CUSTOMER'S MODEL NO.:	CUSTOMER APPROVED:	DATE:	Pin	Pin Description

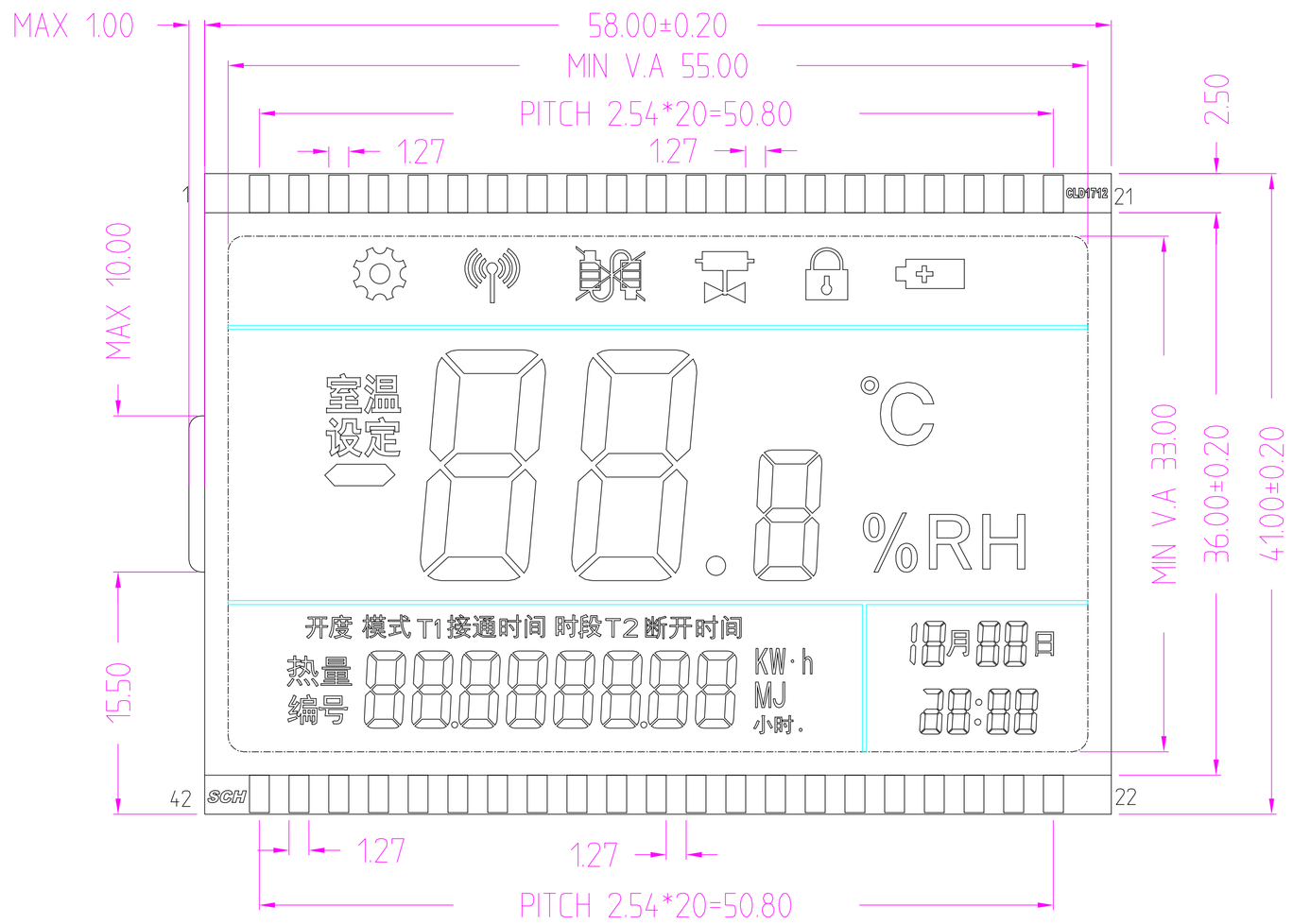

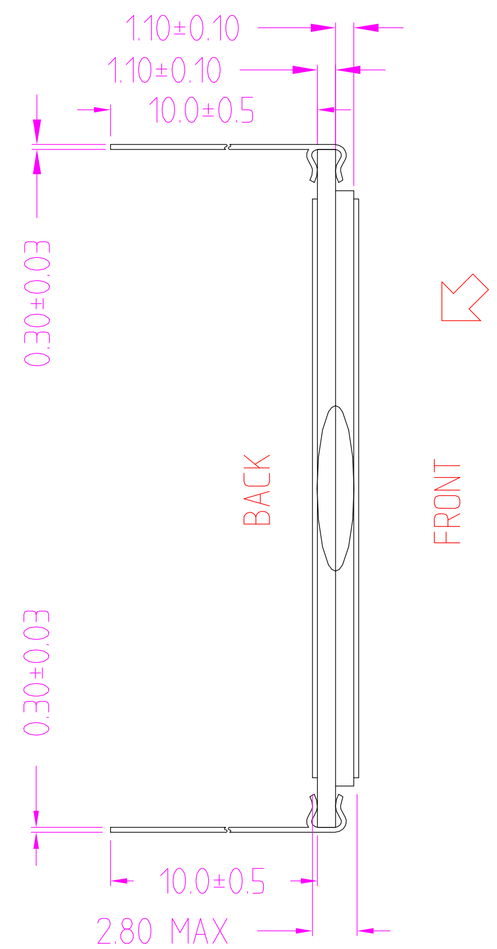

VER	REVISION RECORD	DATE	LCD SPECIFICATION				
1.0	初版发行	2017.09.18	DISPLAY TYPE: STN POSITIVE	VIEWING DIRECTIVE：12:00	北京集辉电子设备制造有限公司 BEIJING ELITE EEM CO.LTD		
			LCD COLOR MODE: YELLOW/GREEN	CONNECTORS: PIN	TITLE：LCD 外形尺寸图		VER: 1.0
			DRIVING METHOD :1/4DUTY,1/3 BIAS	BACK LIGHT: /	FILE NAME: CLD1712SYU-FNE01		SCALE:1:1
			OPERATING VOLTAGE：3.3V	OPERATING TEMP: -30℃+70℃	DRAWING NO. : SCH-RD-PART-17024-LCD-001		UNIT: mm
			FRONT POLARIZER: TRANSMISSIVE	STORAGE TEMP: -40℃-+80℃	DRAWN: H.J.W 2017.09.15	APPROVED:	
			REAR POLARIZER: TRANSFLECTIVE	未注公差：±0.2	CHECKED: P.Z 2017.09.18	DATE:	PAGE: 1/1

CUSTOMER'S MODEL NO.:	CUSTOMER APPROVED:	DATE:	Pin	Pin Description

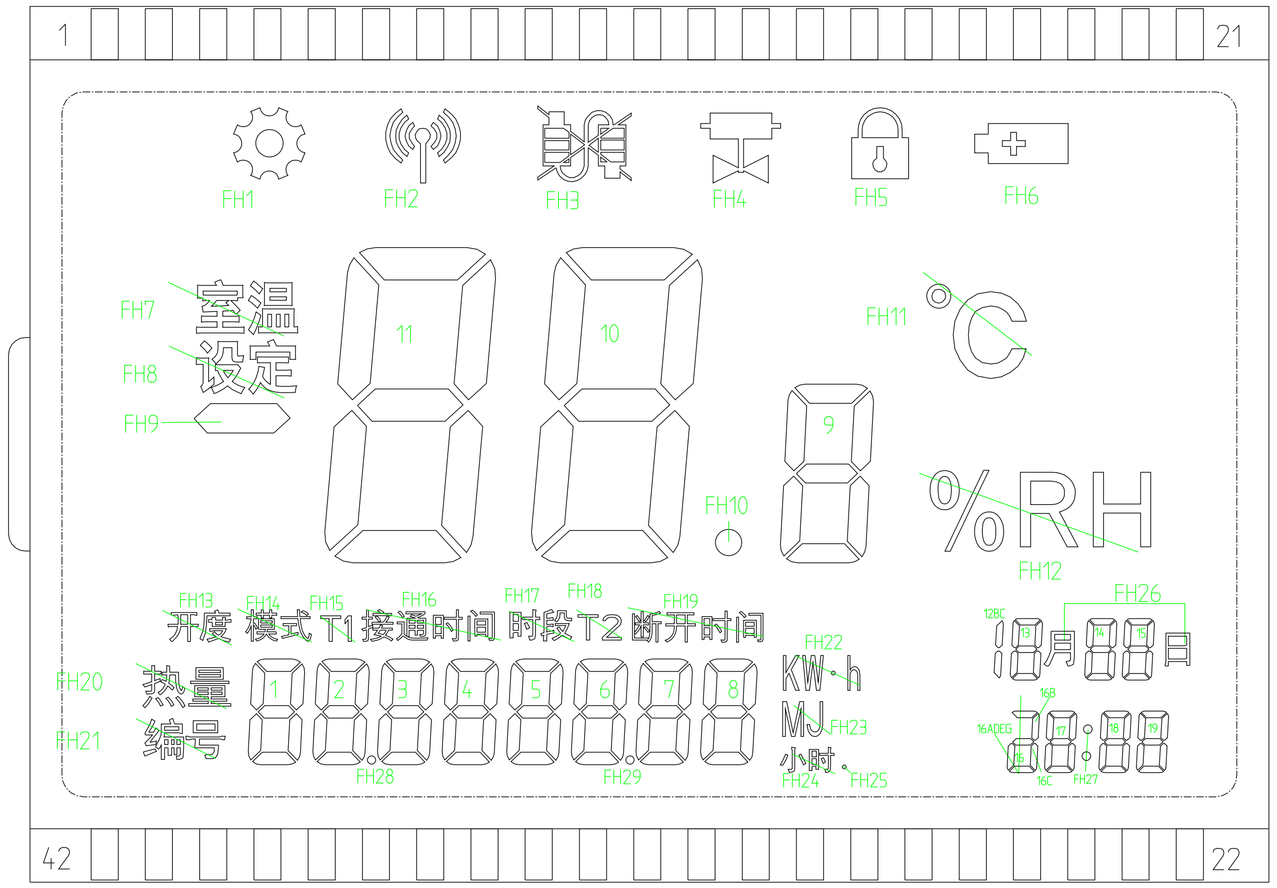

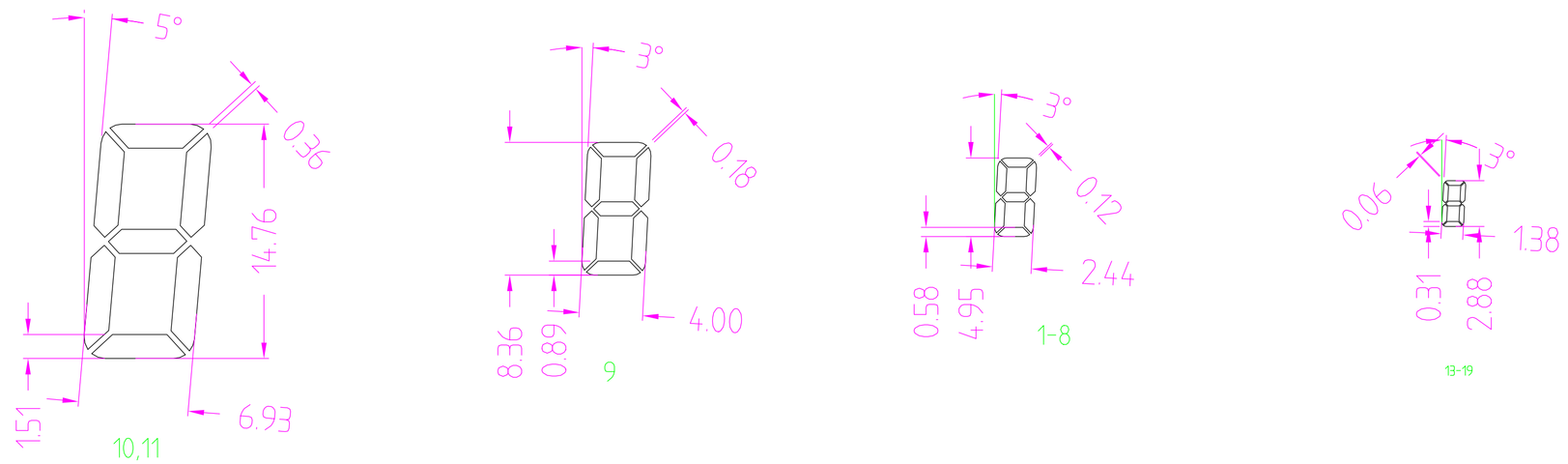

PIN	1	2	3	4	5	6	7	8	9	10	11	12	13	14	15	16	17	18	19	20	21
COM0	FH1	11F	11A	10F	10A	9F	9A	FH4	13F	13A	14F	14A	15F	15A	17F	17A	18F	18A	19F	19A	FH25
COM1	FH7	11G	11B	10G	10B	9G	9B	FH5	13G	13B	14G	14B	15G	15B	17G	17B	18G	18B	19G	19B	FH24
COM2	FH8	11E	11C	10E	10C	9E	9C	FH6	13E	13C	14E	14C	15E	15C	17E	17C	18E	18C	19E	19C	FH23
COM3	FH9	11D	FH2	10D	FH10	9D	FH3	FH11	13D	12BC	14D	FH26	15D	16B	17D	FH27	18D	16C	19D	16AGED	FH22

PIN	22	23	24	25	26	27	28	29	30	31	32	33	34	35	36	37	38	39	40	41	42
COM0	FH12	8D	FH19	7D	FH29	6D	FH18	5D	FH17	4D	FH16	3D	FH28	2D	FH15	1D	FH21				COM0
COM1	8C	8E	7C	7E	6C	6E	5C	5E	4C	4E	3C	3E	2C	2E	1C	1E	FH20			COM1	
COM2	8B	8G	7B	7G	6B	6G	5B	5G	4B	4G	3B	3G	2B	2G	1B	1G	FH13		COM2		
COM3	8A	8F	7A	7F	6A	6F	5A	5F	4A	4F	3A	3F	2A	2F	1A	1F	FH14	COM3			

VER	REVISION RECORD	DATE
1.0	FIRST ISSUE	2017.09.18

LCD SPECIFICATION	
DISPLAY TYPE: STN POSITIVE	VIEWING DIRECTIVE: 12:00
LCD COLOR MODE: YELLOW/GREEN	CONNECTORS: PIN
DRIVING METHOD :1/4DUTY,1/3 BIAS	BACK LIGHT: /
OPERATING VOLTAGE: 3.3V	OPERATING TEMP: -30℃+70℃
FRONT POLARIZER: TRANSMISSIVE	STORAGE TEMP: -40℃-+80℃
REAR POLARIZER: TRANSFLECTIVE	GENERAL TOLERANCE: ±0.2

北京集辉电子设备制造有限公司
BEIJING ELITE EEM CO.LTD

TITLE: LCD真值表		VER: 1.0
FILE NAME: CLD1712SYU-FNE01		SCALE:1:1
DRAWING NO. : SCH-RD-PART-17024-LCD-002		UNIT: mm
DRAWN: J.Y 2017.09.15	APPROVED:	
CHECKED: P.Z 2017.09.18	DATE:	PAGE: 2/3

CUSTOMER'S MODEL NO.:	CUSTOMER APPROVED:	DATE:	Pin	Pin Description

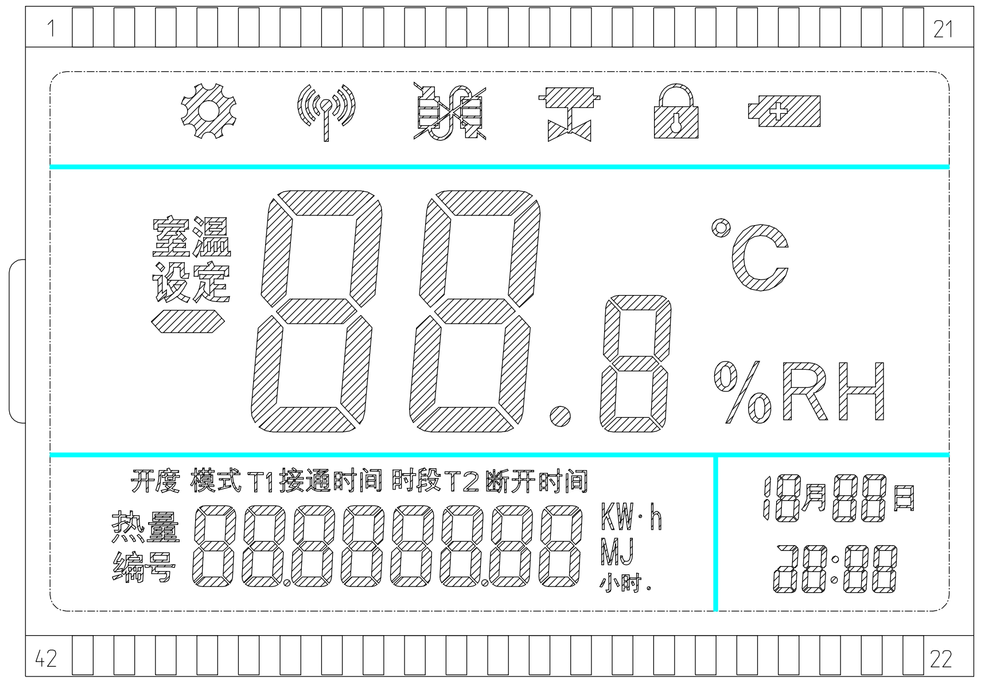

显示效果图

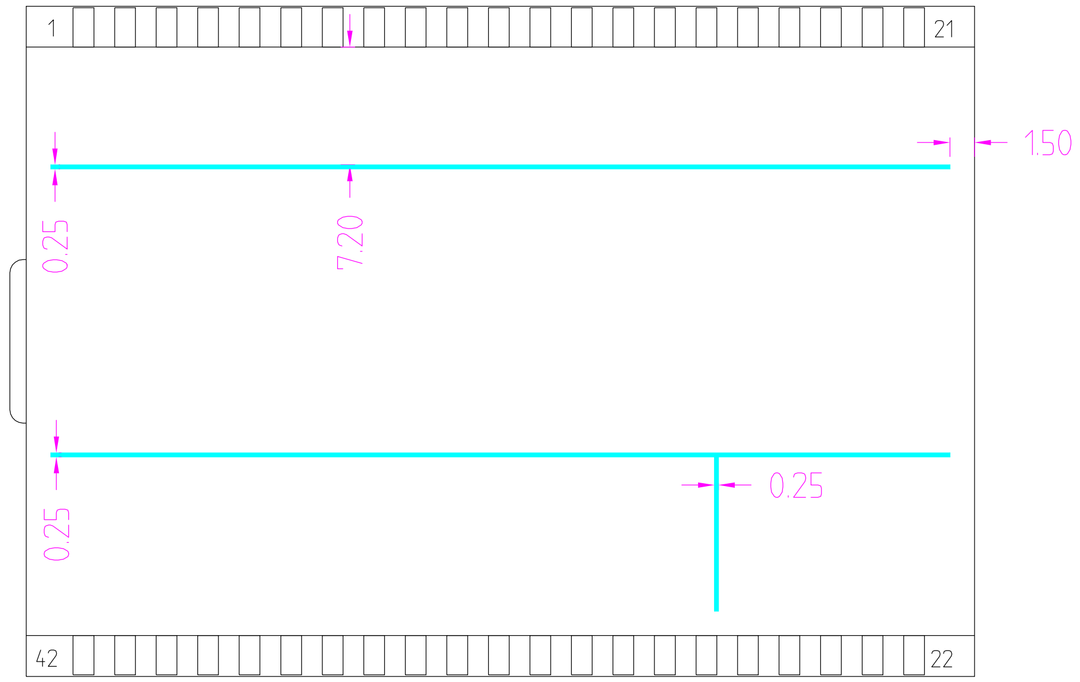

底玻璃黑色外丝印

VER	REVISION RECORD	DATE	LCD SPECIFICATION		北京集粹电子设备制造有限公司 BEIJING ELITE EEM CO.LTD		
1.0	FIRST ISSUE	2017.09.18	DISPLAY TYPE: STN POSITIVE	VIEWING DIRECTIVE：12:00			
			LCD COLOR MODE: YELLOW/GREEN	CONNECTORS: PIN	TITLE：LCD 显示效果图		VER: 1.0
			DRIVING METHOD :1/4DUTY,1/3 BIAS	BACK LIGHT: /	FILE NAME: CLD1712SYU-FNE01		SCALE:1:1
			OPERATING VOLTAGE：3.3V	OPERATING TEMP: -30℃+70℃	DRAWING NO. : SCH-RD-PART-17024-LCD-003		UNIT: mm
			FRONT POLARIZER: TRANSMISSIVE	STORAGE TEMP: -40℃-+80℃	DRAWN: H.J.W 2017.09.15	APPROVED:	
			REAR POLARIZER: TRANSFLECTIVE	GENERAL TOLERANCE：±0.2	CHECKED: P.Z 2017.09.18	DATE:	PAGE: 3/3