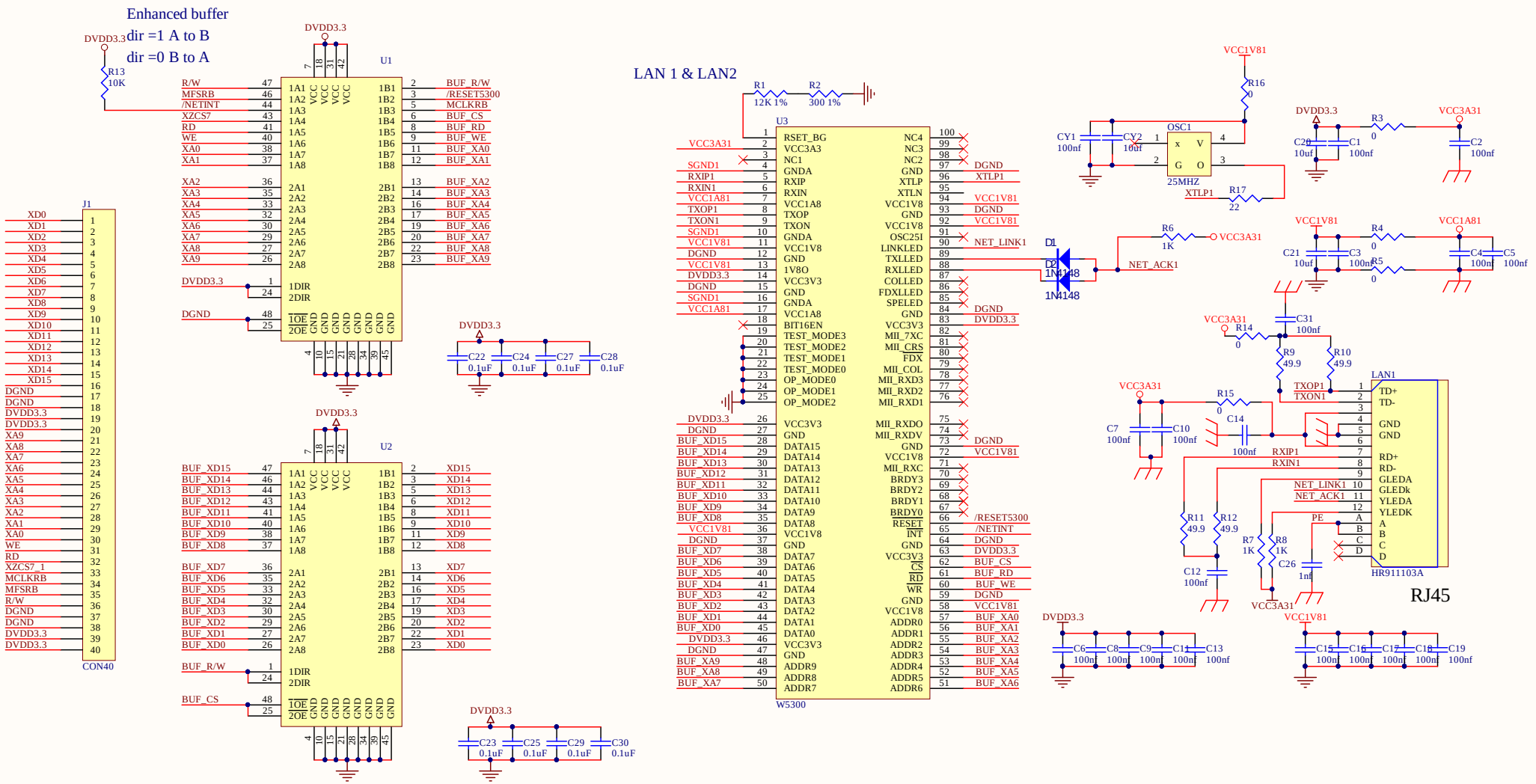

Title		
Size B	Number	Revision
Date: 2020/4/29	Sheet of	
File: F:\lib\ PCB\28335\ \ \W5300.SchDoc	Drawn By:	