An Idle-Stroke Underactuated Gripper with Independent Double-Parallelogram Linkages for Pinching and Adaptive Grasping*

Yizhe Chen
Lab of Robotics, X-Institute
Shenzhen,China
yizhechen2008@163.com

Haotong Luan
Future Tech. School, Shenzhen Tech. Univ.
Shenzhen,China
Lab of Robotics, X-Institute,
Shenzhen, China
lht20060306@outlook.com

Haokai Ding
Future Tech. School, Shenzhen Tech. Univ.
Shenzhen,China
Lab of Robotics, X-Institute,
Shenzhen, China
hk_ding@outlook.com

Wenzeng Zhang*
Lab of Robotics, X-Institute
Shenzhen, China
wenzeng75@163.com
*Corresponding author

***Abstract*—Traditional parallel grippers often require repeated pose adjustments of the robot arm when grasping objects lying on a table, which complicates reliable handling of planar objects with varying sizes. This difficulty mainly arises from the circular fingertip trajectories generated during conventional parallel motion. To overcome this limitation, this paper presents an underactuated idle-stroke gripper that integrates linear parallel and adaptive grasping modes in a single design, called the GPL hand (Grasshopper Link Gripper). A grasshopper-inspired linkage is employed to linearize the fingertip motion, while an independent two-stage parallel four-bar double-parallelogram linkage mechanism constrains the terminal finger segments to maintain a constant orientation during pinching. Furthermore, an idle-stroke transmission with delayed engagement enables a smooth transition from precision pinching to self-adaptive enveloping grasp once contact is established. Both theoretical analysis and experimental validation demonstrate that the proposed gripper achieves robust planar object grasping, wide size adaptability, and reliable performance, making it suitable for industrial grasping applications.**

Keywords—linear parallel grasping, underactuated gripper, Idle-Stroke mechanism, pinching and adaptive grasping

I. INTRODUCTION

The robotic hand is one of the most essential components in modern robotic systems, serving as the primary interface for grasping, manipulating, and interacting with objects across industrial, service, and autonomous scenarios. As robots increasingly operate in unstructured environments, the robustness and adaptability of end-effectors have become critical to ensuring reliable physical interaction. Traditional industrial grippers—such as three-jaw chucks—were originally developed for structured assembly lines, excelling at grasping regular workpieces through parallel closing motions. However, when transferred to real-world settings involving environmental constraints or thin object contact, rigid and purely rotational mechanisms often encounter stability issues and require precise control interventions.

In pursuit of dexterous manipulation, multi-fingered robotic hands have long sought to emulate human-level capability through high degree-of-freedom architectures. Classical designs such as the Utah/MIT hand and other multi-DOF systems demonstrate impressive versatility but suffer from high cost, weight, and control complexity, limiting their large-scale adoption. To address these shortcomings, underactuated mechanisms—characterized by fewer actuators than degrees of freedom—have emerged as an efficient alternative. Their inherent mechanical coupling enables compliant behavior and passive adaptation. Foundational modeling work on underactuated fingers has established analytical frameworks for understanding such mechanisms [1]. Building on this foundation, various researchers have explored mechanisms capable of generating linear fingertip trajectories to overcome the inherent arc-shaped motion of typical rotational joints, including Chebyshev-inspired linkages [2] and other geometric approaches that enhance stability for thin-object grasping [3].

A significant portion of prior work has focused specifically on the challenge of lifting thin or flat objects under environmental constraints. Many designs attempt to manipulate fingertip geometry or contact strategies to penetrate beneath object edges. Serrated fingertips and prying-based strategies have been shown to facilitate thin-object lifting through coordinated finger motion [4], while other studies exploit passive fingertip bending or embedded transmission elements to stabilize grasping on rigid, planar surfaces [5]. Furthermore, additional underactuated grippers have incorporated friction-driven or conveying-surface mechanisms to assist lifting operations in highly constrained settings [6]. Nonetheless, these approaches still typically depend on delicate arm coordination, specialized surface structures, or non-linear fingertip trajectories that complicate grasp planning.

Among adaptive mechanisms, the Omega Hand stands out for demonstrating how passive environmental interaction can be harnessed to achieve robust grasping through mechanical intelligence [7]. Although the design excels in many constrained scenarios, its performance degrades under stepped environments

* This research was supported by the *Student Research Training (P-SRT) and Enhanced Student Research Training (E-SRT)* Fund of Shenzhen X-Institute.

or extreme thin-object conditions. Similar limitations exist in other adaptive grippers that rely on linkage-based linear trajectories: manufacturing complexity or limited environmental adaptability can hinder real-world generalization. Complementary work on hybrid adaptive mechanisms—for example, those integrating flexible belts or multi-mode gripping transitions—highlights the importance of producing consistent linear parallel motion while preserving low-cost control architectures [8].

Despite diverse advances in the field, robotic hands still lack a mechanism that simultaneously provides stable linear parallel pinching, robust environmental interaction, and adaptive grasping within a unified architecture. Recent work on linearly parallel pinching and self-adaptive hybrid grasping demonstrates the advantages of parallelogram-linked linear transmissions for maintaining fingertip orientation during motion [9]. Yet, many existing designs still struggle with thin-object picking, environmental collisions, or reliable switching between grasping modes.

To overcome these challenges, this paper proposes a novel adaptive gripper that integrates linear parallel pinching and adaptive grasping capabilities within a compact mechanical structure, called GPL hand (Grasshopper Link Gripper). The design features a Grasshopper-inspired transmission to generate a near-linear fingertip trajectory and a dual-parallelogram linkage to maintain constant distal-phalanx orientation. By coordinating these mechanisms, the proposed gripper achieves stable linear-pinching behavior during parallel grasping, while enabling compliant adaptation to objects of diverse shapes, sizes, and environmental constraints. This integrated system provides a low-cost, mechanically efficient solution to several limitations inherent in existing underactuated and adaptive gripper designs.

II. Design of the GPL hand

A. Linear Parallel-Pinching Operation

The mechanical structure of the GPL hand is shown in Fig. 1. Each finger is composed of a base-mounted actuation module, a worm–worm-wheel and cam-driven transmission system, and a coordinated multi-link mechanism that shapes the fingertip trajectory during grasping.

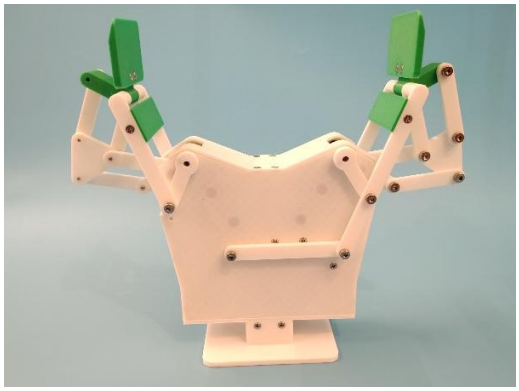

Fig. 1. Grasshopper-Inspired gripper developed in this paper.

A detailed single-finger structure is shown in Fig. 2. The motor is installed inside the Base and drives Gear 2 through a worm–worm-wheel reduction. Gear 2 subsequently actuates the Cam, which engages with the Gear Rack. As the cam rotates, it drives the gear rack in a circular path. The gear rack meshes with Gear 1, producing the rotation of Gear 1. This rotation causes the Short Link to rotate about its fixed axis.

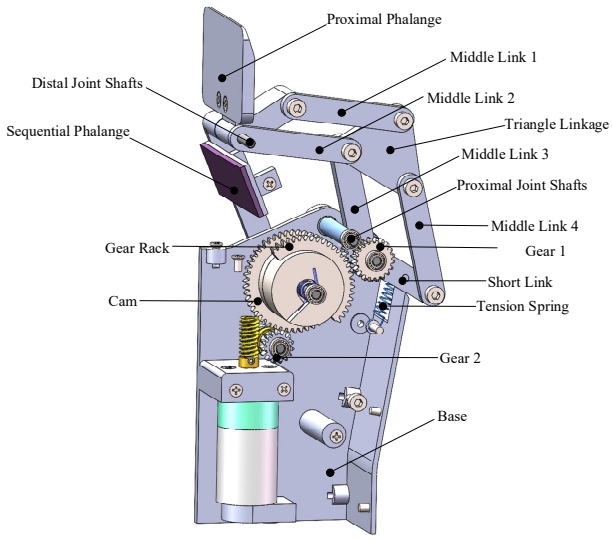

Fig. 2. Grasshopper-Inspired Finger developed in this paper.

The short link is connected to the base by a Tension Spring, which provides a restoring torque that allows the short link to automatically return to its initial position after deformation. As the short link rotates, it pushes the Middle Link, which in turn produces a forward displacement of the Triangle Linkage. The triangle linkage is mechanically coupled to Middle Links 1, 2, and 3, where Middle Link 3 constrains its motion and provides a mechanical stop for the linkage's forward travel. During this transmission process, the triangle linkage drives Middle Links 1 and 2 forward, ultimately causing the Proximal Phalange to advance toward the target object and perform a linear pinching motion.

All links are constrained through Proximal Joint Shafts and Middle Joint Shafts, which define the kinematic pathway of the finger. The rotation of Gear 1 also drives Middle Link 4 through a fixed-axis motion, and Middle Link 4 is part of the coordinated linkage group that includes Middle Links 1–3, the Triangle Linkage, and the Short Link. Together, these linkages determine the fingertip trajectory and ensure that the finger maintains a near-linear pinching path during the initial grasping stage.

The linear parallel-pinching phase concludes when the proximal or distal phalanx first makes contact with the object surface.

B. Self-adaptation

When the Proximal Phalange encounters the object earlier than expected, its motion is immediately constrained by the surface. Despite this contact, the motor continues to drive the cam–gear system, generating additional motion through the linkages. Because the proximal phalanx can no longer follow the original linear path, the additional input causes internal forces to accumulate in the linkage network.

Once this force reaches a critical threshold, the geometry of the linkage assembly transitions into its second kinematic mode. The Triangle Linkage, together with the Middle Links and the Short Link, begins to reconfigure, redirecting motion into the distal rotational degree of freedom. As a result, the Sequential Phalange rotates about the Distal Joint Shafts, sweeping inward until it establishes contact with the object.

This mechanically triggered, two-stage behavior—linear parallel motion followed by adaptive rotation—occurs without the need for sensors, feedback control, or preplanned contact strategies. The adaptive behavior is achieved purely through mechanical compliance, preloaded elasticity, and the intrinsic design of the linkage system.

III. Analysis of The GPL hand

This section analyzes the independent double-parallelogram mechanism and the idle-stroke transmission principle of the GPL hand. The structural configuration of the dual parallelogram mechanism is explained in detail, along with the operational principle through which the idle-stroke transmission enables motion decoupling. In the simplified model, gravitational effects on the finger components and friction between phalanges are neglected.

A. Parallelogram Mechanism Analysis

As shown in Fig. 3, the independent dual-parallelogram linkage is designed to ensure that the distal phalanx maintains a fixed orientation throughout the grasping process, enabling a highly linear fingertip trajectory and preserving stable geometric constraints when transitioning into the adaptive grasping phase. By employing two independent parallelogram constraints working in coordination, the distal phalanx maintains a highly consistent orientation during the entire linear pinching stage, significantly improving trajectory straightness and controllability.

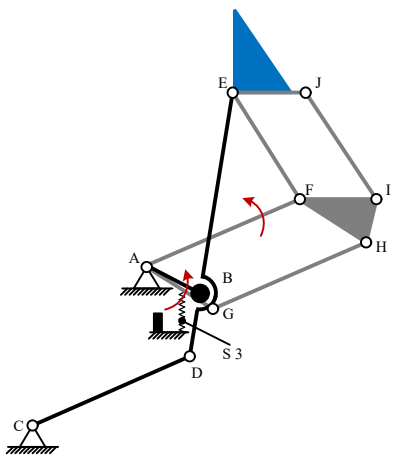

Fig. 3. Diagram of the Independent Parallelogram Linkage Mechanism.

The parallelogram linkage E–J–F–I is responsible for maintaining the orientation of the distal phalanx and preventing undesired rotation, while the parallelogram linkage A–G–F–H constrains the overall linear characteristics of the fingertip trajectory and reduces coupling deviations during motion. These two parallelogram mechanisms are interconnected through the triangular linkage F–I–H. During the enveloping phase of the grasping process, link AG rotates counterclockwise about point A. Through the parallelogram transmission, this motion increases the angle between link EJ and the horizontal plane, enabling the fingertip to tilt and achieve the enveloping effect. The tension spring S3 ensures that the dual-parallelogram mechanism automatically returns to its initial position after deformation.

The linkage mechanism C–D–B–E–A, with carefully selected link-length proportions and pivot constraints, maintains a linear fingertip trajectory during displacement. Under the constraint of link CD, link ED rotates counterclockwise about pivot B while ensuring that point E always moves leftward along the horizontal direction, thereby producing the fingertip's horizontal linear motion. The combined effect of the C–D–B–E–A linkage and the dual-parallelogram linkage results in the distal phalanx exhibiting an approximately pure translational motion within the driving chain.

In addition to governing the linear motion stage, the dual-parallelogram mechanism works collaboratively with the idle-stroke transmission to maintain structural stability when the gripper transitions into adaptive grasping. During the first stage, the dual parallelograms maintain the distal phalanx orientation and ensure linear motion. Once the idle stroke is triggered and the mechanism enters the second stage, the parallelogram structure allows the distal phalanx to rotate in a predetermined direction. This rotation is passively activated, requiring neither sensors nor external control strategies, enabling a natural transition into the adaptive grasping mode. This integration achieves a continuous motion sequence from linear parallel pinching to adaptive enveloping, allowing smooth switching between the two grasping modes.

B. Principle of idle-stroke transmission

The GPL hand's uniquely designed idle-stroke transmission endows it with phase-based motion and highly linear movement characteristics.

As illustrated in Fig. 4, during the first phase, an intentionally introduced idle stroke between the input and output motions ensures that the output link remains stationary until a specific triggering condition is met. In this stage, the mechanism executes only linear parallel-pinching motion.

The motor drives the worm, which in turn rotates $Gear_0$. Since $Link_1$ is rigidly attached to $Gear_0$, it rotates simultaneously, causing Z_{11} and Z_{12} to rotate along with it. The rotation of Z_{11} and Z_{12} further drives Z_{21} and Z_{22}, which are rigidly connected to $Link_2$. During this motion, Z_{21} and Z_{22} rotate while maintaining a separation between Z_3 and Z_4, meaning no engagement occurs between them.

Meanwhile, the right-hand torsion spring begins to compress, generating torque and releasing linear elastic force that maintains the overall linearity of the mechanism's motion. Subsequently, Z_{22} engages with Z_5, further driving the rotation of $Link_3$. Since $Link_3$ is fixed to the parallel-linkage components, this rotation induces a coordinated transformation of the entire parallelogram structure, allowing the gripper to continue performing the linear parallel-pinching action.

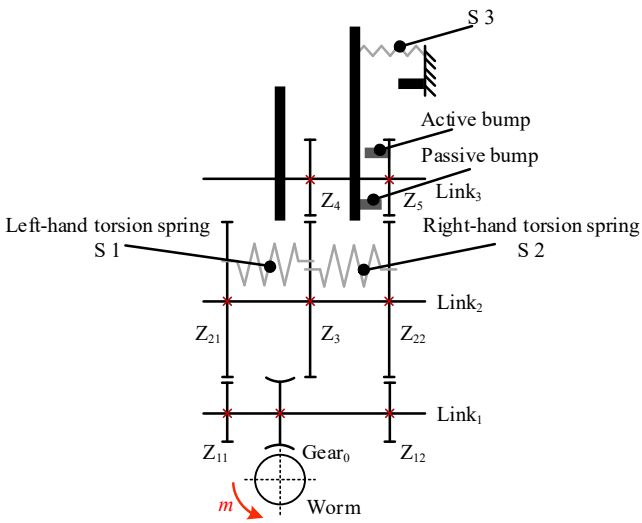

Fig. 4. Schematic Diagram of Idle-stroke Transmission.

During the second phase, as the parallelogram linkages continue to move, Z_3 eventually contacts and engages with Z_4, thereby triggering the end of the idle stroke. At this moment, the left-hand torsion spring begins to compress, generating torque opposite to that produced by the right-hand torsion spring in the previous phase. The resulting elastic force likewise maintains the linearity of motion as the mechanism transitions into the adaptive grasping mode, enabling the finger to wrap around the object until full contact is achieved.

By introducing a controllable idle stroke between the input and output stages, the idle-stroke transmission mechanism enables a seamless transition from linear parallel pinching to adaptive grasping. This allows the GPL hand to passively switch operating modes and maintain stable grasping without the need for sensors or complex control strategies.

IV. Experiments of the GPL hand

To evaluate the practicality and robustness of the proposed mechanism, we fabricated and assembled a complete working prototype. Throughout the prototyping process, particular care was taken to preserve kinematic compatibility across all motion pairs and to maintain tight dimensional control so that linkage alignment and contact conditions matched the intended design. The principal structural components—including the housing, base, and anthropomorphic finger links—were produced via fused deposition modeling using a high-precision desktop 3D printer. PLA was chosen as the fabrication material due to its favorable balance of rigidity, strength, ease of printing, and overall economic efficiency, making it well suited for iterative prototyping and experimental validation. Fine-resolution print settings and a stable infill configuration were adopted to enhance surface uniformity and geometric accuracy. This ensured that the assembled mechanism exhibited smooth motion transmission and reliable interaction between all gear and linkage elements, thereby supporting the subsequent grasping experiments.

As shown in Fig. 5, the GPL hand successfully performs stable linear translation, confirming the effectiveness of the proposed mechanical architecture. Throughout this motion, the gripper maintains a consistent fingertip orientation, indicating that the integrated linkage system provides sufficient geometric constraints to guide the fingertip along the intended straight-line path.

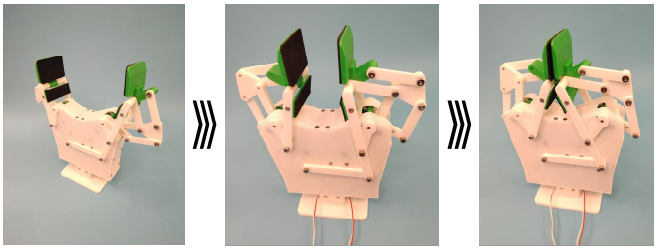

Fig. 5. Linear parallel pinching process of the GPL hand.

This linearity is essential for high-precision tasks, where unintended rotational drift or trajectory deviation could compromise grasp reliability. Such capability enables the gripper to handle objects in scenarios that require accurate alignment—such as industrial pick-and-place operations, assembly tasks, or the manipulation of delicate items commonly encountered in medical and service robotics. The experimental results validate that the gripper can execute the linear approach phase with high consistency, laying the foundation for reliable grasping performance in real-world applications.

As shown in Fig. 6, the GPL hand exhibits stable grasping performance across a variety of everyday objects. This robustness arises from its dual operational behavior: a linear parallel grasp suitable for symmetric or regular items, and an adaptive grasp that allows the fingers to conform to objects with complex geometries.

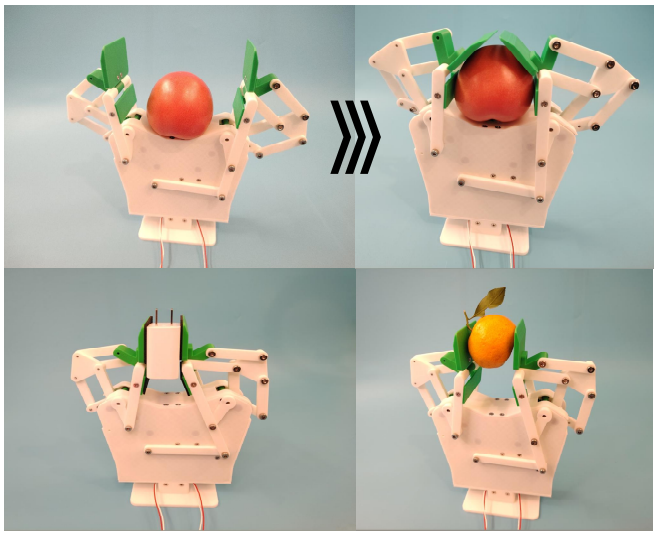

Fig. 6. Different grasping modes of the GPL hand for different objects.

The linear mode preserves fingertip alignment along a straight path, whereas the adaptive mode enables the fingers to adjust their configuration according to the object's contour, thereby improving grasp security. To assess the adaptive performance of the gripper, experiments were conducted using

a tomato, a charger, and an orange as representative test objects with differing shapes and surface characteristics.

During grasping, the middle phalange automatically retracted from the object to accommodate its curvature or irregular features, while the distal phalange rotated inward to establish stable contact. This coordinated motion clearly demonstrates the gripper's ability to adapt its shape based solely on mechanical interaction. The observed behavior is enabled by the passive compliance provided by the internal spring elements and the geometric constraints of the driving linkage system. Together, these mechanisms allow the fingers to reconfigure dynamically in response to the object's shape, enabling reliable grasping across a diverse set of targets.

V. CONCLUSIONS

This paper proposes a novel adaptive gripper that integrates the dual capabilities of linear parallel grasping and passive adaptive grasping within a single, mechanically efficient structure. The GPL hand achieves a highly linear fingertip trajectory through a Grasshopper-inspired linkage, enabling precise parallel alignment during the initial grasping phase. Meanwhile, the incorporation of a two-stage pantograph mechanism ensures that the distal phalanx maintains a fixed orientation relative to the base, effectively eliminating undesired rotation during motion. Beyond linear grasping, the gripper also leverages an idle-stroke transmission mechanism that is automatically triggered upon object contact, allowing it to transition seamlessly into an adaptive grasping mode without the need for sensing or complex control strategies.

This work provides a thorough description of the GPL hand's architecture, key mechanical components, and operational principles. Detailed mechanical and mathematical models are developed to analyze the finger motion, force transmission characteristics, and the conditions under which adaptive behavior emerges. These models offer valuable insight into the gripper's kinematic consistency and mechanical robustness.

Experimental evaluations further validate the proposed design. The gripper successfully performs linear pinching and adaptive grasping across objects with diverse shapes, surface geometries, and stiffness characteristics. The results confirm not only the feasibility of the mechanism but also its practical potential for real-world deployment. The combination of structural simplicity, low control effort, and reliable grasping performance positions this gripper as a promising solution for industrial automation, service robotics, and other applications requiring dependable object manipulation.

Overall, the proposed GPL hand demonstrates that carefully coordinated mechanical design can achieve multi-mode grasping behavior traditionally reliant on sensing or active control, highlighting new opportunities for the development of efficient, robust, and adaptable robotic end-effectors.

REFERENCES

[1] L. Birglen, C. M. Gosselin,"Kinetostatic Analysis of Underactuated Fingers," IEEE Trans. on Robotics, vol. 20, no. 2, pp. 211–221, Apr. 2004.

[2] J. Xu et al., "LPSA underactuated mode of linearly parallel and selfadaptive grasping in the CLIS robot hand with Chebyshev linkage and idle stroke," 2017 2nd Inter. Conf. on Advanced Robotics and Mechatronics (ICARM), Hefei and Tai'an, China, 2017.

[3] E. Brown, N. Rodenberg, J. Amend, et al., "Universal Robotic Gripper Based on the Jamming of Granular Material," Proc. of the National Academy of Sciences, vol. 107, no. 44, pp. 18809–18814, 2010.

[4] L. U. Odhner, R. R. Ma, and A. M. Dollar, "Open-loop precision grasping with underactuated hands inspired by a human manipulation strategy," IEEE Trans. Autom. Sci. Eng., Jul. 2013.

[5] V. Babin.et al., "Stable and repeatable grasping of flat objects on hard surfaces using passive and epicyclic mechanisms," Robotics and Computer Integrated Manufacturing, vol. 55, pp. 1–10, 2019.

[6] T. Ko, "A tendon-driven robot gripper with passively switchable underactuated surface and its physics simulation-based parameter optimization," IEEE Robotics and Automation Letters, 2020.

[7] D. Yoon, K. Kim, "Fully Passive Robotic Finger for Human-Inspired Adaptive Grasping in Environmental Constraints," IEEE/ASME Trans. on Mechatronics, vol. 27, pp. 3841–3852, 2022.

[8] E. Brown, N. Rodenberg, J. Amend, et al., "Universal Robotic Gripper Based on the Jamming of Granular Material," Proc. of the National Academy of Sciences, vol. 107, no. 44, pp. 18809–18814, 2010.

[9] S. Chen, B. Zhang, K. Feng, Y. Wang, J. Li, W. Zhang, "A Novel Geometrical Structure Robot Hand for Linear-Parallel Pinching and Coupled Self-Adaptive Hybrid Grasping," Proc. IEEE/RSJ Int. Conf. Intell. Robots Syst. (IROS), Abu Dhabi, UAE, pp. 3030–3036, Oct. 2024.