CGA 1/6

File: CGA_1_6.kicad_sch

CGA 2/6

File: CGA_2_6.kicad_sch

CGA 3/6

File: CGA_3_6.kicad_sch

CGA 4/6

File: CGA_4_6.kicad_sch

CGA 5/6

File: CGA_5_6.kicad_sch

CGA 6/6

File: CGA_6_6.kicad_sch

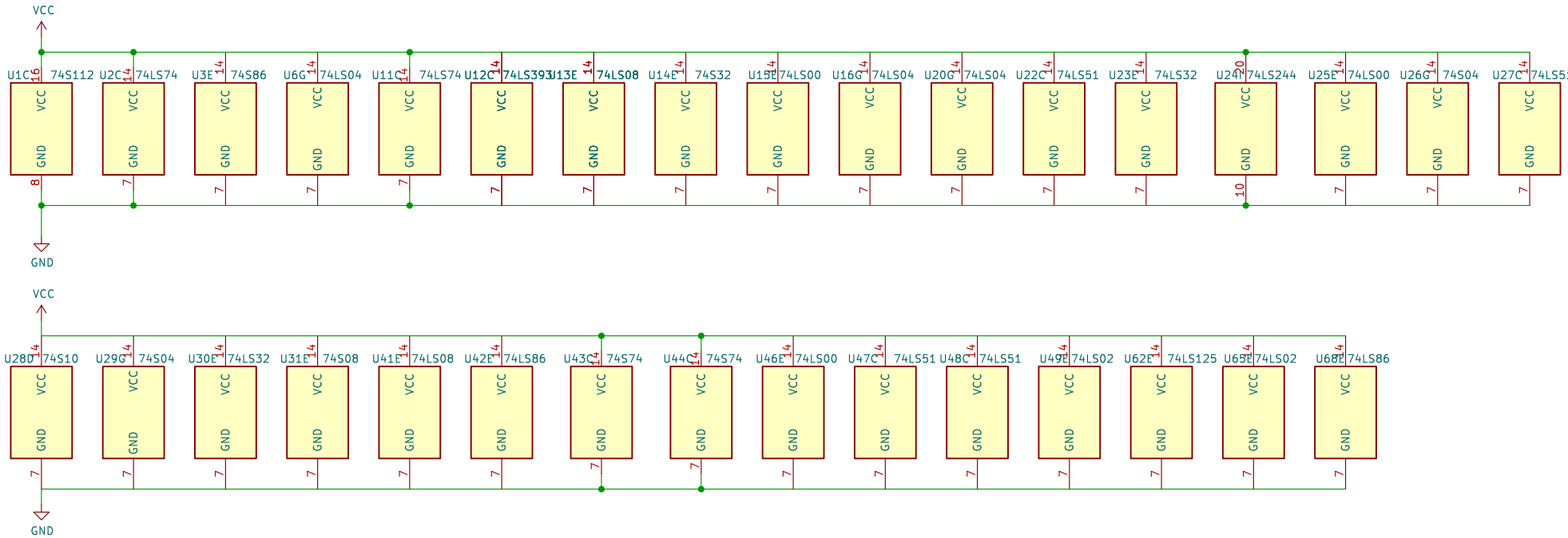

Sheet: /
File: ISA_CGA.kicad_sch

Title:

Size: A4	Date:	**Rev:**
KiCad E.D.A. kicad 7.0.8		Id: 1/7

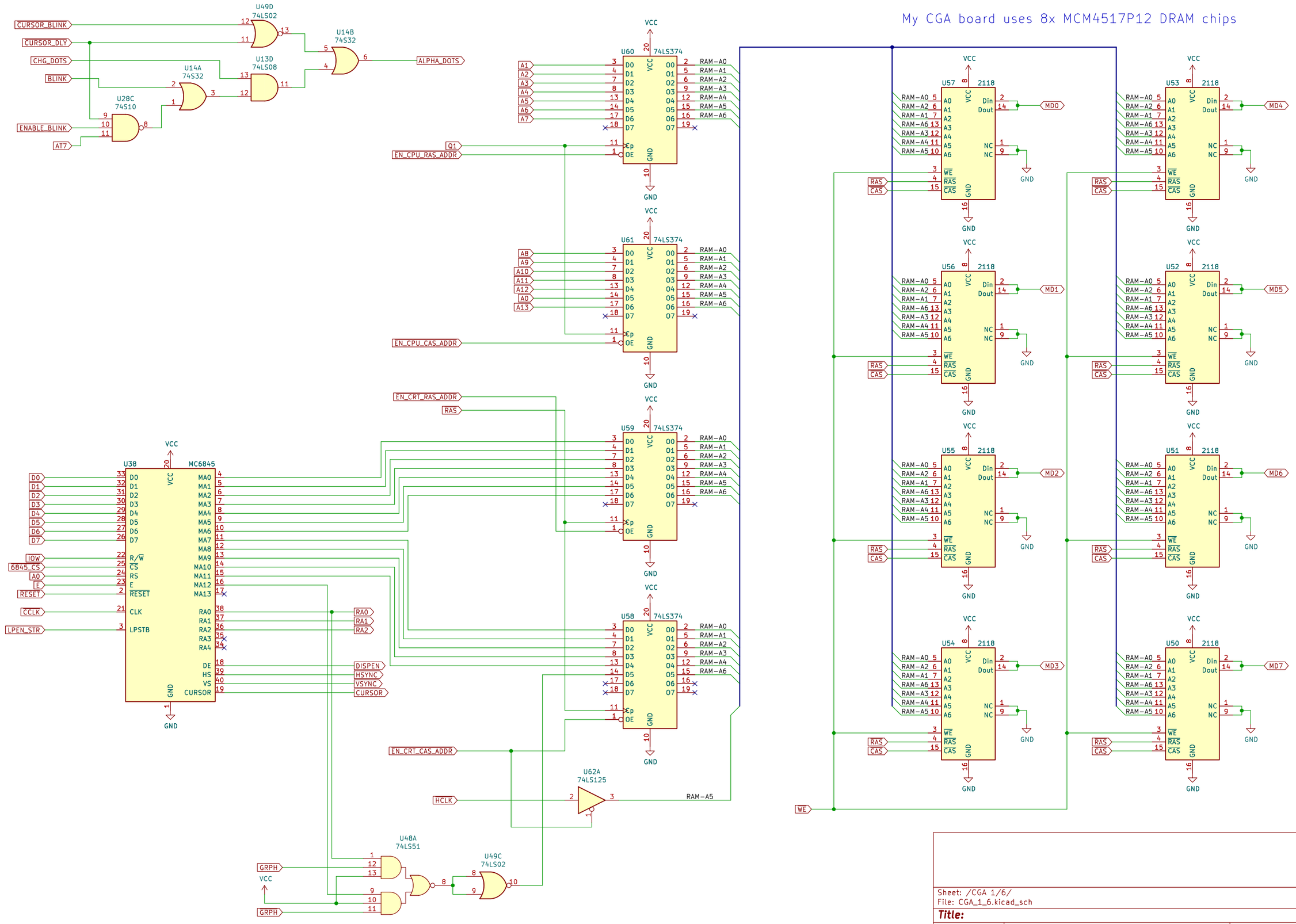

Sheet: /CGA 1/6/
File: CGA_1_6.kicad_sch

Title:

Size: A3	Date:	Rev:
KiCad E.D.A. kicad 7.0.8		Id: 2/7

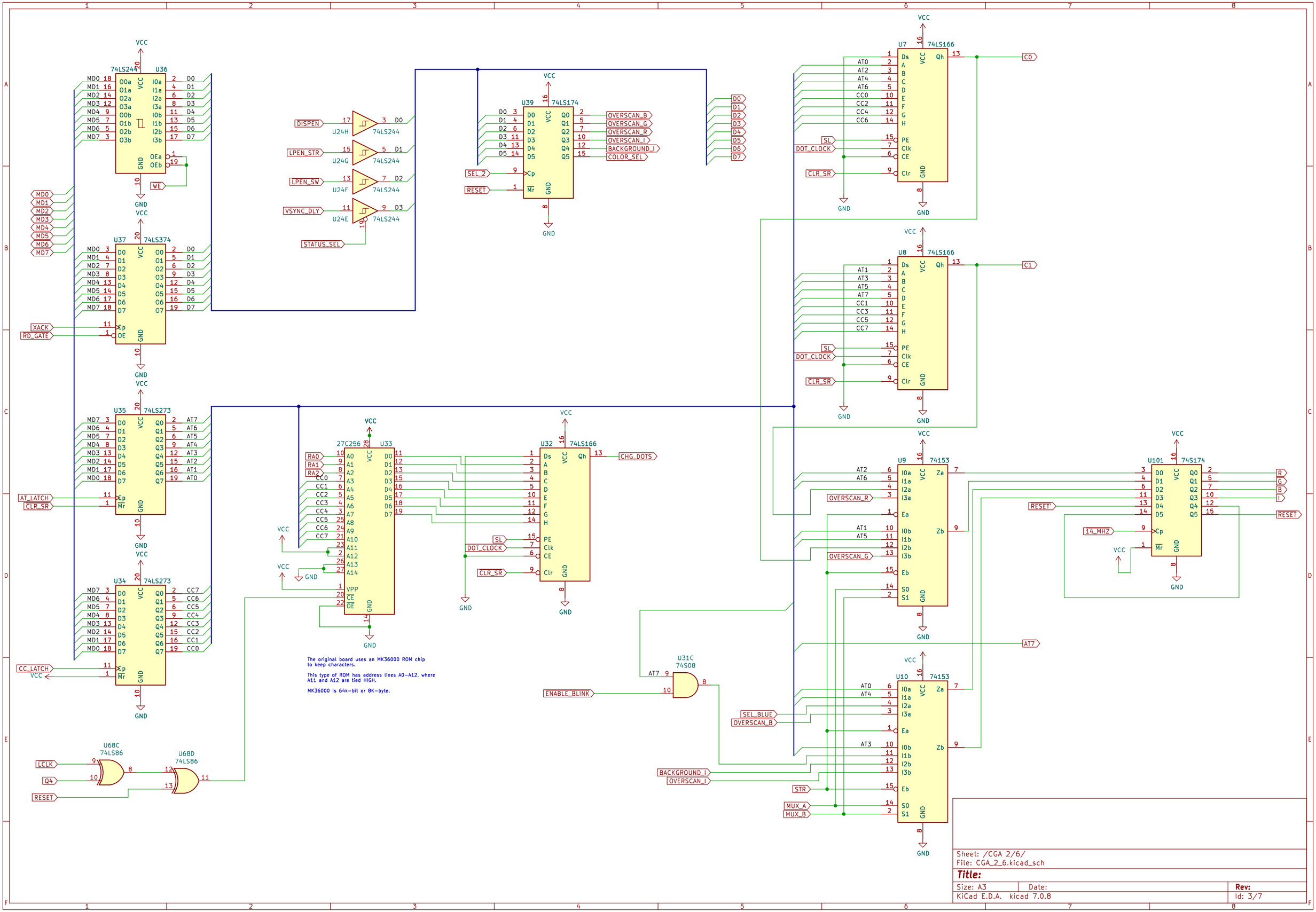
74LS244
U36
74LS374
U37
74LS273
U35
U34
74LS174
U39
74LS166
U7
U8
27C256
U33
U32
74153
U9
U10
U101
U68C
74LS86
U68D
U31C
74S08
DISPEN
LPEN_STR
LPEN_SW
VSYNC_DLY
STATUS_SEL
OVERSCAN_B
OVERSCAN_G
OVERSCAN_R
OVERSCAN_I
BACKGROUND_I
COLOR_SEL
CHG_DOTS
ENABLE_BLINK
SEL_BLUE
STR
MUX_A
MUX_B
DOT_CLOCK
CLR_SR
AT_LATCH
CC_LATCH
XACK
RD_GATE
WE
LCLK
Q4
RESET
14_MHZ
The original board uses an MK36000 ROM chip to keep characters.
This type of ROM has address lines A0–A12, where A11 and A12 are tied HIGH.
MK36000 is 64k-bit or 8K-byte.
Sheet: /CGA 2/6/
File: CGA_2_6.kicad_sch
Title:
Size: A3
Date:
Rev:
KiCad E.D.A. kicad 7.0.8
Id: 3/7

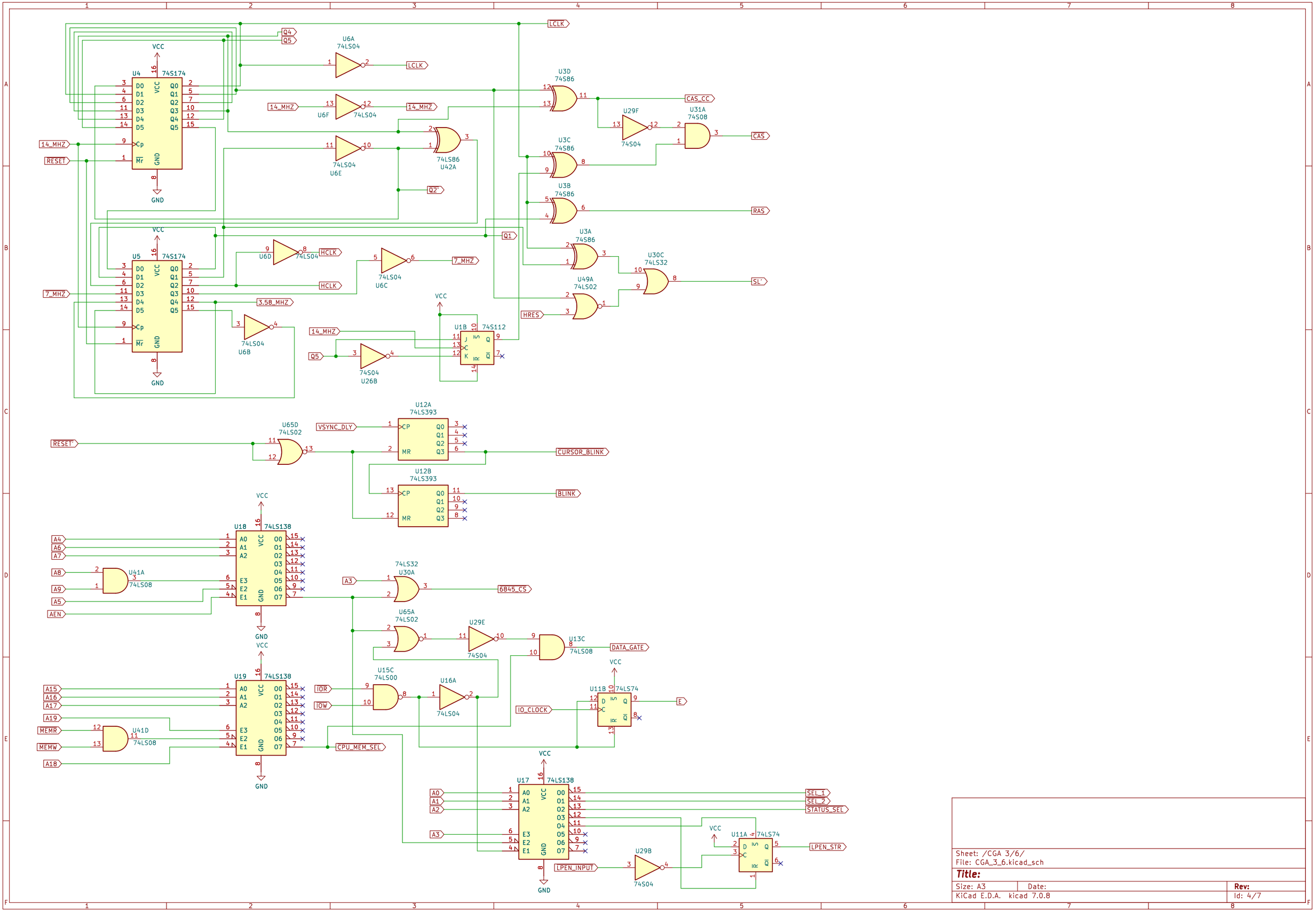

Sheet: /CGA 3/6/
File: CGA_3_6.kicad_sch

Title:

Size: A3	Date:	Rev:
KiCad E.D.A. kicad 7.0.8		Id: 4/7

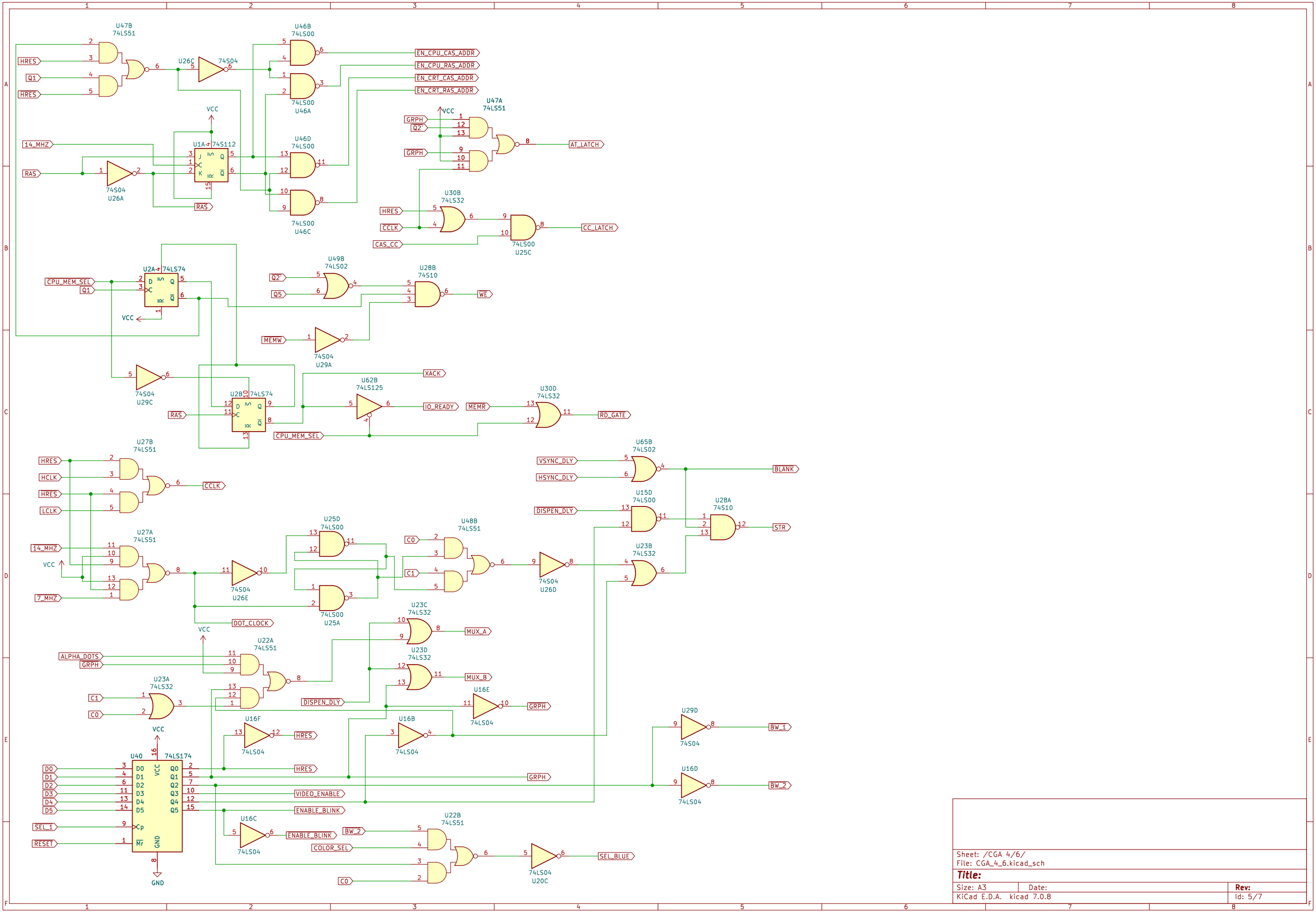

Sheet: /CGA 4/6/
File: CGA_4_6.kicad_sch

Title:

Size: A3	Date:	Rev:
KiCad E.D.A. kicad 7.0.8		Id: 5/7

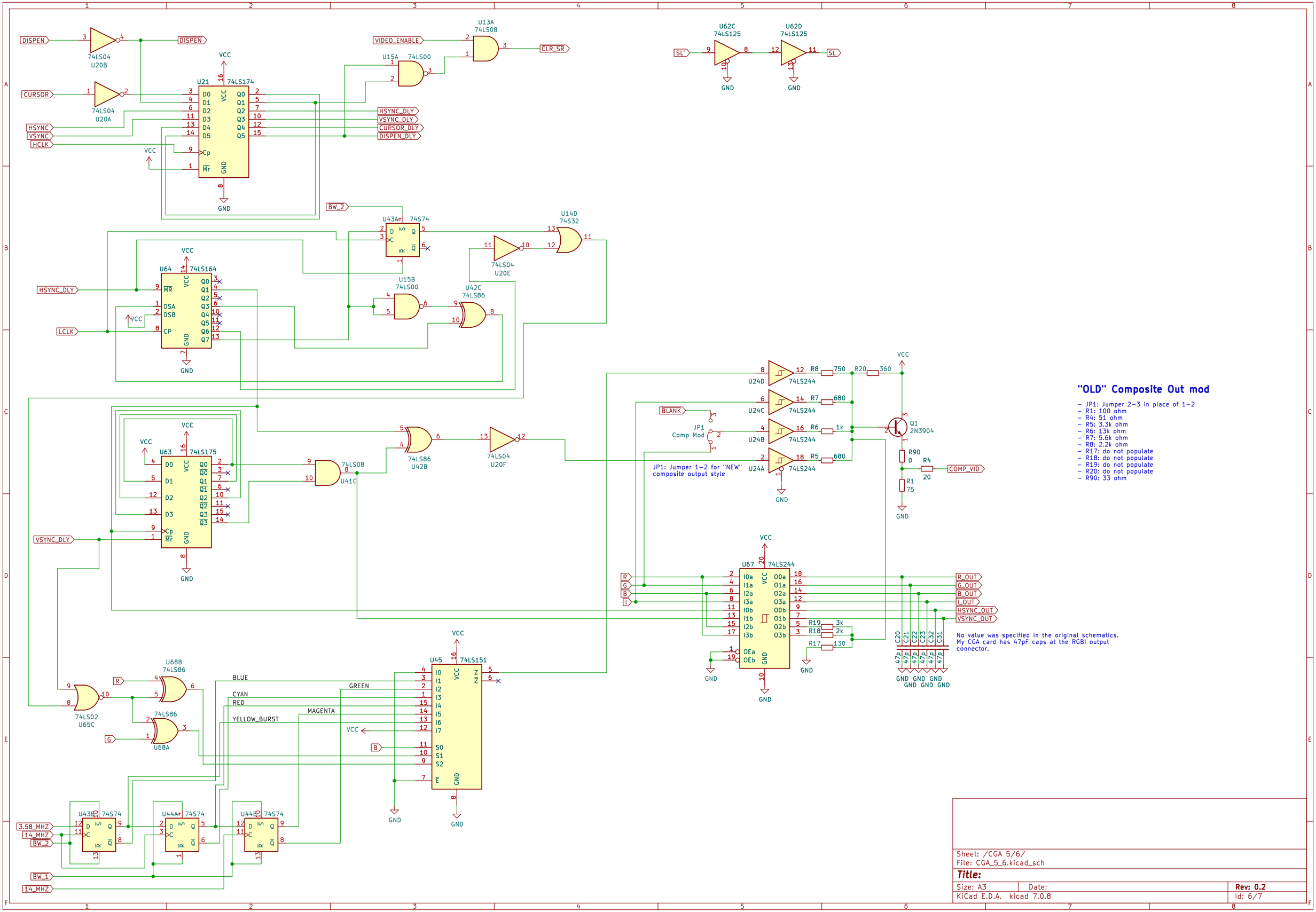

Sheet: /CGA 5/6/
File: CGA_5_6.kicad_sch

Title:

Size: A3	Date:	Rev: 0.2
KiCad E.D.A. kicad 7.0.8		Id: 6/7

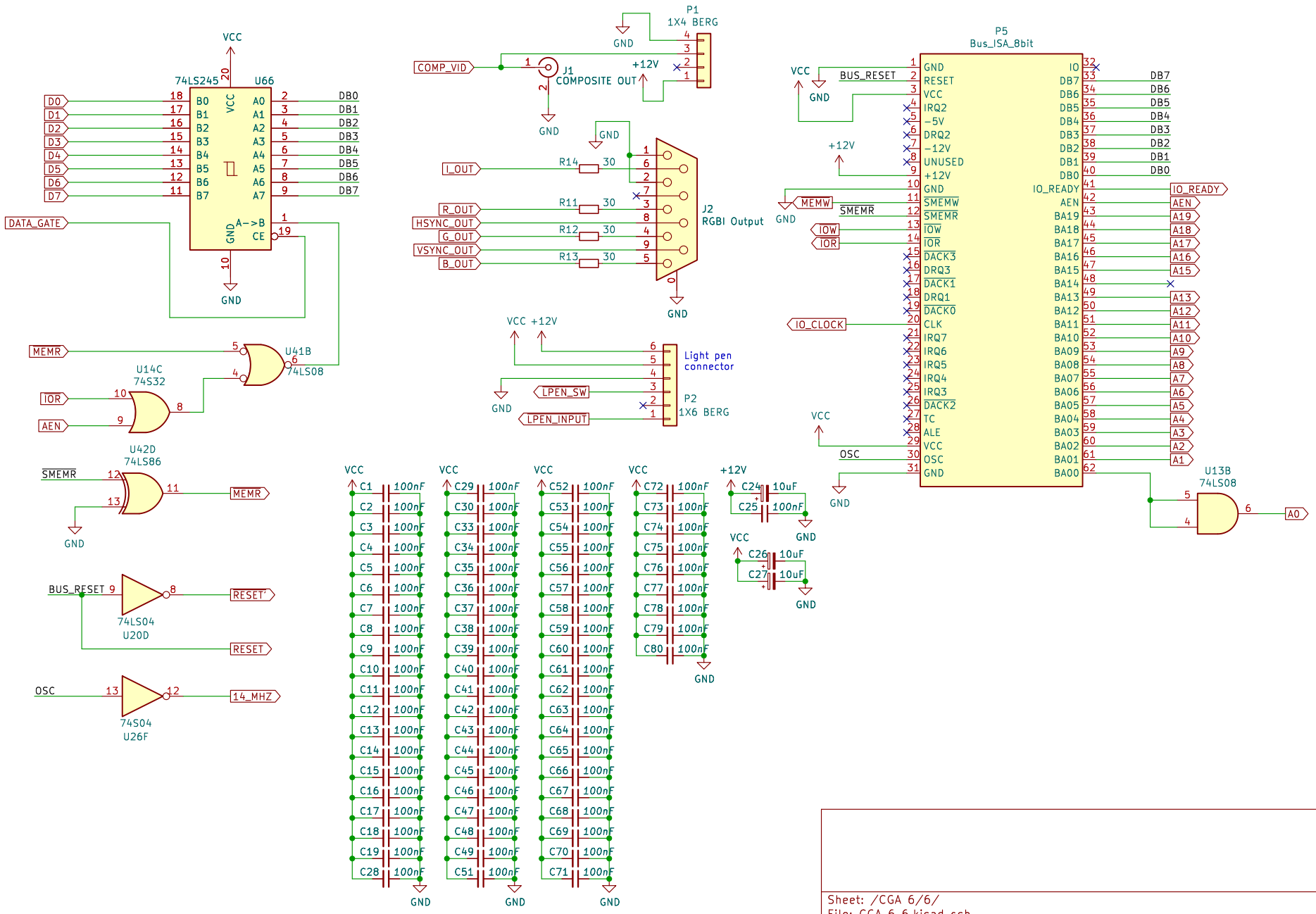

Sheet: /CGA 6/6/
File: CGA_6_6.kicad_sch

Title:

Size: A4	Date:	Rev:
KiCad E.D.A. kicad 7.0.8		Id: 7/7