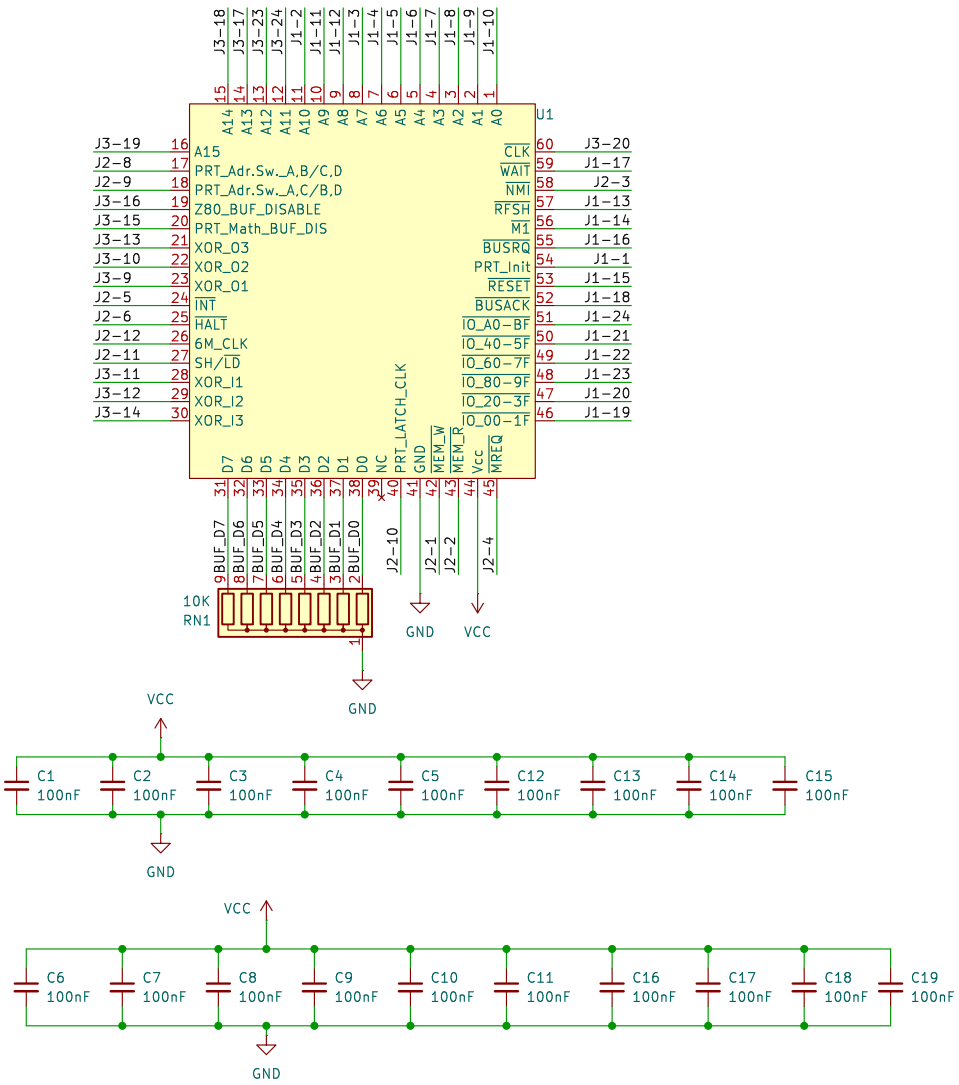

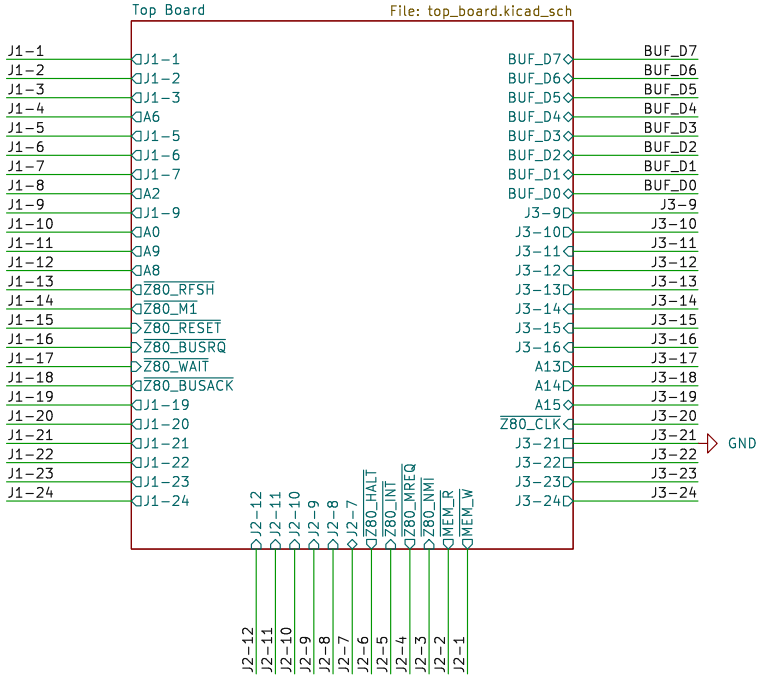

Sheet: /
File: MSP-MDC.kicad_sch

Title:

Size: A4	Date:	Rev:
KiCad E.D.A. 8.0.4		Id: 1/3

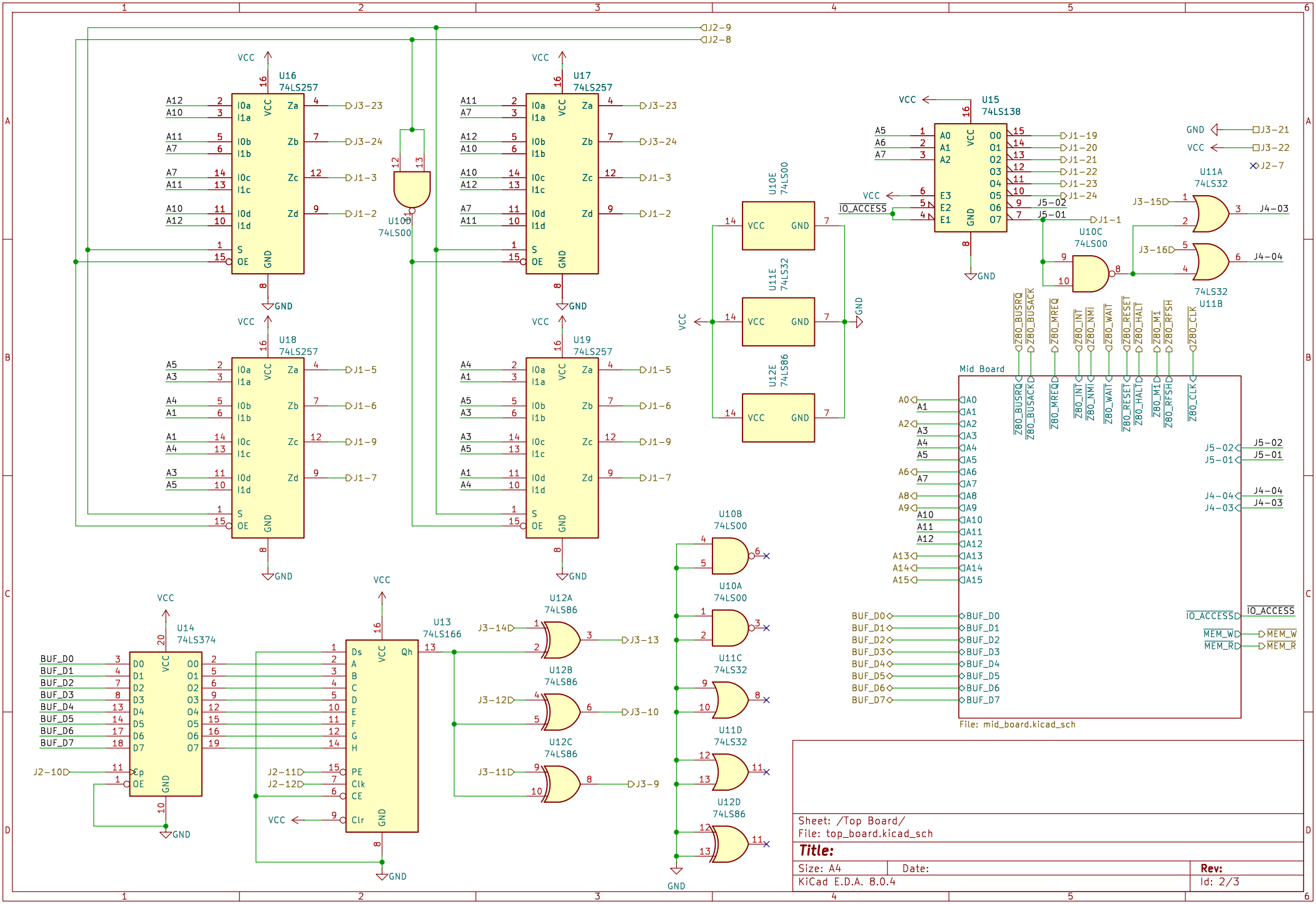

Sheet: /Top Board/
File: top_board.kicad_sch

Title:

Size: A4	Date:	Rev:
KiCad E.D.A. 8.0.4		Id: 2/3

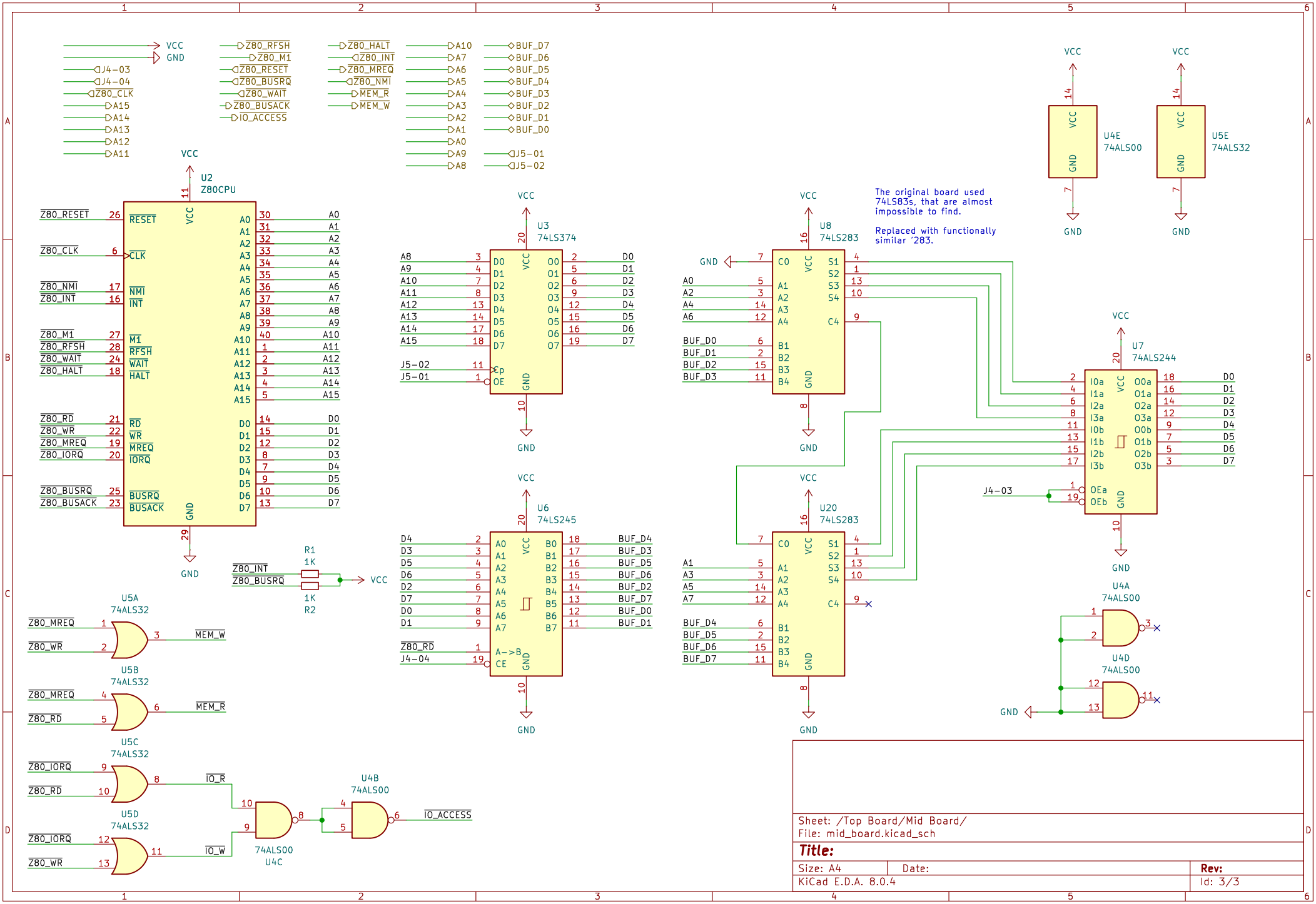
VCC
GND
J4-03
J4-04
Z80_CLK
A15
A14
A13
A12
A11
Z80_RFSH
Z80_M1
Z80_RESET
Z80_BUSRQ
Z80_WAIT
Z80_BUSACK
IO_ACCESS
Z80_HALT
Z80_INT
Z80_MREQ
Z80_NMI
MEM_R
MEM_W
A10
A7
A6
A5
A4
A3
A2
A1
A0
A9
A8
BUF_D7
BUF_D6
BUF_D5
BUF_D4
BUF_D3
BUF_D2
BUF_D1
BUF_D0
J5-01
J5-02
U2
Z80CPU
U3
74LS374
U8
74LS283
U7
74LS244
U6
74LS245
U20
74LS283
U4E
74ALS00
U5E
74ALS32
The original board used 74LS83s, that are almost impossible to find.
Replaced with functionally similar '283.
R1
1K
R2
1K
U5A
74ALS32
U5B
74ALS32
U5C
74ALS32
U5D
74ALS32
U4B
74ALS00
74ALS00
U4C
U4A
74ALS00
U4D
74ALS00
MEM_W
MEM_R
IO_R
IO_W
IO_ACCESS
Sheet: /Top Board/Mid Board/
File: mid_board.kicad_sch
Title:
Size: A4
Date:
Rev:
KiCad E.D.A. 8.0.4
Id: 3/3