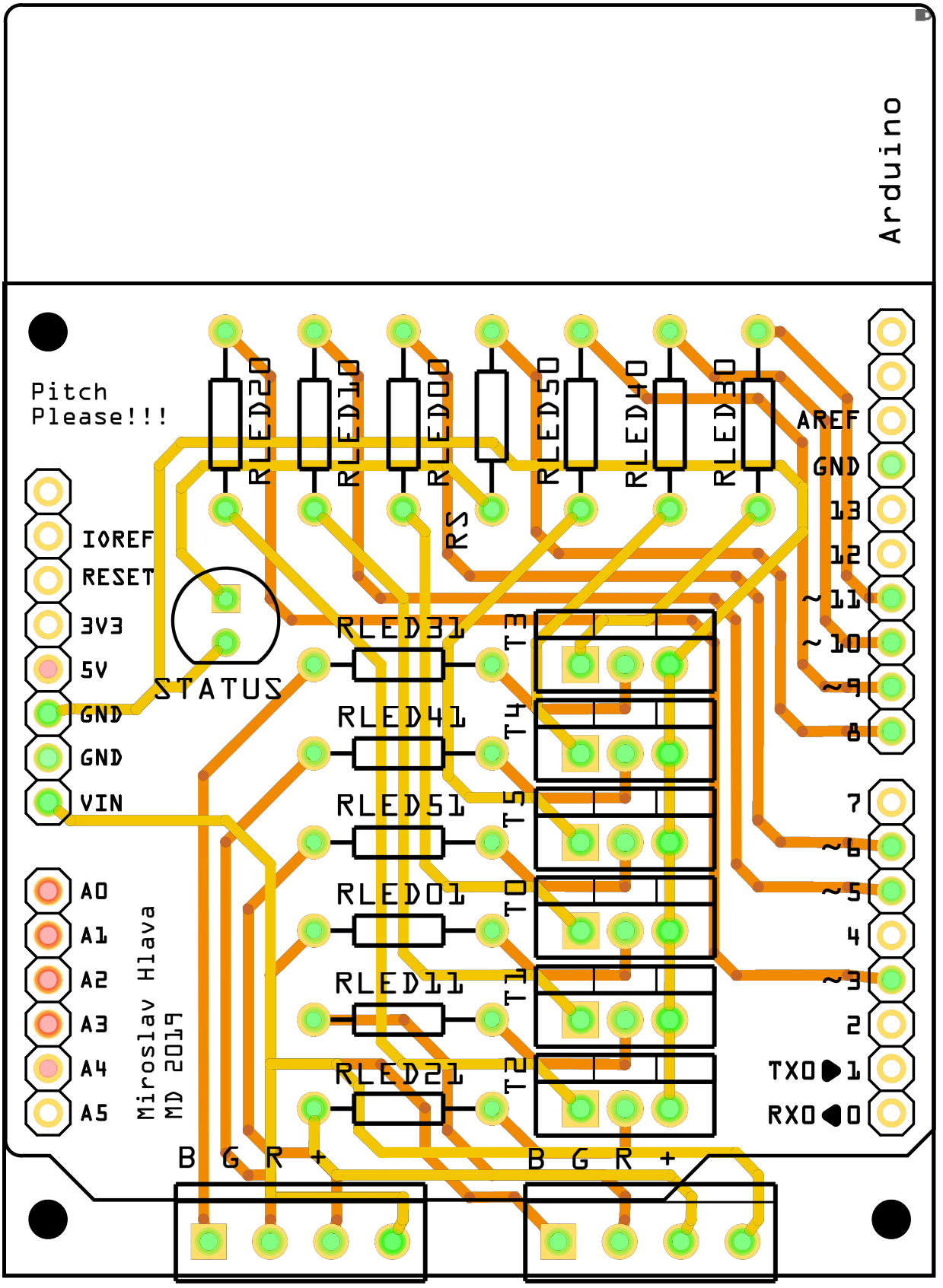
Arduino
Pitch
Please!!!
RLED20
RLED10
RLED00
RS
RLED50
RLED40
RLED30
AREF
GND
13
12
~11
~10
~9
8
7
~6
~5
4
~3
2
TX0 1
RX0 0
IOREF
RESET
3V3
5V
GND
GND
VIN
STATUS
RLED31
RLED41
RLED51
RLED01
RLED11
RLED21
T3
T4
T5
T0
T1
T2
A0
A1
A2
A3
A4
A5
Miroslav Hlava
MD 2019
B G R +
B G R +

fritzing