SUNRISE TELECOM
PROTOCOL DOCUMENTATION

VERSION 3.01

Software Versions
4.33 (DOS)
1.03.xxx 1.0Ghz Linux
2.02.xxx 1.5Ghz Linux

© Copyright (2001-2006) Sunrise Telecom Broadband, une division de Sunrise Telecom Inc.

Tout droits réservés. Les renseignements figurant ici comprennent des informations confidentielles qui sont la propriété de Sunrise Telecom Broadband, et qui ne peuvent être utilisées ni divulguées sans l'autorisation expresse et écrite de Sunrise Telecom Broadband.

© Copyright (2001-2006) Sunrise Telecom Broadband, a division of Sunrise Telecom Inc.

All rights reserved. The information contained herein is confidential and proprietary to Sunrise Telecom Broadband, and may not be used or disclosed without prior written consent of Sunrise Telecom Broadband.

Document History

Date	Document Version	Firmware Version	Description
?	?	?	Initial Release
27/05/2003	2.33	4.30	?
03/06/2003	2.34	4.33	Start of reorganization of the document.
23/03/2004	3.00	4.33	End of reorganization of the document.
29/07/2005	3.01	4.33 DOS 1.03.xxx 1.0Ghz Linux 2.02.xxx 1.5Ghz Linux	Minor textual changes.

Table of contents

1 Introduction 8
2 Spectrum overview 9
2.1 Fast description of the AT2x00 Family of products 9
2.2 Preliminary data treatment 9
2.3 Data scaling 9
3 Communication overview 11
3.1 RS232 transport layer 11
3.2 TCP/IP transport layer 11
3.3 The protocol 12
3.4 Difference between Connected and Logged on 12
3.5 Closing the connection 13
4 BNF (Backus-Naur Form) 14
5 Packet overview 14
5.1 Packet structure 14
5.1.1 Old Encoding Scheme 14
5.1.2 New Encoding Scheme 15
5.1.3 Start Header 15
5.1.4 Source Address 15
5.1.4.1 Old Scheme Value 15
5.1.4.2 New Scheme Value 15
5.1.5 Destination Address 15
5.1.6 Message Type 16
5.1.7 Sub-Command 16
5.1.8 Node Number 16
5.1.9 Packet Sequence 16
5.1.10 Length of message field 17
5.1.11 Message 17
5.1.12 CRC16 (CCITT) 17
5.1.13 End Header 17
5.2 Packet Examples 17
6 Commands 18
6.1 Command template 18
6.2 Values between the different models 19
6.2.1 Frequencies 19
6.2.2 Span 19
6.2.3 Sweep Times 20
6.2.4 Horizontal Times 20
6.2.5 Video Bandwidth 20
6.2.6 Resolution Bandwidth 20
6.2.7 Average Type 20
6.2.8 Trigger Types 20
6.3 Common Commands 22
6.3.1 Common Commands quick table index 22
6.3.2 ACK 23

6.3.3 NACK 24
6.3.4 Logon 25
6.3.5 Logoff 26
6.3.6 System Error 27
6.3.7 General Error 28
6.3.8 Switch Error 29
6.3.9 New Mode 30
6.3.10 Software update 31
6.3.11 Battery Low 32
6.3.12 Shutoff 33
6.3.13 Get System Parameters 34
6.3.14 General Commands 35
6.3.14.1 General Commands quick table index 35
6.3.14.2 Get Settings 36
6.3.14.3 Set Settings 36
6.3.14.4 Get Firmware Version 37
6.3.14.5 Get Date Time 39
6.3.14.6 Set Date Time 40
6.3.14.7 Get Hardware Configuration 41
6.3.14.8 Get Temperature 43
6.3.14.9 Init File Transfer 44
6.3.14.10 File Transfer Block 45
6.3.14.11 Close File Reception 46
6.3.14.12 Get Server Info 47
6.3.14.13 Synchronize Data 48
6.3.14.14 Text Message Command 49
6.3.14.15 Soft Reboot 50
6.3.14.16 Get Connection Info 51
6.3.14.17 Get Current Alarm Threshold 52
6.3.14.18 Get File CRC32 53
6.3.14.19 Reload Channel Plan 54
6.3.14.20 Get List Of HM 55
6.3.14.21 Get Node Names 56
6.3.14.22 Rename File 58
6.3.14.23 Delete Files 59
6.3.14.24 Transaction Request 60
6.3.14.25 SNMP Config 61
6.3.15 Logamp Trace 62
6.3.16 XML Command 63
6.3.16.1 General Commands quick table index 64
6.3.16.2 GetSettings 65
6.3.16.3 SetSettings 67
6.3.16.4 Set Compensation 68
6.3.16.5 Get Compensation 69
6.3.16.6 Sync Firmware 70
6.3.17 Remote IP Commit 71
6.3.18 Switch commands 72
6.3.18.1 Switch Commands quick table index 72

6.3.18.2 Select RPTP Number 73
6.3.18.3 Ask For Current RPTP Number 74
6.3.18.4 Ask for Number of RPTP 75
6.3.18.5 Set Wink Switch 76
6.3.18.6 Clear RPTP 77
6.3.18.7 Select One RPTP 78
6.3.18.8 Toggle an RPTP 79
6.3.18.9 Add an RPTP to current selection 80
6.3.18.10 Ask for the list of selected RPTP 81
6.3.18.11 Ask for the list of available RPTP 82
6.3.18.12 Allow Sequence Mode 83
6.3.18.13 Update SUNRISE Switch firmware 84
6.4 Remote 86
6.4.1 Common Commands quick table index 86
6.4.2 Get Settings 87
6.4.3 Set Settings 88
6.4.4 Acquisition trace 100
6.4.5 Polling 101
6.4.6 Trigger 102
6.4.7 Spectrum Analyzer 103
6.4.7.1 Control Spectrum 103
6.4.8 DCP 104
6.4.8.1 Do Measures 104
6.4.9 Auto Test 105
6.4.9.1 Auto Test Measures 105
6.4.10 TDMA 106
6.4.10.1 Do Trigger 106
6.4.11 QAM 107
6.4.11.1 QAM Messages common data bloc 107
6.4.11.1.1 Constellation 108
6.4.11.1.2 Statistic 109
6.4.11.1.3 Equalizer 110
6.4.11.1.4 Diagnostic 111
6.4.11.2 Start Diagnostic 113
6.4.11.3 Set Equalizer Settings 114
6.4.11.4 Get Equalizer Settings 115
6.4.11.5 Set Normalization File 116
6.4.11.6 Get Normalization File 117
6.4.12 CATV 118
6.4.12.1 BAR 118
6.4.13 Depth of modulation 119
6.4.13.1 Get Current Modulation (DOM) 119
6.4.14 Carrier to noise 120
6.4.14.1 Do Measures (Noise interface) 120
6.4.15 MOS Score Commands 122
6.4.15.1 MOS Score Commands quick table index 122
6.4.15.2 Request MOS Port 123
6.4.15.3 Start Stream 124

6.4.15.4 Stop Stream Request 125
6.4.15.5 MOS Data Request 126
6.4.15.6 Count Request 127
6.5 Monitoring 128
6.5.1 Common Commands quick table index 128
6.5.2 Normal Monitoring flow 129
6.5.3 Start Monitoring 130
6.5.4 Start Monitoring (future) 131
6.5.5 Stop Monitoring 132
6.5.6 Pause Monitoring 133
6.5.7 Ping 134
6.5.8 Download Database 135
6.5.9 Upload Database 136
6.5.10 Poll Status 137
6.5.11 Delete Alarms 138
6.5.12 Delete Statistics 139
6.5.13 Delete Integrals 140
6.5.14 Next Alarm 141
6.5.15 Next Statistic 142
6.5.16 Next Integral 143
6.5.17 Reset Error 144
6.5.18 Get Serial 145
6.5.19 Get Serial (new format in Monitoring 1.08) 146
6.5.20 Select Requested 147
6.5.21 Send Requested 148
6.5.22 Set Working Mode 149
6.5.23 Get Source Sequence 150
6.5.24 Get Source Settings 151
6.5.25 Set Throttling Values 153
6.5.26 Get Alarm Threshold 154
6.5.27 Next Alarm32 155
6.5.28 Error Monitoring 156
6.5.29 Alarm Monitoring Without Image 157
6.5.30 Alarm Monitoring With Image 158
6.5.31 Statistic 159
6.5.32 Integral 160
6.5.33 Status 161
6.5.34 Alarm Monitoring Without Image (new format) 162
6.5.35 Alarm Monitoring With Image (new format) 163
6.5.36 Statistic (new format) 164
6.5.37 Alarm Monitoring With Image (Multimode 32bit format) 165
6.6 HEC 167
6.6.1 How to interact with the HEC 167
6.6.2 Receiving messages from the HEC 167
6.6.3 HEC Commands quick table index 168
6.6.3.1 ACK 169
6.6.3.2 NACK 169
6.6.3.3 Logon 169

6.6.3.4 Logoff 169
6.6.3.5 Switch Error 169
6.6.3.6 Battery Low 169
6.6.3.7 Shut Off 169
6.6.3.8 Remote 169
6.6.3.9 Get Settings 169
6.6.3.10 Polling 169
6.6.3.11 Trigger 169
6.6.3.12 Get Server Info 169
6.6.3.13 Sync 170
6.6.3.14 Text Message Command 170
6.6.3.15 Get List Of HM 170
6.6.3.16 Get Node Names 170
6.6.3.17 Ask For Current RPTP Number 170
6.6.3.18 Ask For Number of RPTP 170
6.6.3.19 Select One RPTP 170
6.6.3.20 Ask For the list of available RPTP 170
6.6.3.21 Select Requested 170
6.6.3.22 Send Requested 170
6.6.3.23 Get Source Sequence 170
6.6.3.24 Set Throttling Values 170
6.6.3.25 TCP/IP Test Packet 171
Glossary 172
Appendix A (File Transfer overview) 173
Appendix B (Alignment algorithm) 176
Appendix C (Mode Numbers) 177
Appendix D (Command Index) 178
Appendix E (Remote Network settings) (at2500 only) 181
Appendix F (QIA Timings) 182
Appendix G (Available files) 183
G.1 file.type.xml 184
G.2 features.xml 185
G.3 ifcfg-eth0.xml 186
G.4 Directory Listing 187

1 Introduction

This document presents the Sunrise Telecom communication protocol. It is intended to people who would like to build custom applications interfacing the AT2x00® Spectrum Analyzer family of products acting as a hardware server. You must be aware that depending on the protocol version of your current spectrum analyzer firmware, some of the commands might not be available. If a command you wish to perform is not supported by the protocol contained in your firmware version, an update is always accessible on Sunrise Telecom Broadband site.

People must be aware that some of the commands described in this document can be armful to the integrity of your spectrum analyzer. Caution is strongly advised and its use is at your own risks. Such commands should be due noted in this document. Certain section title will have their backgrounds colored. Here is the signification of these colors.

Preliminary functions
Deprecated functions
Untested functions
Obsolete functions
Temporary

2 Spectrum overview

2.1 Fast description of the AT2x00 Family of products

The AT2x00 is a family of spectrum analyzer, i.e. a wide band receiver who can cover frequencies from 5 to 1000 MHz (1500 MHz for the AT2500). The span is variable, either 0 or 0.1 to 1000 MHz (1500 MHz for the AT2500). The span values are in 1, 2, 5, 10 sequences and all other values of span are obtained by interpolation.

The 4 IF filters are selected automatically in function of the span to obtain a maximal speed; these settings can be adjusted manually. So, under an invalid combination, the AT2x00 displays "UNCAL".

The Resolution bandwidth/Video bandwidth/Sweep time and Horizontal time input signal is lowered by the input circuitry to keep it in the range of 0 to -70 dBmV. The signal is then fed through different circuitry: i.e. preamplifier, mixers, filters, logarithmic detector and A/D converter.

2.2 Preliminary data treatment

The raw-data coming from the A/D converter represents the attenuated signal (after the input circuitry). Remember that this signal is always in the range of 0 to -70 dBmV. The data is then pre-treated in 3 steps:

1) Correction in the linearity of reception stage.
2) Logarithmic correction to keep the linearity of logarithmic detector.
3) Front-end and an attenuation circuitry correction according to frequency.

2.3 Data scaling

The scale should cover the range of 0 to -70 dBmV, plus the attenuation value, plus the OFFSET value (attenuation or external amplification). With an OFFSET of 0, the scale is then of 0/-70, +5/-65, +65/-5 dBmV depending of the attenuation value (0 to 65 dB).

NOTE: The value of the OFFSET is added to the value of the REF LEV without any modifications to the mechanism of the attenuation circuitry and IF gain. Then the value of the REF LEV in dBmV (including attenuation, OFFSET, etc.) correspond to the top of the screen:

- The data value of 1023 equal to a 0 dBmV REF LEV,
- The data value of 512 equal to a –37.5 dBmV REF LEV,
- The data value of 0 equal to a -70 dBmV REF LEV,

Each data unit correspond to 70/1024 = 0.06836 dB/step

NOTE: The mechanism that changes the scale (10-5-2 dB/div) is not inside the AT2x00, but in the application PC. In a standard application, the change of scale is made from 2 divisions below the reference point (top screen).

REF LEV of 2000HM = 0 dBmV	Scale 10 dB/div	Scale 5 dB/div	Scale 2 dB/div
REF LEVEL ***displayed***	**0 dBmV**	**-10**	**-16**
	-10	-15	-18
Ref. Point to change scale	-20	-20	-20
	-30	-25	-22
	-40	-30	-24
	-50	-35	-25
	-60	-40	-28
	-70	-50	-30

3 Communication overview

The first step into communicating to your spectrum analyzer is to identify what kind of unit you have in hand. You must identify your spectrum Ethernet capability, your software version and communication setup. The identification process is performed in three steps.

Go into your setup menu. The first line tells you the Model of your unit. Two models exist. The 1GHz unit (AT2000), and the 1.5 GHz unit (AT2500).

- The AT2500 is built on a Linux operating system and has full Ethernet capabilities.
- The AT2000 can be built on either Linux or a DOS operating system. The remaining of this section will help you determine which one you have.

  The second line on the screen "SOFTWARE VERSION" gives your software version. This is not the protocol version; it is a mean of interpretation of the communication setups. To the following software versions an optional M*ZZ* can be appended. This indicates a monitoring upgrade. There are four schemes for 1 GHz software version:

  - *XX.YY* This is an old DOS version and probably a firmware upgrade should be in order.
  - *XX.YY* Series D" This is a DOS version. It might be relatively up to date, but you should verify if an upgrade should be in order.
  - *XX.YY* Series L". This is a Linux version. You have full TCP/IP capabilities. The currently selected transport layer (TCP/IP vs. RS232) will be available in the "REMOTE SETUP" menu.
  - *X.YY.ZZZ* This is a Linux version. . You have full TCP/IP capabilities. The currently selected transport layer (TCP/IP vs. RS232) will be available in the "REMOTE SETUP" menu. On an AT2000 a "M" can be appended to indicate monitoring capabilities.

For DOS systems, here is where the interpretation begins. First, verify if you have a RJ45 connector on your spectrum. If not, then RS232 only is available to you and the currently selected communication port will be displayed in the "REMOTE SETUP" menu. If you do have a RJ45 on your spectrum, you have TCP/IP facilities if, in the "REMOTE SETUP" menu, the serial port selected is the one specified by your vendor. A special device converting from RS232 ⇔ TCP/IP acts as the intermediate layer for port handling. This device is directly connected to COM2 (usually) hence why in the "REMOTE SETUP" menu, the serial port COM2 must be selected. You will understand that the communication speed is limited to 115200 bps.

3.1 RS232 transport layer

The RS232 transport layer is of type asynchronous. The port configuration is 8N1 (8 data bits, 1 stop bit, no parity). The communication speed can vary but cannot exceed 115200 bps. Only standard communication speeds are supported. For a full speed list, we strongly suggest to go into the "REMOTE SETUP" menu and list the supported speed. Also, some of the speeds supported in the DOS version of the firmware are not supported in Linux one.

3.2 TCP/IP transport layer

Different services can be accessed depending on the port you are connected to:

- Port 3001 will implement standard functionalities for remote or monitoring control.
- Port 3101 will implement standard functionalities (subset of port 3001) for HEC purpose.

The spectrum acts as a server. It opens a socket and waits upon a client's connection. If you are using a DOS spectrum analyzer supporting TCP/IP, the way to access the spectrum is the same. Only port 3001 is accessible.

3.3 The protocol

The Sunrise Telecom protocol is very simple. The normal command and message flow is described by the following figure. A message is a response to a command. The client only sends most Commands while messages are mostly sent by the AT2x00. However, Some messages are sent from the server to the clients.

For each command transmitted, an ACK or NACK message is send back to the source by the server to respectively indicate a good or bad reception of the command or an unsupported. If the command requires a message, it is sent by the server immediately after the ACK message and deserves no ACK.

The following illustrates a command sent by the client, to the server.

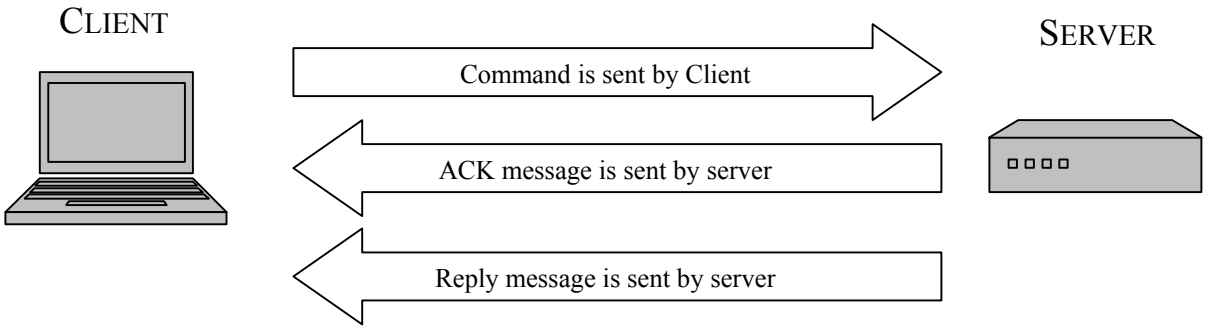

Most commands, like LOGON, only require an ACK message. Others, such as GET_MODE_SETTINGS, will send a reply message containing the information.

The last exception to the normal command and message flow is for status messages. These messages can be sent anytime by the server to indicate a critical error or urgent situation. For example, a LOWBAT message can be sent to the client to indicate that the server battery is low.

3.4 Difference between Connected and Logged on

A server stores two independent states about a client:

- Whether the client is connected or disconnected
- Whether the client is logged on to an AT2x00 or not.

In the first case, the client only needs to open a TCP/IP socket to be connected, and will remain connected until the socket is closed or disconnected.

In the second case, a client is logged on to a server between a successful LOGON and a successful LOGOFF.

A client is only allowed to send messages to the server if it is logged on. A client can only be logged on to a server at a time

3.5 Closing the connection

To close the connection, you can simply close the TCP/IP port. However, it is recommended that you follow a few steps:

- To stop traces flows you have to send a new TRIGGER command with a non-zero parameter (see TRIGGER command description).

- Send a LOGOFF command. After you receive an ACK message on that LOGOFF, you are free to disconnect or even reconnect to the same or a different HM connected to the HEC.

4 BNF (Backus-Naur Form)

In order to help you comprehend the packet description of some commands which are variable as much in size that in content(like the XML packet), the Backus-Naur Form (BNF) has been used in this documentation to describe the syntax. There are many good description of this syntax over the internet. I give a short description of how to read it.

The main things you need to know about the BNF syntax are:

- It takes the form of rules. RULE_NAME → RULE_CONTENT
- ‘”’ enclose string literals
- ‘|’ indicates a choice
- ‘[‘ ‘]’ indicates an optional item
- ‘{‘ ‘}’ indicates 0 or more items
- ‘+’ indicates 1 or more items
- ‘*’ indicates 0 or more items
- ‘x’ .. ‘y’ indicates x to y items

5 Packet overview

The spectrum analyzer as for remote access is a hardware server. It receives requests to perform certain tasks, executes them and transfers results to the sender. Commands can be as various as “send me your current settings”, “use such settings”, “change mode”, “send me your current trace”, etc. These tasks, requests or commands are sent to the spectrum in the form of packet requests. These requests are structured. If a packet doesn’t follow strictly the protocol, it is discarded without any indication to the remote user.

5.1 Packet structure

With the arrival of the AT1800, There was a need to increase the length of the “Message” section. This was needed because each points resolution passed from 10 to 14 bits. A rearrangement of the ASCII section was made to accommodate this, making unused fields available for our needs. The length of the ASCII section remains the same.

The encoding scheme is determined on a packet to packet basis. The response MUST follow the request way of encoding.

The old ASCII packet structure remains available even to the AT1800. The way to differentiate the old packet structure reside in the content of the Source and Destination addresses. If BOTH addresses are in the range of A0 to FF, the new scheme ASCII scheme of packet encoding is used. Otherwise, the old scheme is used.

5.1.1 Old Encoding Scheme

Each packet command is structured the same way. Some of the fields are coded in ASCII digits to help the individuals decode its basic information.

Header Start		Source Address		Destination Address		Message type		Node Number			Packet Sequence	Length of Message field			Message	CRC16 CCITT		Header End	
HD0 MSB	HD1 LSB	AS0 MSB	AS1 LSB	AD0 MSB	AD1 LSB	T0 MSB	T1 LSB	N0 MSB	N1	N2 LSB	SEQ	L0 MSB	L1	L2 LSB	MESSAGE	C0 MSB	C1 LSB	HF0 MSB	HF1 LSB
BYTES used to calculate the checksum																			

5.1.2 New Encoding Scheme

Each packet command is structured the same way. Some of the fields are coded in ASCII digits to help the individuals decode its basic information.

Header Start		Source Address		Destination Address		Message type		Sub-Command		Packet Sequence		Length of Message field			Message	CRC16 CCITT		Header End	
HD0 MSB	HD1 LSB	AS0 MSB	AS1 LSB	AD0 MSB	AD1 LSB	T0 MSB	T1 LSB	N0 MSB	N1 LSB	SEQ1	SEQ2	L0 MSB	L1	L2 LSB	MESSAGE	C0 MSB	C1 LSB	HF0 MSB	HF1 LSB
BYTES used to calculate the checksum																			

If the AT is sending a packet by itself, it will probably encode it in the old fashion. This new fashion is used only in response to a long packet. In fact, a response is always encoded in the same way as the request.

5.1.3 Start Header

Each packet beginning starts with a two bytes binary header consisting of "SOH" and "STX". I.e.:

- HD0 = SOH (0x01) (ASCII)
- HD1 = STX (0x02) (ASCII)

5.1.4 Source Address

Each packet contains a logical source address. If the packet is circulating from the client to the AT2x00, the source address must be one that the client assigned itself. Otherwise, this field will contain the address assigned to the AT2x00 as displayed in the "REMOTE SETUP" menu.

A convention exists stipulating that AT2x00HM unit addresses vary from zero (0) to nine (9) inclusively, and that AT2x00R units vary from ten (10) to ninety-eight (98) inclusively. Address 99 (broadcast) is strictly reserved for the RS-232 transport layer, only in the packets coming out of the AT2x00. It is practically never used.

5.1.4.1 Old Scheme Value

These addresses must be passed throughout the session and must not change. The address consists of a number from zero (0) trough ninety-eight (98) coded in a two ASCII digit values.

5.1.4.2 New Scheme Value

Addresses in the new scheme are not really validated other than to determine old from new encoding scheme. They must remain hexadecimal ASCII though. The address consists of a number from zero (A0) trough ninety-eight (FF) coded in a two ASCII digit values.

5.1.5 Destination Address

Each packet contains a logical destination address. If the packet is circulating from the client to the AT2x00 the destination address must be the address assigned to the AT2x00 as displayed in the "REMOTE SETUP" menu. Otherwise, the AT2x00 will fill this field by the value of the source address of sender of the command. For packets going to the AT2x00, if the destination address and the AT2x00 system ID do not match, the packet is marked as not intended for the AT2x00 and discarded without any notice to the remote program.

This address must be passed throughout the session and must not change. The same convention described in the preceding section applies to the destination address.

5.1.6 Message Type

This field describes the message type. (Limits 1.. 99). (ASCII)
Example:

TYPE=0 [RESERVE]	MESSAGE FIELD'S LENGTH=VARIABLE (ASCII)	
TYPE=1 [ACK]	MESSAGE FIELD'S LENGTH=1	MESSAGE = HEX
TYPE=2 [NACK]	MESSAGE FIELD'S LENGTH=1	MESSAGE = HEX
TYPE=3 [LOGON]	MESSAGE FIELD'S LENGTH=1	MESSAGE = HEX
TYPE=4 [LOGOFF]	MESSAGE FIELD'S LENGTH=0	
TYPE=5 [IMAGE_SPEC]	MESSAGE FIELD'S LENGTH=626	MESSAGE = HEX
TYPE=6 [CTRL_SPECTRUM]	MESSAGE FIELD'S LENGTH=86	MESSAGE = HEX
TYPE=7 [QAM]	MESSAGE FIELD'S LENGTH=VARIABLE (HEX)	
TYPE=8 [DCP]	MESSAGE FIELD'S LENGTH=12	MESSAGE = HEX
TYPE=9 [TDMA]	MESSAGE FIELD'S LENGTH=VARIABLE (HEX)	
TYPE=10 [SM1, SM2, SM6]	MESSAGE FIELD'S LENGTH=VARIABLE (HEX)	
TYPE=11 [AUTO_TEST]	MESSAGE FIELD'S LENGTH=VARIABLE (HEX)	
TYPE=13 [NOISE INTERFACE]	MESSAGE FIELD'S LENGTH=VARIABLE (HEX)	
TYPE=20 [GENERAL_COMMAND]	MESSAGE FIELD'S LENGTH=VARIABLE (HEX)	
TYPE=25 [LOGAMP TRACE]	MESSAGE FIELD'S LENGTH=VARIABLE (HEX)	
TYPE=50 [XML]	MESSAGE FIELD'S LENGTH=VARIABLE (HEX)	
TYPE=79 [REMOTE_IP_COMMIT]	MESSAGE FIELD'S LENGTH=VARIABLE (HEX)	
TYPE=80 [SWITCH_NETWORK]	MESSAGE FIELD'S LENGTH=VARIABLE (HEX)	
TYPE=89 [POLLING]	MESSAGE FIELD'S LENGTH=20	MESSAGE = HEX
TYPE=90 [MONITORING]	MESSAGE FIELD'S LENGTH=VARIABLE (HEX)	
TYPE=91 [SYSTEM ERROR]	MESSAGE FIELD'S LENGTH=1	MESSAGE = HEX
TYPE=92 [DISK ERROR]	MESSAGE FIELD'S LENGTH=1	MESSAGE = HEX
TYPE=93 [SWITCH_ERROR]	MESSAGE FIELD'S LENGTH=1	MESSAGE = HEX
TYPE=94 [NEW_MODE]	MESSAGE FIELD'S LENGTH=1	MESSAGE = HEX
TYPE=95 [UPDATE_SOFTWARE]	MESSAGE FIELD'S LENGTH=0	
TYPE=96 [BATT LOW]	MESSAGE FIELD'S LENGTH=8	MESSAGE = HEX
TYPE=97 [SHUTOFF SERVER]	MESSAGE FIELD'S LENGTH=0	
TYPE=98 [TRIGGER]	MESSAGE FIELD'S LENGTH=2	MESSAGE = HEX
TYPE=99 [GET_PARAM_SYSTEM]	MESSAGE FIELD'S LENGTH=279	MESSAGE = ASCII

5.1.7 Sub-Command

This field is available only with the new scheme. It contains the sub-function for the type.

5.1.8 Node Number

Node number used (ASCII) (1. 999) (not currently used)

5.1.9 Packet Sequence

In the old scheme it is not currently used. It's purpose is explained here.

Packet's sequence (1..5) (Future) *** When message type = 0, SEQ is an ASCII character.

For the new scheme, it serves on the client side to help determine to which command the response belongs. The server simply return an exact copy of the request's packet sequence to the caller.

5.1.10 Length of message field

On the old scheme, this field describes the length of the following field (Limits = 0..999) (ASCII)

On the new scheme, this field describes the length –f the following field (Limits 0 .. FFF) (ASCII) (4 Kb).

5.1.11 Message

This field is the data of the message to transmitted or received. It contains ASCII or HEX values depending of the message type. Normally it contains the request and its parameter or the respond to a request.

For some packets, for instance the XML Packet, the **Backus-Naur form (BNF)** (also known as **Backus normal form**) has been used to describe the data portion of the packet.

5.1.12 CRC16 (CCITT)

A CRC16 (CCITT) is calculated from the Start Header until the end of the message section. Its value is stored in binary value in a big endian way. I.e. Most significant byte first.

5.1.13 End Header

Each packet ends with a two bytes binary end header consisting of "ETX" and "EOT". I.e:

- HF0 = ETX (0x03) (ASCII)
- HF1 = EOT (0x04) (ASCII)

5.2 Packet Examples

This is an example of a LOGON Command sent to an HM ID 1 *(Message field: 1 byte HEX)*

Start Header		Source Address		Destination Address		Message Type		Hub Number			Seq.	Length of Message Field			Mes-sage	CRC16 CCITT		End Header	
0x01	0x02	0x31	0x30	0x30	0x31	0x30	0x33	0x30	0x31	0x30	0x30	0x30	0x30	0x31	Future	0xXX	0xXX	0x03	0x04

6 Commands

This portion of the document lists all commands and responds that can be issued to or returned from an AT2x00 unit. Before any request can be sent, a proper connection to the AT2x00 must be established. The AT2x00 will never drop out the connection unless one of the following occurs:

- The AT2x00 kernel detected a break in the TCP/IP or socket connection.
- The remote client has issued a LOGOFF request.
- A LOGON request has been received after one minute of complete inactivity between the client and the AT2x00.
- A local user has put the AT2x00 into one of the local mode.

It is good to remember that almost all request sent to the AT2x00 will returns an acknowledge. This acknowledge imply that your request has been received and is or will be processed shortly. Further results may be returned when completed depending on the request. Certain timeouts to each request must be respected. These timeouts vary by the complexity of the request. A list of timeouts is available at the end of the document.

6.1 Command template

We describe in this section the command structure applied to all requests. Some of the fields are not described in each command since the information or description is the same for all requests. A description of these packet fields is listed in the "Packet Overview" section. They are Source Address, Destination Address, Sequence Number and Node Number. Other fields vary from one request to the other, the description to all are listed under each request in this document.

First, a brief description indicates the direction of the request/command/state. It takes one of the following forms

- This command can be transmitted both way *(CLIENT ←→ SERVER)*.
- This command can be transmitted from the CLIENT to the SERVER.
- This command can be transmitted from the SERVER to the CLIENT.

Usually the server is the AT2x00 and the client is a PC implementation (Sunrise product or a custom application). In some cases, some application acts as a middle-ware. It acts as a client to the AT2x00 and a server as server to some other application. This is the case of Sunrise's HEC (RealView).

Second, a brief description of what the command is intended for is given.

Third, the command format with all fields' possible values is given. It consists of a table indicating the message type, message length (data portion's length) and the data structure and values. A template of this table takes the following form.

Field Name			Value
Message Type			
Message Length			
Message			
Offsets	Size	Description	Possible values

As you will see later on, packets are byte aligned. This means that there are no fillings or dummy space between fields that are not WORD or LONG aligned. This is important for the interpretation of your requests as for the responses the AT2x00 will return. Also we define some basic types that we will use throughout this document. Multi-bytes values follow the Intel architecture (little-endian) we list them here:

Type Name	Size in bits	Attributes	Possible Values
CHAR	8	Signed	-126.. 127
BYTE	8	Unsigned	0 .. 255
BOOL	8	Unsigned	0 = FALSE, 1 = TRUE
UWORD16	16	Unsigned	0 .. 65535
SWORD16	16	Signed	-32768.. 32767
UWORD32	32	Unsigned	0 .. 4294967295
SWORD32	32	Signed	-2147483648 .. 2147483647
UWORD64	64	Unsigned	0 .. 18446744073709551615
SWORD64	64	Signed	-9223372036854775808 .. 9223372036854775807
Float	32		≈ -8.43e-37 .. ≈ 3.37e38
Double	64		≈ -2.225e-308 .. ≈ 1.797e308

Fourth, a small table indicates the possible ACK/NACK that the command can return.

Finally, an optional table describes the format of the response the command can return. It consists as a table like the command format indicating the fields and possible values.

6.2 Values between the different models

Depending on the unit model some values may change due to the unit's capacity.

6.2.1 Frequencies

Possible frequencies for a AT2000 unit ranges from 0.0 to 1000000000.0 Hz

Possible frequencies for a AT2500 unit ranges from 0.0 to 1500000000.0 Hz

Possible frequencies for a AT1800 unit ranges from 0.0 to 1100000000.0 Hz

6.2.2 Span

Possible Spans for a AT2000 unit ranges from 0.0 to 1000000000.0 Hz

Possible Spans for a AT2500 unit ranges from 0.0 to 1500000000.0 Hz

Possible Spans for a AT1800 unit ranges from 0.0 to 1100000000.0 Hz

6.2.3 Sweep Times

Possible sweep times for AT2000 unit are 3, 6, 15, 30, 100, 300, 1000 or 3000 ms

Possible sweep times for AT2500 unit are 2, 4, 10, 20, 50, 100, 200, 500, 1000, 2000 or 5000 ms. For this unit accessible sweep times depend on the selected span.

Possible sweep times for AT1800 unit are 2, 4, 10, 22, 50, 100, 200, 500, 1000, 2000 or 5000 ms. For this unit accessible sweep times depend on the selected span.

6.2.4 Horizontal Times

Possible horizontal times for AT2000 unit are 0.1, 0.2, 0.5, 1.0, 2.0, 5.0, 10.0, 20.0 or 50.0 ms

Possible horizontal times AT2500 units are 0.05, 0.1, 0.2, 0.5, 1.0, 2.0, 5.0, 10.0, 20.0, 50.0, 100.0, 200.0 or 500.0 ms

Possible horizontal times AT1800 units are 0.05, 0.1, 0.2, 0.5, 1.0, 2.0, 5.0, 10.0, 20.0, 50.0, 100.0, 200.0 or 500.0 ms

6.2.5 Video Bandwidth

Possible video bandwidth for AT2000 units are 10000.0, 100000.0 or 1000000.0 Hz

Possible video bandwidth for AT2500 units are 10000.0, 100000.0 or 1000000.0 Hz

Possible video bandwidth for AT1800 units are 10.0, 10000.0, 100000.0 or 1000000.0 Hz

6.2.6 Resolution Bandwidth

Possible resolution bandwidth for AT2000 units are 10000.0, 30000.0, 300000.0 or 1000000.0 Hz

Possible resolution bandwidth for AT2500 units are 10000.0, 30000.0, 300000.0 or 1000000.0 Hz

Possible resolution bandwidth for AT1800 units are 10000.0, 30000.0, 300000.0 or 1000000.0 Hz

6.2.7 Average Type

For both the 1.0 and 1.5 GHz the Average Type values are the same:

- 0 => No Average
- 1 => Average 1
- 2 => Average 2
- 3 => Peak Hold

6.2.8 Trigger Types

For both the 1.0 and 1.5 GHz the Trigger values are the same:

- 0 => Free Running
- 1 => Line Trigger
- 2 => Video Trigger

6.3 Common Commands

6.3.1 Common Commands quick table index

S ➔ Sender, R ➔ Receiver, X ➔ Sender and Receiver

Type	Command	PC	HM	HEC	Page	Message Type	Description
0						RESERVED	
1		X	X	X	23	ACK	Request received successfully
2		X	X	X	24	NACK	Request error
3		S	R	X	25	Logon	Registration of connection
4		S	R	X	26	Logoff	Deregistration of connection
91		R	S	X	27	System Error	System server error
92		R	S	X	28	General Error	System server error
93		R	S	X	29	Switch Error	Multiplexer error
94		S	R		30	New Mode	Change spectrum mode
95		S	R		31	Update Software	Deprecated
96		R	S	X	32	Battery Low	Low voltage battery warning
97		R	S	X	33	Shutoff	Low voltage battery error (power supply too low)
99		S	R		34	Get System Parameters	Preliminary

The complete Command index can be found at Appendix D

6.3.2 ACK

This command can be transmitted both way *(CLIENT ←→ SERVER)*.

It indicates that to the remote end successfully received a valid command.

Field Name			Value
Message Type			1
Message Length			1
Message			
Offsets	Size	Description	Possible values
0	BYTE	Return Code	○ 0 = SUCCESS ○ 1 .. 10 = Position in PIPELINE (Multi-user mode): ○ 1 = MASTER_ID ○ 2 .. 10 + = SLAVE_ID

There is no response to this packet.

6.3.3 NACK

This command can be transmitted both way *(CLIENT ←→ SERVER)*.

This message is transmitted to the source of a command to indicate an error when a command respects the protocol but contains an invalid command. If the command has a CRC error or an error in the packet, no NACK are needed.

Field Name			Value
Message Type			2
Message Length			1
Message			
Offsets	Size	Description	Possible values
0	BYTE	Error code	0 = FULL_PIPE 1 = BUSY_SYST 2 = NO_LOGON 3 = NO_SAME_MODE 4 = NO_MASTER 5 = WAIT_RX_SETTING 6 = ID_ALREADY_LOGON 7 = COMMAND_NOT_VALID 8 = COMMAND_ALREADY_EXECUTED 9 = MODE_ALREADY_EXECUTED 10 = MULTI_USER_SAME_MODE 11 = COPYING_DATA 12 = XFER_PAQUET_ERROR 13 = XFER_DO_CANCEL 14 = NACK_TRANSFERING_FILE 15= NACK_INVALID_FILE_NAME 16 = NACK_ERROR_PROCESSING_CMD 17 = NACK_MONITORING_RUNNING 18 = NACK_COMMAND_REFUSED_BY_SERVER 19 = XML_ERROR 99 = FUTURE_OPTION 255 = NACK_SERVER_ERROR

There is no response to this packet.

6.3.4 Logon

This command can be transmitted from the CLIENT to the SERVER.

Its purpose is to register the client to the AT2x00 identifying the client number that we have chosen.

Field Name			Value
Message Type			3
Message Length			1
Message			
Offsets	Size	Description	Possible values
0	BYTE	Future	0

Possible ACK/NACK returned:

ACK / NACK	CODES
ACK	1 .. 10
NACK	0, 1, 6, 255

6.3.5 Logoff

This command can be transmitted from the CLIENT to the SERVER.

Its purpose is to deregister the client to the AT2x00.

Field Name			Value
Message Type			4
Message Length			0
Message			
Offsets	Size	Description	Possible values

Possible ACK/NACK returned:

ACK / NACK	CODES
ACK	0
NACK	2

***** In multi-user mode, when the MASTER logs off, the following client become MASTER and must be advised of this priority change. So, the SERVER (AT2000HM) transmits this client an ACK command with code # 1 (MASTER ID). This is only available with serial communication**.

6.3.6 System Error

This command can be transmitted from the SERVER to the CLIENT.

This message indicates a general error at Server's level (AT2x00).

Field Name			Value
Message Type			91
Message Length			1
Message			
Offsets	Size	Description	Possible values
0	BYTE	Future	0

There is no response to this packet.

6.3.7 General Error

This command can be transmitted from the SERVER to the CLIENT.

This message indicates a general error at Server's level (AT2x00).

Field Name			Value
Message Type			92
Message Length			Variable
Message			
Offsets	Size	Description	Possible values
0 – 1	UWORD16	Error code	0 Disk Usage
2 – 5	UWORD32	Supplementary data	○ Percentage in the case of Disk Usage
6 - x	CHAR [N]	Textual Message	NULL Terminated

There is no response to this packet.

6.3.8 Switch Error

This command can be transmitted from the SERVER to the CLIENT.

This message indicates an error at switch node level.

Field Name			Value
Message Type			93
Message Length			1
Message			
Offsets	Size	Description	Possible values
0	BYTE	Future	0

There is no response to this packet.

6.3.9 New Mode

This command can be transmitted from the CLIENT to the SERVER.

This message instructs the AT2x00 to change the actual working mode.

Field Name			Value
Message Type			94
Message Length			1
Message			
Offsets	Size	Description	Possible values
0	BYTE	Desired Mode	See Appendix C

Possible ACK/NACK returned:

ACK / NACK	CODES
ACK	0
NACK	99

6.3.10 Software update

This command can be transmitted from the CLIENT to the SERVER.

This command must be transmit by the HOST only to update the SERVER software.

It was used to connect to COMM.exe but it is no longer used since the AT2x00 file transfer protocol was implemented.

It can still be used on DOS AT2000 and 1.0 GHZ Linux AT2000, but is not recommended.

Field Name			Value
Message Type			95
Message Length			0
Message			
Offsets	Size	Description	Possible values

Possible ACK returned in monitoring only:

ACK / NACK	CODES
ACK	0

DEPRECATED

6.3.11 Battery Low

This command can be transmitted from the SERVER to the CLIENT.

This warning message indicates a low battery level or a problem in the SERVER's power supply.

Field Name			Value
Message Type			96
Message Length			8
Message			
Offsets	Size	Description	Possible values
0 – 7	DOUBLE	Battery level in 8 bit floating point	

There is no response to this packet.

6.3.12 Shutoff

This command can be transmitted from the SERVER to the CLIENT.

This warning message indicates that the Server's power supply is too low.

After reception of this message, the SERVER is turned off.

Field Name			Value
Message Type			97
Message Length			0
Message			
Offsets	Size	Description	Possible values

There is no response to this packet.

6.3.13 Get System Parameters

This command can be transmitted from the CLIENT to the SERVER.

This command requests the basics parameters of the AT2x00.

Field Name			Value
Message Type			99
Message Length			279
Message			
Offsets	Size	Description	Possible values
0 – 30	CHAR	User name	
31 - 60	CHAR	Company name	
61 – 72	CHAR	Software version	
73 – 85	CHAR	Calibration date	Ex: Feb 26, 1998
86 – 106	CHAR	Calibration site	
107 – 117	CHAR	Serial number of system	
118 – 128	CHAR	Serial number of power supply (M25)	
129 –139	CHAR	Serial number of attenuator (M17)	
141 – 150	CHAR	Serial number of LO1 (M15)	
151 – 161	CHAR	Serial number of DDS (M13)	
162 – 172	CHAR	Serial number of LOGAMP (M26)	
173 - 184	CHAR	Serial number of DIGITAL card (M20)	
184 - 194	CHAR	Serial number of FRONTEND (M14)	
195 – 238	CHAR [44]	Future	
239	BYTE	interne	
240	BYTE	interne	
241	BOOL	Invalid Key Beep Switch	FALSE = OFF, TRUE = ON
242	BOOL	Power Off Beep Switch	FALSE = OFF, TRUE = ON
243	BOOL	Help File Switch	FALSE=Custom, TRUE=Standard
244 – 245	UWORD16	Printer Type	0 = EPSON, 1 = HP LASER
246 – 247	UWORD16	Date Format	0 = US, 1 = INTERNATIONAL
248 – 249	UWORD16	LCD Power Down Delay	1..999 Minute(s)
250 – 251	UWORD16	AT2000 Power Off Delay	1.. 999 Minute(s) (999 No Shutoff) (AT2000R only)
252 – 253	UWORD16	Reserve	X
254 – 255	UWORD16	Reserve	X
256 – 263	DOUBLE	Reserve	X
Section version: 4.22			
264 265	UWORD16	Time Out NTSC Out	1..999 Minute(s) (999 No Shutoff if ON/OFF = ON)
266 – 275	UWORD16 [5]	Future	
276.. 278	BYTE [3]	Future	

Possible ACK returned in monitoring only:

ACK / NACK	CODES
ACK	0

Preliminary

6.3.14 General Commands

6.3.14.1 General Commands quick table index

S ➔ Sender, R ➔ Receiver, X ➔ Sender and Receiver

Type		PC	HM	HEC	Page		Description
20	GENERAL_COMMAND						
	1	S	R		36	Get Settings	Requests the settings
	2	S	R		36	Set Settings	Sets the settings
	4	S	R		37	Get Firmware Version	Requests the firmware version
	5	S	R		39	Get Date Time	Requests the Date and Time
	6	S	R		40	Set Date Time	Sets the Date and Time
	7	S	R		41	Get Hardware Configuration	Requests the Hardware configuration
	8	S	R		43	Get Temperature	Requests the temperature
	9	S	R		44	Init File Transfer	Init a file transfer
	10	X	X		45	File Transfer block	A block of file transfer
	11	X	X		45	Close file Transfer	Message interrupting or completing a file transfer
	12	S	R	X	47	Get Server Info	Retrieves what type of server we are talking to.
	13	R	S	X	48	Synchronize	The server indicates that a synchronization may be required
	14	R		S	49	Text Message	Text message to be displayed by the client
	15	S	R		50	Soft Reboot	Reboot selected component
	16				51	Get Connection_Info	Retrieves string information about the server
	17				52	Get Current Alarm Threshold	Retrieves the threshold information on a given source
	18	S	R	S	53	Get File CRC32	Calculate the CRC32 and file length of the given file and return the result.
	19				54	Reload Channel Plan	Tell to reload the current channel plan.
	20	S		R	55	Get List of HM	Retrieve from the server the AT2x00 handled by the server
	21	S		R	56	Get List of Node Names	Retrieve from the server the MUX nodes names.
	22	S	R		58	Rename File	Rename a file on the Spectrum Analyzer
	23	S	R		59	Delete Files	Delete Files on the Spectrum Analyzer
	25				60	Transaction Request	Request the client to synchronize the specified resource
	26	S	R		61	SNMP Config	Configuration as of where to send SNMP traps.

The complete Command index can be found at Appendix D

6.3.14.2 Get Settings

Although this command is in the General Command group, it is considered to be a remote command because it is mode related. You can view the description n the Remote section below.

6.3.14.3 Set Settings

Although this command is in the General Command group, it is considered to be a remote command because it is mode related. You can view the description n the Remote section below.

6.3.14.4 Get Firmware Version

This command can be transmitted from the CLIENT to the SERVER.

This command is used to retrieve from the server the firmware versions of the AT2x00.

Field Name			Value
Message Type			20
Message Length			4
Message			
Offsets	Size	Description	Possible values
0,1	UWORD16	Length of message header	
2	BYTE	Sub-Command	4
3	BYTE	Reserved	

Possible ACK/NACK returned:

ACK / NACK	CODES
ACK	0

An additional packet is transmitted to the client containing the MESSAGE RESPONSE.

Field Name			Value
Message Type			20
Message Length			100
Message			
Offsets	Size	Description	Possible values
0,1	UWORD16	Length of message header	
2	BYTE	Sub-Command	4
3	BYTE	Reserved	
4-19	CHAR [16]	HM firmware string Version.	
20 - 21	UWORD16	Spectrum Analyzer Version	
22 - 23	UWORD16	System Sweep Version	
24 – 25	UWORD16	Bi-directional Version	
26 – 27	UWORD16	Digital Channel Power Version	
28 – 29	UWORD16	Frequency Counter Version	
30 – 31	UWORD16	TV Channel Version	
32 – 33	UWORD16	Multi Carrier Version	
34 – 35	UWORD16	Auto Test Version	
36 – 37	UWORD16	HUM Version	
38 – 39	UWORD16	Distortion Measure Version	
40 – 41	UWORD16	In-Channel Frequency Response Version	
42 – 43	UWORD16	Depth of Modulation Version	
44 – 45	UWORD16	TDMA Version	
46 – 47	UWORD16	QAM Version	

48 – 49	UWORD16	Monitoring Version	
50 – 59	UWORD16 [5]	Reserved	
60 – 61	UWORD16	Setup Version	
62 – 63	UWORD16	Communication protocole Version	
64 – 65	UWORD16	Parameter file Version	
66 – 67	UWORD16	Switch Driver Version	
68 – 69	UWORD16	QAM Diagnostic Option Version	
70 – 93	UWORD16 [12]	Reserved	
94	BYTE	OS Type	○ 1 = DOS ○ 2 = Linux ○ 3 = linux_mips
95	BYTE	Reserved	
96 – 99	UWORD32	Minimum WinMonitor Version to run	

All binary versions number are expressed in 1/100th factors (ex: 102 would mean 1.02)

6.3.14.5 Get Date Time

This command can be transmitted from the CLIENT to the SERVER.

This command is used to retrieve the current Server's date and time.

Field Name			Value
Message Type			20
Message Length			4
Message			
Offsets	Size	Description	Possible values
0,1	UWORD16	Length of message header	
2	BYTE	Sub-Command	5
3	BYTE	Reserved	

Possible ACK/NACK returned:

ACK / NACK	CODES
ACK	0

An additional packet is transmitted to the client containing the MESSAGE RESPONSE.

Field Name			Value
Message Type			20
Message Length			12
Message			
Offsets	Size	Description	Possible values
0,1	UWORD16	Length of message header	
2	BYTE	Sub-Command	5
3	BYTE	Reserved	
4,5	UWORD16	Year	1980 – 2099
6	BYTE	Month	1 – 12
7	BYTE	Day	1 – 31
8	BYTE	Hour	0 – 23
9	BYTE	Minutes	0 – 59
10	BYTE	Seconds	0 – 59
11	BYTE	Hundreds of seconds	0 – 99

6.3.14.6 Set Date Time

This command can be transmitted from the CLIENT to the SERVER.

This command is used to set the Server's date and time.

Field Name			Value
Message Type			20
Message Length			12
Message			
Offsets	Size	Description	Possible values
0,1	UWORD16	Length of message header	
2	BYTE	Sub-Command	6
3	BYTE	Reserved	
4,5	UWORD16	Year	1980 – 2099
6	BYTE	Month	1 – 12
7	BYTE	Day	1 – 31
8	BYTE	Hour	0 – 23
9	BYTE	Minutes	0 – 59
10	BYTE	Seconds	0 – 59
11	BYTE	Hundreds of seconds	0 – 99

Possible ACK/NACK returned:

ACK / NACK	CODES
ACK	0

6.3.14.7 Get Hardware Configuration

This command can be transmitted from the CLIENT to the SERVER.

This command is used to know the version of hardware parts of HM.

Field Name			Value
Message Type			20
Message Length			4
Message			
Offsets	Size	Description	Possible values
0,1	UWORD16	Length of message header	
2	BYTE	Sub-Command	7
3	BYTE	Reserved	

Possible ACK/NACK returned:

ACK / NACK	CODES
ACK	0

An additional packet is transmitted to the client containing the MESSAGE RESPONSE. System boards information is composed of three fields information as described in the M20 section.

Field Name			Value
Message Type			20
Message Length			736
Message			
Offsets		Size	Description	Possible values
0,1		UWORD16	Length of message header	
2		BYTE	Sub-Command	7
3		BYTE	Reserved	
4-23		BYTE [20]	System type	
24-43		BYTE [20]	System serial number	
44-63		BYTE [20]	System calibration date	
M20	64,65	UWORD16	Type	
	66,67	UWORD16	Serial number	
	68-87	CHAR[20]	Calibration date	
M13	88,111		M13 Information	
M14	112,135		M14 Information	
M15	136,159		M15 Information	
M17	160,183		M17 Information	
M24	184,207		M24 Information	
M25	208,231		M25 Information	
M26	232,255		M26 Information	
M28	256,279		M28 Information	
M29	280,303		M29 Information	
M30	304,327		M30 Information	
Eth0	328,351		Ethernet Information	
SER	352,375		Serial card Information	

QAM	376,399		QAM option Information	Type field ○ Bit 0 – 14: ○ 0 = No module ○ 1 = Telsey ○ 2 = Sunrise ○ Bit 15 = ON if module have an mpeg output. Serial number field ○ 00 – annex B and C support ○ 10 – annex A, B and C support ○ 11 – annex B and C support ○ 12 – annex A support
ARCH	400,423		Archive media Information	
VID	424,447		Video card Information	
BATT	448,471		Battery Information	
CHG	472,495		Charger Information	
496		BYTE	Maximum frequency in 100Mhz steps	10 or 15
497- 500		UWORD32	QAM modulation and standards	Used as a bit field, Bit: • 0 Structure is valid • 1 QAM64 Annex A • 2 QAM 256 Annex A • 3 QAM 64 Annex B • 4 QAM 256 Annex B • 5 QAM 64 Annex C • 6 QAM 256 Annex C • 7 QAM 16 Annex C upstream • 8 – 31 unused.
501-735		BYTE [236]	Reserved	

6.3.14.8 Get Temperature

This command can be transmitted from the CLIENT to the SERVER.

It serves to retrieve from the AT2x00 its current internal and external temperature

Field Name		Value	
Message Type		20	
Message Length		4	
Message			
Offsets	Size	Description	Possible values
0,1	UWORD16	Reserved for future use	
2	BYTE	Sub-Command	8
3	BYTE	Reserved for future use	

Possible ACK/NACK returned:

ACK / NACK	CODES
ACK	0

An additional packet is transmitted to the client containing the MESSAGE RESPONSE.

Field Name		Value	
Message Type		20	
Message Length		8	
Message			
Offsets	Size	Description	Possible values
0,1	UWORD16	Reserved for future use	
2	BYTE	Sub-Command	8
3	BYTE	Reserved for future use	
4,5	SWORD16	Internal temperature from HM	Temperature in ºC
6,7	SWORD16	External temperature from HM	Temperature in ºC

6.3.14.9 Init File Transfer

DANGER

This command can be transmitted from the CLIENT to the SERVER.

This command is used to initialize a file transfer. If the file to be downloaded is terminated by a dollar sign, the file name is considered to be a path and the file content will contains the directory listing of the path in a XML format (This feature is valid only on AT2500 units).

This is the first step of a multi step procedure between the client and the server. For a complete understanding of this procedure we suggest you to look at Appendix A.

Field Name			Value
Message Type			20
Message Length			Variable
Message			
Offsets	Size	Description	Possible values
0,1	UWORD16	Reserved for future use	
2	BYTE	Sub-Command	9
3	BYTE	Reserved for future use	
4	BOOL	Upload transfer?	○ TRUE ○ FALSE
5	BYTE	Suggested protocol version	
6 – 9	UWORD32	Length of file in BYTES	0 for download
10,11	UWORD16	Suggested size of block for transfer (in BYTES)	
12 – 19	BYTE [8]	Future Options	
20	BYTE	Length of file name	
21 – n	CHAR [L]	NULL terminated file name	

Possible ACK/NACK returned:

ACK / NACK	CODES
ACK	0

An additional packet is transmitted to the client containing the MESSAGE RESPONSE.

Field Name			Value
Message Type			20
Message Length			20
Message			
Offsets	Size	Description	Possible values
0,1	UWORD16	Reserved for future use	
2	BYTE	Sub-Command	9
3	BYTE	Reserved for future use	
4	BOOL	Upload transfer?	○ TRUE ○ FALSE
5	BYTE	Protocol version to use	
6 - 9	UWORD32	Length of file in BYTES	
10,11	UWORD16	Size of block to use for transfer (in BYTES)	
12 - 19	BYTE	Future Options	

6.3.14.10 File Transfer Block

DANGER

This command can be transmitted both way *(CLIENT ←→ SERVER)*.

This command is used to transfer a file data block. When a file block is transferred, the receiver responds by acknowledging with the sequence number of the block to signify that the block was successfully processed or with a NACK indicating the error that occurred.

This is the core of a multi step procedure between the client and the server. For a complete understanding of this procedure we suggest you to look at Appendix A.

Field Name			Value
Message Type			20
Message Length			Variable
Message			
Offsets	Size	Description	Possible values
0,1	UWORD16	Reserved for future use	
2	BYTE	Sub-Command	10
3	BYTE	Reserved for future use	
4	BYTE	Sequence number of block	0-255
5	BYTE	Reserved for future use	
6 - 9	UWORD32	Block position in file	
10,11	UWORD16	Length of this data block	
12 - n	BYTE [blk len]	Data	

Possible ACK/NACK returned:

ACK / NACK	CODES
ACK	Seq
NACK	12, 13

6.3.14.11 Close File Reception

DANGER

This command can be transmitted both way *(CLIENT ←→ SERVER)*.

This command is used to end a file reception. Normally the application that sends the data blocks waits for this command. This way, we are assured of a complete reception.

This is the final step of a multi step procedure between the client and the server. For a complete understanding of this procedure we suggest you to look at Appendix A.

Field Name			Value
Message Type			20
Message Length			20
Message			
Offsets	Size	Description	Possible values
0,1	UWORD16	Reserved for future use	
2	BYTE	Sub-Command	11
3	BYTE	Reserved for future use	
4	BYTE	Protocol version	
5	BYTE	Reserved for future use	
6 – 9	UWORD32	Length of transferred file (in BYTES)	
10,11	UWORD16	Number of transferred block	
12 – 19	BYTE [8]	Future Options	

Possible ACK/NACK returned:

ACK / NACK	CODES
ACK	0

6.3.14.12 Get Server Info

This command can be transmitted from the CLIENT to the SERVER.

This command is used to know if we are talking to a HEC or an AT2x00.

Field Name		Value	
Message Type		20	
Message Length		4	
Message			
Offsets	Size	Description	Possible values
0,1	UWORD16	Length of message header	0
2	BYTE	Sub-Command	12
3	BYTE	Reserved	

Possible ACK/NACK returned:

ACK / NACK	CODES
ACK	0

An additional packet is transmitted to the client containing the MESSAGE RESPONSE.

Field Name		Value	
Message Type		20	
Message Length		104	
Message			
Offsets	Size	Description	Possible values
0,1	UWORD16	Length of message header	0
2	BYTE	Sub-Command	12
3	BYTE	Reserved	
4	CHAR [20]	System type	"HEC" if HEC Starts with "AT2000" for AT2000s
24	CHAR [80]	Version and comments.	

6.3.14.13 Synchronize Data

This command can be transmitted from the SERVER to the CLIENT.

This command informs the CLIENT that it must resynchronize its data.

Field Name			Value
Message Type			20
Message Length			10
Message			
Offsets	Size	Description	Possible values
0,1	UWORD16	Length of the message header	
2	BYTE	Sub-Command	13
3	BYTE	Reserved for future use	
4 – 5	SWORD16	Bit field of values to sync	• 0xFFFF All fields • 0x4000 Dataset
6 – 9	SWORD32	Optional Parameter	

6.3.14.14 Text Message Command

This command can be transmitted from the SERVER to the CLIENT. This command is HEC intended.

This command is sent by the SERVER when the flow of traces is interrupted. It contains a text message to display to the user until traces are received or another message replaces the previous one.

If option value is 2, the HEC is stopping and will not respond to any messages. The TCP/IP is also closing.

Field Name			Value
Message Type			20
Message Length			246
Message			
Offsets	Size	Description	Possible values
0,1	UWORD16	Length of message header	0
2	BYTE	Sub-Command	14
3	BYTE	Reserved	
4	WORD	Option Value	• 0: Normal Message • 2: HEC is stopping
6	CHAR [240]	Text message to display.	

Possible ACK/NACK returned:

ACK / NACK	CODES
ACK	0

6.3.14.15 Soft Reboot

This command can be transmitted from the CLIENT to the SERVER.

This message is issued by the client to request the server to restart the selected resource.

Field Name			Value
Message Type			20
Message Length			6
Message			
Offsets	Size	Description	Possible values
0,1	UWORD16	Length of message header	0
2	BYTE	Sub-Command	15
3	BYTE	Reserved	
4 - 5	UWORD16	Reboot Type	Some of these reboot types may not be available on certain kind of units. • 0x0055 System • 0x00AA Application • 0x0088 Network Reboot • 0xAA88 Shutdown System • 0x55AA Shutdown Application

Possible ACK/NACK returned:

ACK / NACK	CODES
ACK	0

6.3.14.16 Get Connection Info

This command can be transmitted from the CLIENT to the SERVER.

Retrieve from the HEC the information of one of it's client.

Field Name			Value
Message Type			20
Message Length			6
Message			
Offsets	Size	Description	Possible values
0,1	UWORD16	Length of message header	0
2	BYTE	Sub-Command	16
3	BYTE	Reserved	

Possible ACK/NACK returned:

ACK / NACK	CODES
ACK	0

An additional packet is transmitted to the client containing the MESSAGE RESPONSE.

Field Name			Value
Message Type			20
Message Length			104
Message			
Offsets	Size	Description	Possible values
0,1	UWORD16	Length of message header	0
2	BYTE	Sub-Command	16
3	BYTE	Length of HM string	
4 .. 3+n1	CHAR [n1]	Name of HM	
n1+4	BYTE	Length of IP string	
n1+5 .. 4+n1+n2	CHAR [n2]	IP string	
n1+n2+5	BYTE	Length of current mode string	
n1+n2+6 .. n1+n2+n3+5	CHAR [n3]	Current mode string	

6.3.14.17 Get Current Alarm Threshold

This command can be transmitted from the CLIENT to the SERVER.

Retrieve from the HEC the threshold information of the current node for the current client.

Field Name			Value
Message Type			20
Message Length			6
Message			
Offsets	Size	Description	Possible values
0,1	UWORD16	Length of message header	0
2	BYTE	Sub-Command	17
3	BYTE	Reserved	

Possible ACK/NACK returned:

ACK / NACK	CODES
ACK	0

An additional packet is transmitted to the client containing the MESSAGE RESPONSE.

Field Name			Value
Message Type			90
Message Length			646
Message			
Offsets	Size	Description	Possible values
0,1	UWORD16	Length of message header	0
2	BYTE	Sub-Command	17
3	BYTE	0 if successful, 0xFF otherwise	
4,5	UWORD16	Number of the signal source	
6	BYTE	Reserved for future use	
7	BYTE	Number of alarm threshold	
Th. 1 8,9	SWORD16	Threshold of first alarm	
Th. 1 10	BYTE	Compare type	• 0 – not active • 1 – link loss • 2 – overshoot
Th. 2 11,13		Threshold # 2	
Th. 3 14,17		Threshold # 3	
Th. 4 18, 20		Threshold # 4	
Th. 5 21, 23		Threshold # 5	
•	•	•	•
24 – 649	BYTE [625]	Trace image	

6.3.14.18 Get File CRC32

This command can be transmitted from the CLIENT to the SERVER.

Request to perform a CRC32 calculation on a file residing on the server.

Field Name			Value
Message Type			20
Message Length			Variable
Message			
Offsets	Size	Description	Possible values
0,1	UWORD16	Length of message header	0
2	BYTE	Sub-Command	18
3	BYTE	Reserved	
4 .. N	CHAR	File name	Null terminated filename

Possible ACK/NACK returned:

ACK / NACK	CODES
ACK	0

An additional packet is transmitted to the client containing the MESSAGE RESPONSE.

Field Name			Value
Message Type			20
Message Length			12
Message			
Offsets	Size	Description	Possible values
0,1	UWORD16	Length of message header	0
2	BYTE	Sub-Command	18
3	BYTE	Reserved	
4 - 7	UWORD32	CRC32 of the file	
8 - 11	UWORD32	File Length	

6.3.14.19 Reload Channel Plan

This command can be transmitted from the CLIENT to the SERVER.

Request the server to read the default channel plan.

Field Name			Value
Message Type			20
Message Length			4
Message			
Offsets	Size	Description	Possible values
0,1	UWORD16	Length of message header	0
2	BYTE	Sub-Command	19
3	BYTE	Reserved	

Possible ACK/NACK returned:

ACK / NACK	CODES
ACK	0

6.3.14.20 Get List Of HM

This command can be transmitted from the CLIENT to the SERVER. This command is HEC intended.

This message is used to retrieve from the SERVER the list of AT2x00 that the client can retrieve information and traces. Only the first 45 HM are sent.

Unlike other messages, this message can be sent in broadcast (remote id 99) without login on, in which case it will respond in broadcast (source and destination id 99).

Field Name		Value	
Message Type		20	
Message Length		4	
Message			
Offsets	Size	Description	Possible values
0-1	UWORD16	Length of header	
2	BYTE	Sub-Command	20
3	BYTE	Reserved for future use	

Possible ACK/NACK returned:

ACK / NACK	CODES
ACK	0

An additional packet is transmitted to the client containing the MESSAGE RESPONSE.

Field Name		Value	
Message Type		20	
Message Length		Variable	
Message			
Offsets	Size	Description	Possible values
0-1	UWORD16	Length of header	
2	BYTE	Sub-Command	20
3	BYTE	Reserved for future use	
4,5	UWORD16	Number of the HM	
6	BYTE	Connection Number of first HM	
7	BOOL	Available flag of first HM	
8-27	CHAR [20]	Name of the first HM	
•	•	•	•
X + 0	BYTE	Connection Number of last HM	
X+1	BOOL	Available flag of last HM	
X+2	CHAR [20]	Name of the last HM	

6.3.14.21 Get Node Names

This command can be transmitted from the CLIENT to the SERVER. This command is HEC intended.

This message is used to retrieve from the SERVER the name of its switch ports, up to 64 at a time.
It will be supported in the future on the AT2000, but the alphabetical sort will not be supported.

Field Name			Value
Message Type			20
Message Length			7
Message			
Offsets	Size	Description	Possible values
0-1	WORD	Length of header	
2	BYTE	Sub-Command	21
3	BYTE	Reserved for future use	• 0 ➔ For protocols versions before 3.01 • 1 ➔ For protocols versions starting at 3.01
4,5	WORD	Position of the first node to be returned.	
6	BOOL	Alphabetical order **NOTE: Will not be supported on the AT2000**	

Possible ACK/NACK returned:

ACK / NACK	CODES
ACK	0

An additional packet is transmitted to the client containing the MESSAGE RESPONSE.

For protocol version prior to 3.01, only the HEC was replying to this message. The response had the following format.

Field Name			Value
Message Type			20
Message Length			Variable
Message			
Offsets	Size	Description	Possible values
0-1	WORD	Length of header	
2	BYTE	Sub-Command	21
3	BYTE	Reserved for future use	0
4,5	WORD	Position of the first node returned.	
6	BOOL	Alphabetical order	
7,8	UWORD16	Number of nodes returned	
9,10	UWORD16	Node number of the first node returned	
11-22	CHAR [12]	Name of the first node returned	
•	•	•	•
X + 0	UWORD16	Node number of the last node returned	
X+1	CHAR [12]	Name of the last node returned	

For protocol version 3.01 and after, the HEC and the At2x00 answer this message. Here is the format.

Field Name		Value	
Message Type		20	
Message Length		Variable	
Message			
Offsets	Size	Description	Possible values
0-1	WORD	Length of header	
2	BYTE	Sub-Command	21
3	BYTE	Reserved for future use	1
4,5	WORD	Position of the first node returned.	
6	BOOL	Alphabetical order	
7,8	UWORD16	Number of nodes returned	
9,10	UWORD16	Node number of the first node returned	
11- Y	CHAR [y]	NUL terminated node name	
•	•	•	•
X – X+1	UWORD16	Node number of the last node returned	
X+2 .. Z	CHAR [z]	NUL terminated node name	

6.3.14.22 Rename File

DANGER

This command can be transmitted from the CLIENT to the SERVER.

This command is used to rename a file on the AT2000 flash.

Field Name		Value	
Message Type		20	
Message Length		Variable	
Message			
Offsets	Size	Description	Possible values
0,1	UWORD16	Reserved for future use	
2	BYTE	Sub-Command	22
3	BYTE	Reserved for future use	
4 – n	CHAR [x]	Name of the source file to rename. The name is NUL terminated.	
n + 1	CHAR[y]	Name of the destination file to rename. The name is NUL terminated.	

Possible ACK/NACK returned:

ACK / NACK	CODES
ACK	0
NACK	16, 18

6.3.14.23 Delete Files

DANGER

This command can be transmitted from the CLIENT to the SERVER.

This command is used to delete files on the AT2000 flash.

Field Name		Value	
Message Type		20	
Message Length		Variable	
Message			
Offsets	Size	Description	Possible values
0,1	UWORD16	Reserved for future use	
2	BYTE	Sub-Command	23
3	BYTE	Reserved for future use	
4	BYTE	Number of files to delete.	0-255
5– n	CHAR	All file names to delete are NUL terminated. The last entry is double NUL terminated.	

Possible ACK/NACK returned:

ACK / NACK	CODES
ACK	0

6.3.14.24 Transaction Request

This command can be transmitted from the CLIENT to the SERVER.

This command opens delimiter a transaction on the server. Usually a transaction freezes a resources for a until an operation is completed. It is important that a complete cycle (open commit/cancel) be performed so that the resource is not frozen indefinitely.

Field Name			Value
Message Type			20
Message Length			7
Message			
Offsets	Size	Description	Possible values
0,1	UWORD16	Length of message header	0
2	BYTE	Sub-Command	25
3	BYTE	Reserved	
4	BYTE	Transaction Type	• 1 => Open • 2 => Commit • 3 => Cancel
5 – 6	UWORD16	Resource Index	• 0x4000 => Data Logging

Possible ACK/NACK returned:

ACK / NACK	CODES
ACK	0

6.3.14.25 SNMP Config

This command can be transmitted from the CLIENT to the SERVER.

This command is used to configure the SNMP manager client information.

Field Name			Value
Message Type			20
Message Length			209
Message			
Offsets	Size	Description	Possible values
0, 1	WORD	Packet Length	
2	BYTE	Sub-Command	26
3	BYTE	Reserved	
4	BYTE	SNMP Version	1, 2 or 3 (Hard-coded to 1 for now) 0 Remove All SNMP clients
5 - 45	CHAR[41]	User Name (SNMPv3)	
46, 47	SWORD16	Trap port	162
48 - 127	CHAR[80]	Community	
128	BYTE	Nb Clients	0 – 5 (0 Remove all SNMP Clients)
129 – 144	CHAR[16]	IP 1	**(There is no name resolving on the AT2x000)**
145 – 160	CHAR[16]	IP 2	**(There is no name resolving on the AT2x000)**
161 - 176	CHAR[16]	IP 3	**(There is no name resolving on the AT2x000)**
177 – 192	CHAR[16]	IP 4	**(There is no name resolving on the AT2x000)**
193 - 208	CHAR[16]	IP 5	**(There is no name resolving on the AT2x000)**

Possible ACK/NACK returned:

ACK / NACK	CODES
ACK	0

6.3.15 Logamp Trace

This command can be transmitted from the SERVER to the CLIENT.

This command contains information and the trace for one of the logamp type mode.

Field Name				Value
Message Type				25
Message Length				Variable
Message				
Offsets		Size	Description	Possible values
Trace Info	0-1	UWORD16	Header Size	
	2	BYTE	Number of Traces	
	3 – 6	SWORD32	Settings Version	
	7 – 11	BYTE[4]	Reserved	
View Information	12 – 13	SWORD16	Header Size	
	14	BYTE	Trace Index	
	15	BOOL	Log Amplified	
	16	BYTE	UnCal	
	17	BOOL	Saturated	
	18	BYTE	Detector	
	19	BYTE	Average Type	
	20	BYTE	Average Length	
	21	BYTE	Point Size	
	22 – 23	SWORD16	Point Count	
	24 – 27	BYTE[4]	Reserved	
28 …			Trace Data	
…				
View Information	X – X+11			
X+12 - …			Trace Data	

There is no response to this packet.

6.3.16 XML Command

XML Packets have been introduced with the AT1800. If you have a AT2000 or AT2500, these packets may not be supported. The descriptions in the section are noted in the Backus-Naur Form (BNF) which is briefly described prior in this document.

Each XML packets has common rules that are listed here.

```
XML_Request        → XMLHeader XMLCommandList
XMLHeader          → XMLTagStart XMLTagVersion XMLTagEncoding XMLTagStandalone XMLTagEnd
XMLTagStart        → "<?xml"
XMLTagVersion      → "version=" numstring
XMLTagEncoding     → "encoding=\"UTF-8\""
XMLTagStandalone   → "standalone=\"no\""
XMLTagEnd          → "?>"

XMLCommandList     → "<Commands>" { XMLCommand } "</Commands>"

XMLCommand         → XMLCmdTagStart XMLParamsSection XMLActionSection XMLCmdEndTag
XMLCmdTagStart     → "<Cmd " ( CmdId [ CmdName ] | CmdName ) CmdIndex ">"
XMLCmdEndTag       → "</Cmd>"
CmdId              → "Id=" numstring
CmdName            → "name=" NAME
CmdIndex           → "Idx=" numstring

XMLParamsSection   → "<Params>" { Fields } "</Params>"
XMLActionSection   → "<Action>" Actions "</Action>"

Fields             → TagField [ FieldValue ] EndTagField
TagField           → "<" FieldName ">"
FieldValue         → string | numstring
EndTagField        → "</" FieldName ">"
FieldName          → string
Actions            → "<Commit />" | "<Return />"
string             → { letter | number }
numstring          → [ "+" | "-" ] { number }+ [ [ "." ] { number } [ "e" [ "+" | "-" ] { number }+ ] ]
letter             → "A" – "Z" | "a" – "z"
number             → "0" – "9"
```

Please note that:

- The CmdName rule is there only for readability reasons. It is not used in the command execution algorithm.
- The CmdIndex rule is used to determine the order of the execution of multiple commands in a single packet. Indexes start at 1. No discontinuity is allowed.
- Every XML tree in a packet MUST contain a valid XML string. In the case of request that are too long for the protocol packet, it can be easily be split into multiple protocol packets.
- It is the responsibility to the sender that the request AND its response fit a packet.
- In the case of a request with response, the order of the parameters in with the request was send might not be the same as the response. The complete XML string will be returned, event commands that should not contain retrieve information.
- Literal string are case sensitive.
- Any error in the XML string may stop its execution.
- Accepted bool values are true, false, on, off, 1 or 0. If something else is passed it is considered as false.
- The Field values will be decoded in the expected types which are listed in the command descriptions.
- Valid command Ids range from 1 to …

6.3.16.1 General Commands quick table index

S ➔ Sender, R ➔ Receiver, X ➔ Sender and Receiver

Type	Command	PC	HM	HEC	Page	Message Type	Description
50	**XML COMMAND**						
	1	S	R		65	Get Settings	Requests the settings
	2	S	R		67	Set Settings	Initialize the settings
	3	S	R		68	SetCompensation	Enable/disable compensation
	4	S	R		69	GetCompensation	Retrieve the current compensation
	5	S	R		70	Sync Firmware	Perform a firmware upgrade

The complete Command index can be found at Appendix D

6.3.16.2 GetSettings

This command can be transmitted from the CLIENT to the SERVER.

The GetSettings command retrieve in an XML format the current settings of the unit

Field Name	Value	
Message Type	50	
Message Length	Variable	
XML Command	Value	
Name (*NAME*)	GetSettings	
Id (*CmdId's numstring*)	1	
Possible Parameters		
Name (*FieldName*)	Type	Description
CF	LONG	Center Frequency in hertz [3]
Att	LONG	Attenuator [1 3]
Span	LONG	Span In Hz
ZSpanV	LONG	ZeroSpanValue [1]
SwTime	LONG	Sweep Time in msec
HTime	LONG	Horizontal Time in msec
RBW	LONG	Resolution Bandwidth in Hz
VBW	LONG	Video Bandwidth in Hz
FieldNb	LONG	Field Number
LineNb	LONG	Line Number
AvgLen	LONG	Average Length
VidChan	LONG	Video Channel
AudChan	LONG	Audio Channel
AudioVol	LONG	Audio Volume
TrigType	LONG	Trigger Type [1]
QamStd	LONG	Qam Standard [1]
QamModType	LONG	Qam Modulation Type [1]
QamPol	LONG	Qam Polarity [1]
QamNseNrNseCorr	BOOL	Qam Noise Near Noise Correction
QamISymbRate	LONG	Qam Ideal Symbol Rate [3]
QamSESThsld	LONG	Qam SES Threshold
QamIntrLveI	LONG	Qam Interleave I
QamIntrLveJ	LONG	Qam Interleave J
RFInput	LONG	RF Input selection • 0 → Signal • 1 → Terminator • 2 → Calibrator • 3 → Cable Modem
BPFilter	LONG - LONG	High Filter selection The bandpass filter is passed as a range of frequency in Hz separated by a "-" ex: "0-45000000"
SubMode	LONG	Depend on the mode [1]
QamUSGDGAA	LONG	Value to set the USG Amplifier
View.LogAmplified	BOOL	Is the trace data in linear or dBmV [4 5] • True → dBmV • False → Linear
View.Detector	BYTE	Type of detection the trace data was built on [4 5] • 0 → Positive Detector Modes

		• 1 → Negative Detector Modes • 2 → Detector Mode Sample
View.AverageLength	BYTE	Average Length [4 5]
View.AverageType	BYTE	Average Type [4 5]
View.PointCount	BYTE	Number of points in the trace [4 5]

[1] see the binary version of Get/SetSettings for the mode you are using.
[2] Filter selection depend on the unit.
[3] These are used for all modes (also USG)
[4] For the AT1800 and forward only
[5] These settings takes an XML attribute named "index" that indicates the trace number

Possible ACK/NACK returned:

ACK / NACK	CODES
ACK	0

An additional packet is transmitted to the client containing complete packet with its value filled **IF** the return action is present.

6.3.16.3 SetSettings

The SetSettings command initialize the hardware to the specified settings.

Field Name	Value	
Message Type	50	
Message Length	Variable	
XML Command	Value	
Name (*NAME*)	SetSettings	
Id (*CmdId's numstring*)	2	
Possible Fields		
Name	Type	Description
All possible Field available to the GetSettings request are available to SetSettings. Please refer to GetSettings for available Fields.		

Possible ACK/NACK returned:

ACK / NACK	CODES
ACK	0

6.3.16.4 Set Compensation

The Compensation command sets the hardware to enable/disable specified type of compensation.

Field Name	Value	
Message Type	50	
Message Length	Variable	
XML Command	Value	
Name (*NAME*)	Set Compensation	
Id (*CmdId's numstring*)	3	
Possible Fields		
Name	Type	Description
All	BOOL	Sets all compensation or off
LogAmp	BOOL	Logamp Compensation (AT2000 and AT2500 only)
Freq	BOOL	Frequencies Compensation
Att	BOOL	Attenuation Compensation
FilterBand	BOOL	Hardware Filters (AT2000 and AT2500 only)
QAM	BOOL	QAM Compensation
QAMUSGLevel	BOOL	USG Level Compensation
QAMUSGFrequency	BOOL	USG Frequency Compensation
Video	BOOL	Video Compensation (AT2500 only)

Possible ACK/NACK returned:

ACK / NACK	CODES
ACK	0

6.3.16.5 Get Compensation

The Compensation command sets the hardware to enable/disable specified type of compensation.

Field Name	Value	
Message Type	50	
Message Length	Variable	
XML Command	Value	
Name (*NAME*)	Get Compensation	
Id (*CmdId's numstring*)	4	
Possible Fields		
Name	Type	Description
All possible Field available to the Set Compensation request are available except for the "All" tag. Please refer to "SetCompensation" for available Fields.		

Possible ACK/NACK returned:

ACK / NACK	CODES
ACK	0

The complete Command index can be found at Appendix D

6.3.16.6 Sync Firmware

This command can be transmitted from the CLIENT to the SERVER.

The GetSettings command retrieve in an XML format the current settings of the unit

Field Name	Value	
Message Type	50	
Message Length	Variable	
XML Command	Value	
Name (*NAME*)	SyncFirmware	
Id (*CmdId's numstring*)	5	
Possible Parameters		
Name (*FieldName*)	Type	Description
Path	STRING	Path (or URI) to the location where the packages reside. The path can be a local path directory or an address to an external FTP or HTTP server. The path must begin with "file:", "ftp:" of "http:", for example: Use the archive stored locally at /home/jason/debian file:/home/jason/debian Use HTTP to access the archive at archive.debian.org, under the debian-archive directory http://archive.debian.org/debian-archive Use FTP to access the archive at ftp.debian.org, under the debian directory ftp://ftp.debian.org/debian
Polling	BOOL	If True, the linux application will poll the location defined in Path right away and then once at every time interval speficied in Interval. If false, the upgrade is done right away only once.
Interval	LONG	Time interval in minutes between polling actions, used only if Poling is true.

Possible ACK/NACK returned:

ACK / NACK	CODES
ACK	0

6.3.17 Remote IP Commit

This command can be transmitted from the CLIENT to the SERVER.

When changing the IP remotely, a commit must be sent to tell the At2x00 to retain the new network settings.

Field Name			Value
Message Type			79
Message Length			4
Message			
Offsets	Size	Description	Possible values
0,1	UWORD16	Length of message header	0
2	BYTE	Sub-Command	1
3	BYTE	Reserved	

Possible ACK/NACK returned:

ACK / NACK	CODES
ACK	0

See Appendix E

6.3.18 Switch commands

This group of commands explains switches (MUX) control commands. They serve to remotely control the MUX node selection that will feed the AT2x00. Note that while in monitoring, the use of these functions is unpredictable. Normal use of these functions should be used in a remote mode.

Depending on your switch network configuration, more than one switch node (one node per switch) at a time can be used to feed the spectrum analyzer. The At2x00 can handle this and selected nodes are stored in a selected node list.

6.3.18.1 Switch Commands quick table index

S ➔ Sender, R ➔ Receiver, X ➔ Sender and Receiver

Type	Command	PC	HM	HEC	Page	Message Type	
	SWITCH_NETWORK						
	1-256	S	R		73	Select RPTP Number	Set the current switch position
	0x8001	S	R	X	74	Ask For Current RPTP Number	Get Current Switch position
	0x8002	S	R	X	75	Ask For Number of RPTP	Get Maximum Switch position
	0x8003		R		76		Set Wink Switch
	0x8004	S	R		77	Clear RPTP	Turn off a switch position
80	0x8005	S	R	X	78	Select One RPTP	Select 1 switch position
	0x8006	S	R		79	Toggle an RPTP	Toggle 1 switch position
	0x8007	S	R		72	Add an RPTP	Turn on a switch position (non exclusive)
	0x8008	S	R		81	Ask For the List of selected RPTP	Get list of active RPTP
	0x8009	S	R	X	82	Ask For the list of available RPTP	Get list of available RPTP
	0x800A	S	R		83	Allow Sequence Mode	Enable/disable sequence mode for Sunrise MUX
	0x8010	S	R		84	Update SUNRISE switch firmware	Update Sunrise MUX firmware

The complete Command index can be found at Appendix D

6.3.18.2 Select RPTP Number

This command can be transmitted from the CLIENT to the SERVER.

This command instructs the AT2x00 to select new switch position.

Field Name			Value
Message Type			80
Message Length			4
Message			
Offset	Size	Description	Possible values
0,1	UWORD16	Length of message header	0
2,3	UWORD16	RPTP number to select	1 – 256

Possible ACK/NACK returned:

ACK / NACK	CODES
ACK	0

6.3.18.3 Ask For Current RPTP Number

This command can be transmitted from the CLIENT to the SERVER.

This command is used to retrieve from the AT2x00 the currently selected switch position.

Field Name			Value
Message Type			80
Message Length			4
Message			
Offset	Size	Description	Possible values
0,1	UWORD16	Length of message header	0
2,3	UWORD16	Sub-Command	0x8001

Possible ACK/NACK returned:

ACK / NACK	CODES
ACK	0

An additional packet is transmitted to the client containing the MESSAGE RESPONSE.

Field Name			Value
Message Type			80
Message Length			6
Message			
Offset	Size		Possible values
0,1	UWORD16	Length of message header	0
2,3	UWORD16	Sub-Command	0x8001
4,5	UWORD16	Actual RPTP number	• 1 to 256 • Error number 0xF000 to 0xFFFF

6.3.18.4 Ask for Number of RPTP

This command can be transmitted from the CLIENT to the SERVER.

This command is used to retrieve from the AT2x00 the current number of nodes in the switch network.

Field Name			Value
Message Type			80
Message Length			4
Message			
Offset	Size	Description	Possible values
0,1	UWORD16	Length of message header	0
2,3	UWORD16	Sub-Command	0x8002

Possible ACK/NACK returned:

ACK / NACK	CODES
ACK	0

An additional packet is transmitted to the client containing the MESSAGE RESPONSE.

Field Name			Value
Message Type			80
Message Length			6
Message			
Offset		Description	Possible values
0,1	UWORD16	Length of message header	0
2,3	UWORD16	Sub-Command	0x8002
4,5	UWORD16	Total number of RPTP	• 1 to 256 • Error number 0xF000 to 0xFFFF

6.3.18.5 Set Wink Switch

This command can be transmitted from the CLIENT to the SERVER.

This command is used to set any wink switch to any status.

Field Name			Value
Message Type			80
Message Length			10
Message			
	Size	Description	
0,1	UWORD16	Length of message header	
2,3	UWORD16	Sub-Command	0x8003
4,5	UWORD16	Id number of wink switch	1 – 65535
6,7	UWORD16	Tap number of wink switch	1 – 255
8,9	UWORD16	Status we want to impose to the Tap of selected wink switch.	○ 0 = OFF ○ 1 = -6db ○ 2 = ON

Possible ACK/NACK returned:

ACK / NACK	CODES
ACK	0

Temporary

6.3.18.6 Clear RPTP

This command can be transmitted from the CLIENT to the SERVER.

This command instructs the AT2x00 to not select the switch position in the selected node list.

Field Name			Value
Message Type			80
Message Length			6
Message			
Offset	Size	Description	Possible values
0,1	UWORD16	Length of message header	0
2,3	UWORD16	Sub-Command	0x8004
4,5	UWORD16	RPTP number	1 - 256

Possible ACK/NACK returned:

ACK / NACK	CODES
ACK	0

6.3.18.7 Select One RPTP

This command can be transmitted from the CLIENT to the SERVER.

This command instructs the AT2x00 to select only the new switch position in the selected node list.

Field Name			Value
Message Type			80
Message Length			6
Message			
Offset	Size	Description	Possible values
0,1	UWORD16	Length of message header	0
2,3	UWORD16	Sub-Command	0x8005
4,5	UWORD16	RPTP number	1 - 256

Possible ACK/NACK returned:

ACK / NACK	CODES
ACK	0

6.3.18.8 Toggle an RPTP

This command can be transmitted from the CLIENT to the SERVER.

This command instructs the AT2x00 to change the selection state in the selected node list.

Field Name			Value
Message Type			80
Message Length			6
Message			
Offset	Size	Description	Possible values
0,1	UWORD16	Length of message header	0
2,3	UWORD16	Sub-Command	0x8006
4,5	UWORD16	RPTP number	1 - 256

Possible ACK/NACK returned:

ACK / NACK	CODES
ACK	0

6.3.18.9 Add an RPTP to current selection

This command can be transmitted from the CLIENT to the SERVER.

This command instructs the AT2x00 to add the specified switch position to the selection list.

Field Name			Value
Message Type			80
Message Length			6 (for commands 0x8004 to 0x8007), 4 for the others
Message			
	Size	Description	Possible values
0,1	UWORD16	Length of message header	0
2,3	UWORD16	Sub-Command	0x8007
4,5	UWORD16	RPTP number	1 - 256

Possible ACK/NACK returned:

ACK / NACK	CODES
ACK	0

6.3.18.10 Ask for the list of selected RPTP

This command can be transmitted from the CLIENT to the SERVER.

This command is used to retrieve the selected node list from the AT2x00.

Field Name		Value	
Message Type		80	
Message Length		4	
Message			
Offset	Size	Description	Possible values
0,1	UWORD16	Length of message header	0
2,3	UWORD16	Sub-Command	0x8008

Possible ACK/NACK returned:

ACK / NACK	CODES
ACK	0

An additional packet is transmitted to the client containing the MESSAGE RESPONSE.

Field Name		Value	
Message Type		80	
Message Length		Variable	
Message			
Offset		Description	Possible values
0,1	UWORD16	Length of message header	0
2,3	UWORD16	Sub-Command	0x8008
4,5	UWORD16	Number of selected RPTP	• 1 to 256 • Error number 0xF000 to 0xFFFF
6,7	UWORD16	First RPTP number	
•	•	•	•
N, N+1	UWORD16	Last RPTP number	

6.3.18.11 Ask for the list of available RPTP

This command can be transmitted from the CLIENT to the SERVER.

This command is used to retrieve the list of available switch node from the AT2x00.

Field Name			Value
Message Type			80
Message Length			4
Message			
Offset	Size	Description	Possible values
0,1	UWORD16	Length of message header	0
2,3	UWORD16	Sub-Command	0x8009

Possible ACK/NACK returned:

ACK / NACK	CODES
ACK	0

An additional packet is transmitted to the client containing the MESSAGE RESPONSE.

Field Name			Value
Message Type			80
Message Length			Variable
Message			
Offset	Size	Description	Possible values
0,1	UWORD16	Length of message header	0
2,3	UWORD16	Sub-Command	0x8009
4,5	UWORD16	Number of Available RPTP	• 1 to 256 • Error number 0xF000 to 0xFFFF
6,7	UWORD16	First RPTP number	
•	•	•	•
N, N+1	UWORD16	Last RPTP number	

6.3.18.12 Allow Sequence Mode

This command can be transmitted from the CLIENT to the SERVER.

This command activates or deactivates the sequence mode of the switch network. Please note that while the deactivation is mandatory for the AT2000, the activation is only requested. The AT2000 might decide not to activate the sequence mode.

This is available with Sunrise's switches only.

Field Name			Value
Message Type			80
Message Length			6
Message			
Offset	Size	Description	Possible values
0,1	UWORD16	Length of message header	0
2,3	UWORD16	Sub-Command	0x800A
4,5	UWORD16	Sequence mode value	• 1: Allow sequence mode • 0: Prevent sequence mode

Possible ACK/NACK returned:

ACK / NACK	CODES
ACK	0

6.3.18.13 Update SUNRISE Switch firmware

This command can be transmitted from the CLIENT to the SERVER.

This command is used to do an update of the firmware for Sunrise switch. All switches in the switch network will be updated. It will produce three consecutives responses. These responses will tell to the remote host whether the upgrade was successful or not.

N.B.: The firmware file must be downloaded before this command.

Field Name			Value
Message Type			80
Message Length			4
Message			
Offset	Size	Description	Possible values
0,1	UWORD16	Length of message header	0
2,3	UWORD16	Sub-Command	0x8010

Possible ACK/NACK returned:

ACK / NACK	CODES
ACK	0

Middle return

Field Name			Value
Message Type			80
Message Length			6
Message			
	Size	Description	Possible values
0,1	UWORD16	Length of message header	0
2,3	UWORD16	Sub-Command	0x8010
4,5	UWORD16	Flag the presence of firmware file.	121 = Update on the way.

End return:

Field Name			Value
Message Type			80
Message Length			6
Message			
Offset	Size	Description	Possible values
0,1	UWORD16	Length of message header	0
2,3	UWORD16	Sub-Command	0x8010

4,5	UWORD16	Sequence mode value	• 0 = the firmware update is successful. • 10 = the switch network does not contain SUNRISE switch. • 120 = there is no firmware file. • 122 = Update Error • 252 = File Transfer Error • 253 = Update File Corrupted • 254 = Cancelled • 255 = Waiting

6.4 Remote

This group of commands is used to:

- Get/set particular hardware settings.
- Perform mode specific requests.
- Put the At2x00 in specific sub-modes.

6.4.1 Common Commands quick table index

S ➔ Sender, R ➔ Receiver, X ➔ Sender and Receiver

Type	Command	PC	HM	HEC	Page	Message Type	Description
5		R	S	X	100	Acquisition Trace	Trace sent in response to a Trigger in SA,SS,TDMA,DCP
6		X				Control Spectrum	
7	**QAM**						
	0	R	S		108	QAM Constellation	Trace sent in response to a Trigger
	1	R	S		109	QAM Statistics	Trace sent in response to a Trigger
	2	R	S		110	QAM Equalizer	Trace sent in response to a Trigger
	3	S	S		111	QAM Diagnostic	Trace sent in response to a Start Diagnostics command
	3	R	S		113	Start QAM Diagnostics	Request to send a Start Diagnostics
	10	S	R		114	Set Equalizer Settings	Set the 3 equalizers settings
	11	S	R		115	Get Equalizer Settings	Requests the 3 equalizers settings
	12	S	R		116	Set Normalization File	Set which normalization to apply
	13	S	R		117	Get Normalization File	Retrieve which normalization is currently apply
8	**DCP**						
	1	S	R		104	Do Digital Channel Measure	
9	**TDMA**						
	1	S	R				When in Manual Trigger mode, send a trigger
10	**BAR modes (SM1, SM2, SM6, Auto-Test)**						
	0	R	S		118	Channel Trace	Trace sent in response to a Trigger in SM1, SM2, SM6 + Auto-Test traces
11	**Auto-Test mode (Auto-Test)**						
	0	R	S		105	Auto-Test Trace	A single trace from the Auto-Test measure
20	**GENERAL_COMMAND**						
	1	S	R		87	Get Settings	Requests the settings
	2	S	R		88	Set Settings	Sets the settings
89		R	S		101	POLLING	

The complete Command index can be found at Appendix D

6.4.2 Get Settings

This command can be transmitted from the CLIENT to the SERVER.

The purpose of this command is to retrieve the current settings of the AT2x00.

Field Name		Value	
Message Type		20	
Message Length		4	
Message			
Offsets		Description	Possible values
0,1	UWORD16	Length of message header	0
2	BYTE	Sub-Command	1
3	BYTE	Reserved	

Possible ACK/NACK returned:

ACK / NACK	CODES
ACK	0

An additional packet is transmitted to the client containing the MESSAGE RESPONSE. The mode specific packet descriptions are described in the "Set Settings" command.

Field Name		Value	
Message Type		20	
Message Length		Variable	
Message			
Offsets	Size	Description	Possible values
0,1	UWORD16	Length of message header	0
2	BYTE	Sub-Command	1
3	BYTE	Reserved	0
4	BYTE	Reserved	0
System configuration for actual mode. The different packet descriptions are described here for SA, DCP, QAM, TDMA, SM1, SM2, SM6, Auto-Test			

6.4.3 Set Settings

This command can be transmitted from the CLIENT to the SERVER.

The purpose of this command is to setup the At2x00 hardware to certain specific values.

Field Name			Value
Message Type			20
Message Length			Variable
Message			
Offsets		Description	Possible values
0,1	UWORD16	Length of message header	0
2	BYTE	Sub-Command	2
3	BYTE	Reserved	0
4	BYTE	Reserved	0
System configuration for actual mode. The different packet descriptions are described here for SA, DCP, QAM, TDMA, SM1, SM2, SM6, Auto-Test			

Possible ACK/NACK returned:

ACK / NACK	CODES
ACK	0

Tables of modes configuration for Get Settings and Set Settings.

SA			
Message (cont.)			
Offsets		Description	Possible Value
5	BYTE	Actual Mode Number	0, See Mode Number Appendix
6	BYTE	Reserved	0
7	BYTE	Reserved	0
8,9	SWORD16	External temperature	Temperature in ºC
10 - 11	UWORD16	Attenuator value	0 – 65dB by 5dB steps
12, - 3	SWORD16	Internal Frequency	
14 - 21	DOUBLE	Central Frequency in hertz	See Frequencies
22 - 29	DOUBLE	Span Value	See Span
30 - 31	UWORD16	Zero Span Value	• 0 ➔ LOGAMP • 1 ➔ AM • 2 ➔ FM
32 - 33	UWORD16	Video channel if selected	
34 - 35	UWORD16	Audio channel if selected	
36 - 37	UWORD16	Sweep Time	See Sweep Times in msec
38 - 45	DOUBLE	Horizontal time	See Horizontal Times in msec
46 - 53	DOUBLE	Resolution bandwidth	See Resolution Bandwidth
54 - 61	DOUBLE	Video bandwidth	See Video Bandwidth
62 - 63	UWORD16	Average Length	
64	BYTE	Average Type	See Average Types
65	BOOL	V2 is a noise marker	
66	BYTE	FM horizontal Marker	
67	BOOL	Reserved	
68 - 69	UWORD16	Vertical scale	
70	BYTE	Audio Volume	
71	BYTE	Trigger type	See Trigger Types
72	BOOL	Vertical marker 1 displayed	
73	BOOL	Vertical marker 2 displayed	
74	BOOL	Horizontal marker 1 displayed	
75	BOOL	Horizontal marker 2 displayed	
76 - 83	DOUBLE	Vertical marker 1 position	
84 - 91	DOUBLE	Vertical marker 2 position	
92 - 93	UWORD16	Horizontal marker 1 position	
94 – 95	UWORD16	Horizontal marker 2 position	

DCP			
Message (cont.)			
Offsets	Type	Description	
5	BYTE	Actual Mode Number	3, See Mode Number Appendix
6	BYTE	Reserved	
7	BYTE	Reserved	
8 – 9	UWORD16	Attenuator value	0 – 65dB by 5dB steps
10 - 17	DOUBLE	Central Frequency in hertz	See Frequencies
18 - 19	UWORD16	Video channel if selected	
20 - 21	UWORD16	Audio channel if selected	
22 - 23	UWORD16	Vertical scale	Default = 10
24 - 25	UWORD16	Average Type	See Average Types
26 - 33	DOUBLE	Bandwidth in hertz	Between 200000 Hz and the maximum Span

QAM			
Message (cont.)			
Offsets	Type	Description	Possible Values
5	BYTE	Actual Mode Number	15, See Mode Number Appendix
6	BYTE	Version	103
7	BYTE	Standard Type	• 0 => No FEC Decoding • 1 => J83AnnexA • 2 => J83AnnexB • 3 => J82AnnexC • 4 => No FEC Decoding 6 MHz • 5 => No FEC Decoding 8 MHz • 6 => Upstream QAM16
8	BYTE	Modulation Type	○ 3 = QAM64 ○ 5 = QAM256
9	BYTE	Polarity	○ 0 = Normal ○ 1 = Inverse ○ 2 = Auto
10,11	UWORD16	MER threshold	0
12-15	FLOAT	BER Pre threshold	
16-19	FLOAT	BER Post threshold	
20,21	UWORD16	Attenuator value	0 – 65dB by 5dB steps
22-29	DOUBLE	Central Frequency in hertz	See Frequencies
30,31	UWORD16	Channel providing from Channel Plan	
32	BOOL	Usage of Channel Plan	○ TRUE ○ FALSE
33	BOOL	Noise Near Noise Correction	○ 0 = Off ○ 1 = On
34-37	UWORD32	Ideal Symbol Rate in Mega Symbol by second	
38-41	UWORD32	SES Threshold	
42	BYTE	Display Type	○ 0 = Constellation ○ 1 = Statistics ○ 2 = Equalizer
43	BOOL	Grid Status	○ 0 = Off ○ 1 = On
44	BOOL	Template Status	○ 0 = Off ○ 1 = On
45	BYTE	Interleave I (QAM 256 only)	
46	BYTE	Interleave J (QAM 256 only)	
47	BYTE	Filter Type (only for constellation)	○ 0 = None ○ 1 = Cyclic ○ 2 = Continuous
48-51	UWORD32	○ Length of statistics or ○ Filter size (in constellation view only)	○ Time in minutes: 1 to 60 ○ Filter size
52	BOOL	Start Statistics	○ TRUE ○ FALSE
53	BYTE	Zoom Type	○ 0 = none ○ 1 = zoom 4x ○ 2 = zoom 16x ○ Etc…
54	BYTE	First zoom level quadrant	This byte is present only if zoom type >= 1 or version > 100

55	BYTE	Second zoom level quadrant	This byte is present only if zoom type >= 2 or version > 100
56 – 59	UWORD32	High Filter	• 0 => HIGH_35MHZ • 1 => HIGH_78MHZ • 2 => HIGH_164MHZ • 3 => HIGH_270MHZ • 4 => OFF • 7 => HIGH_360MHZ • 5 => HIGH_450MHZ • 6 => HIGH_540MHZ • 9 => HIGH_0MHZ
60 - 63	UWORD32	Low Filter	• 0 => LOW_45MHZ • 1 => LOW_88MHZ • 2 => LOW_174MHZ • 3 => LOW_280MHZ • 5 => LOW_460MHZ • 6 => LOW_550MHZ • 7 => LOW_370MHZ • 8 => NO_CHANGE • 9 => LOW_1500MHZ • 10 => AUTO

Last 3 bytes are only present if version is greater than 100.

Please note that after the QAM settings are set, the AT2000 will perform an Attenuator search for 4 seconds during which it will not answer any messages.

SM1, SM2, SM6				
Message (cont.)				
Offsets		Type	Description	Possible Values
5		BYTE	Actual Mode Number	4, 5 or 6. See Mode Number Appendix
6		BYTE	Reserved	
7		BYTE	Reserved	
8,9		SWORD16	External temperature	Temperature in ºC
10,11		UWORD16	Attenuator value	0 – 65dB by 5dB steps
12,13		SWORD16	Internal Frequency	
14-21		BYTE [8]	Reserved	
22		BYTE	Current Carrier Number	(Always 0 for mode SM1 and SM2)
23		BYTE	Number of measured carrier	○ SM1 = 1 ○ SM2 = 1 ○ SM6 = 6
24,25		SWORD16	Vertical scale	Default = 10
Carrier # 1	26	BYTE	Type of measures	○ 0 => Frequency ○ 1 > Video Channel ○ 2 => Audio Channel
	27	BOOL	Active Carrier	
	28-35	DOUBLE	Central Frequency	See Frequencies
	36,37	SWORD16	Video Channel if selected	
	38,39	SWORD16	Audio Channel if selected	
C #2	40 – 53		Channel 2	(SM6 only)
C #3	54 – 67		Channel 3	(SM6 only)
C #4	68 – 81		Channel 4	(SM6 only)
C #5	82 – 95		Channel 5	(SM6 only)
C #6	96 – 109		Channel 6	(SM6 only)

The Type of Measures Field is used to determine if the Frequency, Video channel or Audio channel field will be used to determine the frequency.

If Frequency is used and the frequency is used in a Video or Audio channel, the channel will be deducted. If a channel is used, the frequency will be deducted from the channel plan.

A note about SM2:

SM2 mode is particulier. Only 1 carrier is select in the settings, but if the selected frequency (either in Frequency mode or Video channel mode) is a video channel, every trace will return 2 carriers, the video carrier and the audio carrier.

If the frequency doesn't exist in the channel plan or it points to an audio channel, only 1 carrier will be returned active.

Auto Test			
Offsets	Type	Description	Possible Values
5	BYTE	Actual Mode Number	7, See Mode Number Appendix
6 - 7	UWORD16	Attenuator value	0 – 65dB by 5dB steps
8 - 15	UWORD64	Test Bit-field	• BIT 0 : CHANNEL_FREQUENCY • BIT 1 : CHANNEL_AMPLITUDE • BIT 2 : AUDIO1_FREQUENCY • BIT 3 : AUDIO1_AMPLITUDE • BIT 4 : AUDIO2_FREQUENCY • BIT 5 : AUDIO2_AMPLITUDE • BIT 6 : HUM • BIT 7 : CTN_NOISE • BIT 8 : CTN_RATIO • BIT 9 : CTN_FREQNORMALIZE • BIT 10 : CSO_NOISE • BIT 11 : CSO_RATIO • BIT 12 : CSO_FREQNORMALIZE • BIT 13 : CTB_NOISE • BIT 14 : CTB_RATIO • BIT 15 : CTB_FREQNORMALIZE • BIT 16 : DOM • BIT 17 : INCHANNEL • BIT 51 : DCP • BIT 52 : MPEG LOCK • BIT 53 : FEC LOCK • BIT 54 : SYMBOL LOCK • BIT 55 : QAM_MER • BIT 56 : QAM_BERPRE • BIT 57 : QAM_BERPOST • BIT 58 : QAM_ENM • BIT 59 : QAM_EVM • BIT 60 : QAM_ES • BIT 61 : QAM_SES • BIT 62 : QAM_FLS • BIT 63 : QAM_UNAV
16	BYTE	Kind of channels to perform measure on (bit-field)	• BIT 0 : Analog channels • BIT 1 : Digital Channels
17 – 18	UWORD16	Qam Start of measure dwell time	Number of seconds to wait before getting QAM information/measures.
19 – 20	UWORD16	Channel plan start index	Start index in the channel plan to start the measures from (inclusive)
21 - 22	UWORD16	Channel plan stop index	End index in the channel plan to start the measures from (inclusive)

TDMA			
Offsets	Type	Description	Possible Values
5	BYTE	Actual Mode Number	14, See Mode Number Appendix
6 – 7	BYTE	Reserved	0
8 – 9	SWORD16	External Temperature	
10 – 11	UWORD16	Attenuator value	0 – 65dB by 5dB steps
12– 13	SWORD16	Internal Frequency	
14– 21	DOUBLE	Central Frequency in hertz	See Frequencies
22– 23	SWORD16	Channel	
24– 25	SWORD16	Video channel if selected	
26– 27	SWORD16	Audio channel if selected	
28	BYTE	Trigger type	o 0 = FREE_RUN o 1 = SINGLE o 2 = CONTINUOUS
29	BYTE	Trigger slope	o 0 = RISING_EDGE o 1 = FALLING_EDGE
30	BYTE	Text Position	
31	BYTE	Mean type	See Average Types
32– 33	UWORD16	Average Length	2 to 50
34– 35	UWORD16	Noise Marker	
36– 37	SWORD16	Trigger level	
38– 39	UWORD16	Delay after trigger	
40 – 41	UWORD16	Delay before trigger	
42	BOOL	Clear acquisition	
43	BOOL	Horizontal time is automatically selected	
44	BOOL	Resolution bandwidth is automatically selected	
45	BOOL	Video bandwidth automatically selected	
46 – 53	DOUBLE	Horizontal time	See Horizontal Times
54 – 61	DOUBLE	Resolution bandwidth	See Resolution Bandwidth
62 – 69	DOUBLE	Video bandwidth	See Video Bandwidth
70 – 71	UWORD16	Vertical Scale	
72 – 73	UWORD16	Signal bandwidth regarding RBW	Between 200000 Hz and the maximum Span
74	BOOL	BW Marker	
75	BOOL	Vertical Marker 1 displayed	
76	BOOL	Vertical Marker 2 displayed	
77	BOOL	Horizontal Marker 1 displayed	
78	BOOL	Horizontal Marker 2 displayed	
79 – 82	FLOAT	Vertical Marker 1 position	
83 – 86	FLOAT	Vertical Marker 2 position	
87 – 88	UWORD16	Horizontal Marker 1 position	
89 – 90	UWORD16	Horizontal Marker 1 position	
91 – 92	UWORD16	Vertical Marker 1 amplitude	
93 – 94	UWORD16	Vertical Marker 2 amplitude	

Depth of Modulation (PRELIMINARY)			
Offsets	Type	Description	Possible Values
5	BYTE	Actual Mode Number	11, See Mode Number Appendix
6 - 7	BYTE [2]	Reserved	0
8	BYTE	Frequency Type	• 0 => Frequency • 1 => Video • 2 => Audio
9	BYTE	SubMode	
10,11	UWORD16	Attenuator value	0 – 65dB by 5dB steps
12-19	DOUBLE	Center Frequency	See Frequencies
20,21	UWORD16	Video channel	
22,23	UWORD16	Audio channel	
24,25	UWORD16	Vertical scale	Default = 10
26	BYTE	Field number	1 or 2
27	BYTE	Line Number	7 to 35

HUM (PRELIMINARY)			
Offsets	Type	Description	Possible Values
5	BYTE	Actual Mode Number	8, See Mode Number Appendix
6 – 7	BYTE [2]	Reserved	0
8	BYTE	SubMode	
9 – 10	UWORD16	Horizontal Marker Positions	
11 – 12	UWORD16	Attenuator value	0 – 65dB by 5dB steps
13 - 16	UWORD32	Center Frequency	See Frequencies
17 – 18	UWORD16	Video channel	
19 - 20	UWORD16	Audio channel	

Frequency Response (PRELIMINARY)			
Offsets	Type	Description	Possible Values
5	BYTE	Actual Mode Number	10, See Mode Number Appendix
6.7	BYTE [2]	Reserved	0
8	BOOL	Display Markers	
9	BOOL	Search for Optimum Attenuator	
11	BOOL	Are markers in MIN/MAX Auto position?	
12	BYTE	View	
13	BYTE	Field Number	
14,15	UWORD16	Line number	
16,17	UWORD16	Attenuator value	0 – 65dB by 5dB steps
18-25	DOUBLE	Center Frequency	See Frequencies
26,27	UWORD16	Marker 1 position	
28,29	UWORD16	Marker 2 position	
30,31	UWORD16	Video channel	
32,33	UWORD16	Audio channel	
34-81	DOUBLE [6]	Multi-burst frequencies	

C/N, CSO, CTB (PRELIMINARY)			
Offsets	Type		Possible Values
5	BYTE	Actual Mode Number	9, See Mode Number Appendix
6,7	BYTE [2]	Reserved	0
8,9	UWORD16	Attenuator value	0 – 65dB by 5dB steps
10-17	DOUBLE	Center Frequency	See Frequencies
18,19	UWORD16	Video channel	
20,21	UWORD16	Audio channel	
22	BYTE	Average Type	See Average Types
23	BYTE	Sub Mode (see below)	
24	BOOL	Use PS filters	
25	BOOL	Start Measure?	
26-29	SWORD32	CTN In Channel Frequency Offset	
30-33	SWORD32	CTN Bandwidth Correction	
34-37	SWORD32	CSO Low Frequency offset 1	
38-41	SWORD32	CSO Low Frequency offset 2	
42-45	SWORD32	CSO Upper Frequency offset 1	
46-49	SWORD32	CSO Upper Frequency offset 2	
50	BOOL	CSO Low Frequency offset 1 measure	
51	BOOL	CSO Low Frequency offset 2 measure	
52	BOOL	CSO Upper Frequency offset 1 measure	
53	BOOL	CSO Upper Frequency offset 2 measure	
54-57	SWORD32	CTB In Channel Frequency Offset	
58	BYTE	Reserved	
59	BYTE	Field Number	
60-61	UWORD16	Line Number	

6.4.4 Acquisition trace

This command can be transmitted from the SERVER to the CLIENT.

The content is an acquisition trace for most of the LOG_AMP modes. This trace is according to the current settings of the AT2x00.

Field Name			Value
Message Type			5
Message Length			626
Message			
Offsets	Size	Description	
0	BYTE	Client information	4 Bits MSB = Total number of client 4 Bits LSB = Index of the client
1-625	BYTE	Aligned Image of trace.	See ***"Realignment"*** algorithm to retrieve image One image = 500 points of 10bits. (0 to 1023) 0 = bottom of screen, 1023 = top of screen.

There is no response from this packet.

6.4.5 Polling

This command can be transmitted from the SERVER to the CLIENT.

This command is used only when we are using an RF communication type. This command is transmit by the SERVER (HM) at regular intervals. It is used to inform the system that a new user can logon to this SERVER (HM).

Field Name			Value
Message Type			89
Message Length			20
Message			
Offsets	Size		Possible values
0 - 19	BYTE	Future	

There is no response from this packet.

Obsolete

6.4.6 Trigger

This command can be transmitted from the CLIENT to the SERVER.

This command must be transmit by the HOST at the start of each remote session. This command indicates to the HM the number of acquisitions to do before transmitting the results. After transmission, the HM will wait for another TRIGGER command before sending again.

This command is valid in the following modes: SA, SS, DCP, SM1, SM2, SM6, HUM, NI, FR, DM and TDMA
This command is not valid in the following modes: Auto-Test, QAM

Please note that in most modes, the trigger command directs the transmission of traces. However, certain modes have more advanced measure systems such as DCP and NI.

Field Name			Value
Message Type			98
Message Length			2 or 3
Message			
Offsets	Size	Description	Possible values
0	BYTE	Number of trace to perform before sending the results	○ 0 => Transmit without waiting for an other TRIGGER command ○ 1 – 255 => The number of acquisitions before transmitting the results
1	BOOL	Acquisition buffer reset	
2	BYTE	Generation Mode. This byte was added for the AT1800 and is not processed on AT2x00.	• 0 => OFF • 1 => Single Acquisition • 2 => Continous

Possible ACK/NACK returned:

ACK / NACK	CODES
ACK	0, 1
NACK	1, 2, 3, 7

6.4.7 Spectrum Analyzer

This section regroups the commands that can be performed while in the Spectrum analyzer mode.

6.4.7.1 Control Spectrum

This command can be transmitted from the CLIENT to the SERVER.

This is the OLD way of sending settings to the AT2x00. You should use the Set Settings command.

Field Name			Value
Message Type			6
Message Length			86
Message			
Offsets	Size	Description	Possible values
0 –1	SWORD16	Reset acquisition buffer	○ 1: reset ○ 0: no reset
2 –3	SWORD16	Reserved	
4 – 5	SWORD16	Attenuator	0 – 65dB by 5dB steps
6 – 7	SWORD16	Attenuator offset	-10 to 10
8 – 15	DOUBLE	Central Frequency in hertz	See Frequencies
16 – 23	DOUBLE	Span	See Span
24 – 25	SWORD16	Type of Zero Span mode	○ 0 = LOG ○ 1 = AM ○ 2 = FM
26 – 27	SWORD16	Sweep Time	See Sweep Times
28 – 35	DOUBLE	Horizontal Time	See Horizontal Times
36 – 43	DOUBLE	Resolution Bandwidth	See Resolution Bandwidth
44 – 51	DOUBLE	Video Bandwidth	See Video Bandwidth
52 – 59	DOUBLE	Marker vertical #1	
60 – 67	DOUBLE	Marker vertical #2	
68 – 69	SWORD16	Marker horizontal #1	
70 – 71	SWORD16	Marker horizontal #2	
72-79	BYTES	Reserved	
80 – 81	SWORD16	Trace Key	See Average Types
82 – 83	BYTES	Reserved	
84 – 85	SWORD16	Trigger Type	See Trigger Types

Possible ACK/NACK returned:

ACK / NACK	CODES
ACK	0, 1
NACK	1, 2, 3

DEPRECATED

6.4.8 DCP

This section regroups the commands that can be performed while in the Digital Channel Power mode.

6.4.8.1 Do Measures

This command can be transmitted from the CLIENT to the SERVER.

This Command is used to ask the At2x00 to make DCP measures.

Field Name		Value	
Message Type		8	
Message Length		12	
Message			
Offsets	Size	Description	
0,1	UWORD16	Length of message header	0
2	BYTE	Do Measures	0x10
3	BYTE	Reserved	0x01
4-7	UWORD32	Reserved	0
8-11	UWORD32	Reserved	0

Possible ACK/NACK returned:

ACK / NACK	CODES
ACK	0

An additional packet is transmitted to the client containing the MESSAGE RESPONSE.

Field Name		Value	
Message Type		8	
Message Length		12	
Message			
Offsets	Size	Description	Possible values
0,1	UWORD16	Length of message header	0
2	BYTE	Do Measures	0x10
3	BYTE	Reserved	0x01
4-11	DOUBLE	Measure Result	

6.4.9 Auto Test

This section regroups the commands that can be performed while in Auto Test mode.

6.4.9.1 Auto Test Measures

This command can be transmitted from the SERVER to the CLIENT.

This message is used to transmit data of a carrier for the Auto-Test modes.

Field Name				Value
Message Type				11
Message Length				Variable
Message				
Offsets		Size		Possible values
0,1		UWORD16	Length of message header	0
2		BYTE	Sub-Command	0
3		BYTE	Reserved	0
4,5		UWORD16	Attenuator	
6 - 7		UWORD16	Number Of Channels	
8 - 15		UWORD64	Measures Bit-field	For Bit number see Autotest Get/Set Settings
Channel 1		UWORD16	Channel Index	
Channel 1		BYTE	Number of Measures	
Channel 1	Measure 1	BYTE	Measure Test Bit	For Bit number see Autotest Get/Set Settings
Channel 1	Measure 1	BYTE	Measure Length	
Channel 1	Measure 1	BYTE	Data Type of the following field	0 ➔ Invalid data type 1 ➔ CHAR 2 ➔ BYTE 3 ➔ SWORD16 4 ➔ UWORD16 5 ➔ SWORD32 6 ➔ UWORD32 7 ➔ SWORD64 8 ➔ UWORD64 9 ➔ FLOAT 10 ➔ DOUBLE
Channel 1	Measure 1	Any known C type	Measured Value	
Channel 1	…			
Channel 1	Measure Y			
…				
Channel X				

6.4.10 TDMA

This section regroups the commands that can be performed while in Time Domain Analyzer mode.

6.4.10.1 Do Trigger

This command can be transmitted from the CLIENT to the SERVER.

This Command is used to restart the wait of trigger condition on trace.

It must not be confused with the general Trigger command, which directs the transmission of traces. This command directs the acquisition of traces.

Field Name			Value
Message Type			9
Message Length			4
Message			
Offsets	Size	Description	Possible values
0,1	UWORD16	Length of message header	0
2	BYTE	Do Trigger Command	1
3	BYTE	Reserved	0x10

Possible ACK/NACK returned:

ACK / NACK	CODES
ACK	0

Untested

6.4.11 QAM

This section regroups the commands that can be performed while in QAM mode.

6.4.11.1 QAM Messages common data bloc

The following packets explain QAM results messages. All QAM results messages share some data that are common to all display type of that mode. These shared data took up the first 44 bytes of message and are listed below: The type of message results can be known by the third byte of this common data structure, which is the display type.

Field Name			Value
Message Type			7
Message Length			Command Dependant
Message			
Offsets	Size	Description	Possible values
0,1	UWORD16	Length of message header	
2	BYTE	Actual display type of QAM mode	• 0 = Constellation • 1 = Statistic • 2 = Equalizer • 3 = Diagnostic
3	BYTE	Polarity	• 0 = Normal • 1 = Reverse
4,5	UWORD16	Optimum attenuator value	
6-9	UWORD32	Real Symbol Rate	
10-13	FLOAT	BER_Pre	
14-17	FLOAT	BER_Post	
18,19	UWORD16	MER	
20,21	UWORD16	ENM	
22,23	UWORD16	EVM	
24-27	UWORD32	ES	
28-31	UWORD32	SES	
32-35	UWORD32	FLS	
36-39	UWORD32	Unavailable	
40	BOOL	Symbol Lock	• 0 = Unlock • 1 = Lock
41	BOOL	Forward Error Code Lock	• 0 = Unlock • 1 = Lock
42	BOOL	Stream Lock	• 0 = Unlock • 1 = Lock
43	BYTE	Reserved	

6.4.11.1.1 Constellation

This command can be transmitted from the SERVER to the CLIENT.

This message is used to transmit some available constellation points to the HOST.

Field Name		Value	
Message Type		7	
Message Length		Variable	
Message			
Offsets	Size	Description	Possible values
0-43		QAM common data bloc	
44,45	UWORD16	Number of constellation points in that message	
46	BYTE	I (InPhase Component) (point #1)	
47	BYTE	Q (Quadrature Component) (point #1)	
•	•	•	•
…	BYTE	I (InPhase Component) (point #n)	
…	BYTE	Q (Quadrature Component) (point #n)	

Possible ACK/NACK returned:

ACK / NACK	CODES
ACK	0

6.4.11.1.2 Statistic

This command can be transmitted from the SERVER to the CLIENT.

This message is used to transmit available statistic data to the HOST.

Field Name			Value
Message Type			7
Message Length			56
Message			
Offsets	Size	Description	Possible values
0-43		QAM common data bloc	
44-47	UWORD32	Number of seconds elapsed since the start of statistic	
48-51	FLOAT	Mean BER_Pre	
52-55	FLOAT	Mean BER_Post	

Possible ACK/NACK returned:

ACK / NACK	CODES
ACK	0

6.4.11.1.3 Equalizer

This command can be transmitted from the SERVER to the CLIENT.

This message is used to transmit available equalizer data to the HOST.

Field Name		Value	
Message Type		7	
Message Length		Variable	
Message			
Offsets	Size		Possible values
0-43		QAM common data bloc	
44	BYTE	Number of "pre tap"	
45	BYTE	Number of "post tap"	
46,47	SWORD16	Real (point #1) (pre tap)	
48,49	SWORD16	Image (point #1) (pre tap)	
•	•	•	•
78,79	SWORD16	Real (point #1) (post tap)	
80,81	SWORD16	Image (point #1) (post tap)	
•	•	•	•
138,139	SWORD16	Real (point #n) (post tap)	
140,141	SWORD16	Image (point #n) (post tap)	

Possible ACK/NACK returned:

ACK / NACK	CODES
ACK	0

6.4.11.1.4 Diagnostic

This command can be transmitted from the SERVER to the CLIENT.

This message is used to transmit diagnostic result to the Host.

Field Name			Value
Message Type			7
Message Length			284
Message			
Offsets	Size	Description	Possible values
0-43		Common QAM Data block	
44	BYTE	Reserved	
45	BYTE	Diagnostic error type	• 0x00 = no error • 0x80 = Time Out error • 0x81 = Out of Lock error • 0x82 = Out of Range error
46,47	UWORD16	Reserved	
48-51	SWORD32	Mer	
52-55	SWORD32	Enm	
56-59	SWORD32	Evm	
60-63	SWORD32	System Noise	
64-67	SWORD32	CW Interference	
68-71	SWORD32	Frequency Response	
72-75	SWORD32	Echo Margin	
76-79	SWORD32	Echo Margin Tap Index	
80-83	SWORD32	Compression	
84-87	SWORD32	Digital Hum	
88-91	SWORD32	Phase Noise	
92-95	SWORD32	IQ Gain Diff.	
96-99	SWORD32	IQ Phase Diff.	
100-103	SWORD32	Carrier Offset	
104-107	SWORD32	Symbol Rate PPM	
108-235	BYTE [128]	Reserved	
236	BOOL	Power level Flag (Reserved)	
237	BOOL	Mer Flag (Reserved)	
238	BOOL	Enm Flag (Reserved)	
239	BOOL	Evm Flag (Reserved)	
240	BOOL	System Noise Flag	
241	BOOL	CW Interference Flag	
242	BOOL	Frequency Response Flag	
243	BOOL	Echo Margin Flag	
244	BOOL	Echo Margin Tap Index	
245	BOOL	Compression Flag	
246	BOOL	Digital Hum Flag	
247	BOOL	Phase Noise Flag	
248	BOOL	IQ Gain Diff. Flag	
249	BOOL	IQ Phase Diff. Flag	
250	BOOL	Carrier Offset Flag	
251	BOOL	Symbol Rate PPM Flag	
252-283	BYTE [32]	Reserved	

Possible ACK/NACK returned:

ACK / NACK	CODES
ACK	0

6.4.11.2 Start Diagnostic

This command can be transmitted from the CLIENT to the SERVER.

This command is used to start diagnostic on the present QAM channel. Please consult Appendix E for the QIA timings.

Field Name			Value
Message Type			7
Message Length			30
Message			
Offsets	Size	Description	Possible values
0,1	UWORD16	Message's header length	0
2	BYTE	Sub-Command	3
3	BYTE	Reserved	0x10
4	BOOL	Power level Flag	
5	BOOL	Mer Flag	
6	BOOL	Enm Flag	
7	BOOL	Evm Flag	
8	BOOL	System Noise Flag	
9	BOOL	CW Interference Flag	
10	BOOL	Frequency Response Flag	
11	BOOL	Echo Margin Flag	
12	BOOL	Echo Margin Tap Index Flag	
13	BOOL	Compression Flag	
14	BOOL	Digital Hum Flag	
15	BOOL	Phase Noise Flag	
16	BOOL	IQ Gain Diff. Flag	
17	BOOL	IQ Phase Diff. Flag	
18	BOOL	Carrier Offset Flag	
19	BOOL	Symbol Rate PPM Flag	
20-29	BOOL	(Reserved for future use)	

Possible ACK/NACK returned:

ACK / NACK	CODES
ACK	0

6.4.11.3 Set Equalizer Settings

This command can be transmitted from the CLIENT to the SERVER.

This message is used to transmit the QAM equalizer settings to the AT2000

It only sets the Inband equalizer setup and the FFE and DFE equalizer. To set all the settings, use the Set Settings command instead.

Field Name			Value
Message Type			7
Message Length			7
Message			
Offsets	Size	Description	Possible values
0,1	UWORD16	Message's header length	
2	BYTE	Sub-Command	10
3	BYTE	Reserved	0
4	BYTE	Inband Equalizer setup.	• 0 =Off • 1 = Unfreeze • 2 = Freeze • 3 = Special
5	BYTE	FFE Equalizer Length	• 0=Off • 1=On
6	BYTE	DFE Equalizer Length	• 8 • 16 • 20 • 24

Possible ACK/NACK returned:

ACK / NACK	CODES
ACK	0

6.4.11.4 Get Equalizer Settings

This command can be transmitted from the CLIENT to the SERVER.

This message is used to retrieve the QAM equalizer settings from the AT2000

It only retrieves the Inband equalizer setup and the FFE and DFE equalizer. To get all the settings, use the Get Settings command instead.

Field Name		Value	
Message Type		7	
Message Length		4	
Message			
Offsets	Size	Description	Possible values
0,1	UWORD16	Message's header length	
2	BYTE	Sub-Command	11
3	BYTE	Reserved	0

Possible ACK/NACK returned:

ACK / NACK	CODES
ACK	0

An additional packet is transmitted to the client containing the MESSAGE RESPONSE.

Field Name		Value	
Message Type		7	
Message Length		7	
Message			
Offsets	Size		Possible values
0,1	UWORD16	Message's header length	
2	BYTE	Sub-Command	11
3	BYTE	Reserved	0
4	BYTE	Inband Equalizer setup	• 0 =Off • 1 = Unfreeze • 2 = Freeze • 3 = Special
5	BYTE	FFE Equalizer Length.	• 0=Off • 1=On
6	BYTE	DFE Equalizer Length	• 8 • 16 • 20 • 24

6.4.11.5 Set Normalization File

This command can be transmitted from the CLIENT to the SERVER.

Use to transmit QAM Normalization File for equalizer settings.

It sets the normalization file name to use for TAP compensation. If "none" is set as file name, no normalization will be used.

Field Name		Value	
Message Type		7	
Message Length		36	
Message			
Offsets		Description	Possible values
0,1	UWORD16	Message's header length	
2	BYTE	Sub-Command	12
3	BYTE	Reserved	0
4-35	CHAR [32]	File name to select (NUL terminated)	

Possible ACK/NACK returned:

ACK / NACK	CODES
ACK	0

An additional packet is transmitted to the client containing the MESSAGE RESPONSE.

Field Name		Value	
Message Type		7	
Message Length		4	
Message			
	Size	Description	
0,1	UWORD16	Message's header length	
2	BYTE	Sub- Command	12
3	BYTE	Reserved	0
4	BYTE	Error type	• 0=No error • 1=File missing • 2=File corrupted

6.4.11.6 Get Normalization File

This command can be transmitted from the CLIENT to the SERVER.

Use to retrieve QAM Normalization File name currently sets.
If "none" is return as file name, no normalization file is currently used.

Field Name		Value	
Message Type		7	
Message Length		4	
Message			
Offsets	Size	Description	Possible values
0,1	UWORD16	Message's header length	
2	BYTE	Sub-Command	13
3	BYTE	Reserved	0

Possible ACK/NACK returned:

ACK / NACK	CODES
ACK	0

An additional packet is transmitted to the client containing the MESSAGE RESPONSE.

Field Name		Value	
Message Type		7	
Message Length		36	
Message			
Offsets	Size	Description	Possible values
0,1	UWORD16	Message's header length	
2	BYTE	Sub-Command	13
3	BYTE	Reserved	0
4-35	CHAR [32]	File name currently selected.	"none" if no selected file.

6.4.12 CATV

This section regroups the commands that can be performed while in SM1, SM2, and SM6 mode.

6.4.12.1 BAR

This command can be transmitted from the SERVER to the CLIENT.

This message is used to transmit data of a carrier for the SM1, SM2 and SM6 modes.

Field Name				Value
Message Type				10
Message Length				22 for SM1, 38 for SM2, 118 for SM6
Message				
Offsets		Size	Description	Possible values
0,1		UWORD16	Length of message header	
2		BYTE	Sub-Command	0
3		BYTE	Reserved	0
4,5		UWORD16	Number of Channel	
Channel 1 (6-21)	0	BOOL	Is it a Channel Plan Channel	
	1	BYTE	Reserved	
	2 - 3	UWORD16	Channel number	
	4	BOOL	Active Channel status	
	5	BYTE	Channel type	
	6 – 9	UWORD32	Channel Frequency	See Frequencies
	10 - 13	UWORD32	Measured Frequency	See Frequencies
	14 - 15	SWORD16	Measured Amplitude in tenth of dBmV	
22 – 37		Channel 2	… (SM6 only)	
38 – 53		Channel 3	… (SM6 only)	
54-69		Channel 4	… (SM6 only)	
70 – 85		Channel 5	… (SM6 only)	
86 – 101		Channel 6	… (SM6 only)	

6.4.13 Depth of modulation

This section regroups the commands that can be performed while in DOM mode.

6.4.13.1 Get Current Modulation (DOM)

This command can be transmitted from the CLIENT to the SERVER.

This command is used to retrieve from the server its current modulation type.

Field Name		Value	
Message Type		12	
Message Length		4	
Message			
Offsets	Size	Description	Possible values
0, 1	UWORD16	Packet Length	
2	BYTE	Sub-Command	1
3	BYTE	Reserved	

Possible ACK/NACK returned:

ACK / NACK	CODES
ACK	0

An additional packet is transmitted to the client containing the MESSAGE RESPONSE.

Field Name		Value	
Message Type		12	
Message Length		8	
Message			
Offsets	Size	Description	Possible values
0, 1	UWORD16	Packet Length	
2	BYTE	Sub-Command	1
3	BYTE	Reserved	
4, 5	UWORD16	Ratio	Percentage (0 to 40)
6, 7	UWORD16	Modulation	0 to 999 (tenth i.e. 0.0 ➔99.9)

6.4.14 Carrier to noise

This section regroups the commands that can be performed while in DOM mode.

6.4.14.1 Do Measures (Noise interface)

This command can be transmitted from the CLIENT to the SERVER.

This command is used to request the server to perform CCN/CSO/CTB measures.

Field Name			Value
Message Type			13
Message Length			12
Message			
Offsets	Size	Description	Possible values
0, 1	UWORD16	Packet Length	
2	BYTE	Sub-Command	0x10
3	BYTE	Reserved	0x01
4	BYTE	Command State	• 0 => Execute Part 1 • 1 => User Action • 2 => Do Gated Measure
5	BYTE	Measure To Perform	Bit-field • 0x01 => Do CCN Measure • 0x02 => Do CSO Measure • 0x04 => Do CTB Measure
6	BYTE	CCN Field Number	
7	BYTE	CCN Line Number	
8	BYTE	CSO Field Number	
9	BYTE	CSO Line Number	
10	BYTE	CTB Field Number	
11	BYTE	CTB Line Number	

Possible ACK/NACK returned:

ACK / NACK	CODES
ACK	0

An additional packet is transmitted to the client containing the MESSAGE RESPONSE.

Field Name			Value
Message Type			13
Message Length			78
Message			
Offsets	Size	Description	Possible values
0, 1	UWORD16	Packet Length	
2	BYTE	Sub-Command	0x10
3	BYTE	Reserved	0x01
4	BOOL	Done/Ask flag	
5	BYTE	Reserved	
6, 7	UWORD16	Reserved	
8 - 15	DOUBLE	Carrier Level	

16 – 23	DOUBLE	CTN Ratio	
24 – 31	DOUBLE	CTN Noise Correction	
32, 33	SWORD16	CTN Marker	
34 – 37	SWORD32	CSO Frequency Offset Result	
38 - 45	DOUBLE	CSO Ratio	
46 - 53	DOUBLE	CSO Noise Correction	
54, 55	SWORD16	CSO Marker	
56 – 59	SWORD32	CTB Frequency Offset Result	
60 – 67	DOUBLE	CTB Ratio	
68 – 75	DOUBLE	CTB Noise Correction	
76, 77	SWORD16	CTB Marker	

6.4.15 MOS Score Commands

MOS commands have been introduced by the Atlanta team and do not follow exactly the scheme of sending an acknowledge for each command. This behavior is known and should be corrected in the phase two of their development. MOS mode is also, for now, implemented for specific systems which the not comprising ATxxxx series.

6.4.15.1 MOS Score Commands quick table index

S ➔ Sender, R ➔ Receiver, X ➔ Sender and Receiver

Type	Command	PC	HM	HEC	Page	Message Type	Description
15	**MOS**						
	0	R	S		123	PORT_REQUEST	Request the RTP Listener Port
	1	S	R		123	PORT_REPLY	Supply the RTP Listener Port
	2	R	S		124	START_STREAM	Start an RTP stream to the meter
	3	R	S		125	STOP_STREAM	Stop an RTP stream to the meter
	4	S	R		125	STOP_REPLY	Return the packet count
	5	R	S		126	MOS_DATA_REQUEST	Request MOS data
	6	S	R		126	MOS_DATA_REPLY	Send MOS data
	7	R	S		127	MOS_COUNT_REQUEST	Request an RTP packet count
	8	S	R		127	MOS_ COUNT _REPLY	Return the RTP packet count

6.4.15.2 Request MOS Port

This command can be transmitted from the CLIENT to the SERVER.

The purpose of this command is to request the UDP port of the RTP listener in the RealMos Server.

Field Name		Value	
Message Type		15 (MOS Score)	
Message Length		2	
Message			
Offsets	Size	Description	Possible values
0	BYTE	Version	
1	BYTE	Sub-Command	0 (PORT_REQUEST)

Possible ACK/NACK returned: none

An additional packet is transmitted to the client containing the MESSAGE RESPONSE.

Field Name		Value	
Message Type		15	
Message Length		10	
Message			
Offsets	Size	Description	Possible values
0		Version	
1	BYTE	Sub-Command	1 (PORT_REPLY)
2-3	UWORD16	Listening UDP Port	
4	BYTE	Codec	• 0 => G.711u • 1 => G.723.1 • 2 => G.729 • 3 => G.726
5	BYTE	RTP interval	10, 20, 30 (milliseconds)
6-9	UWORD32	[Reserved]	

6.4.15.3 Start Stream

This command can be transmitted from the CLIENT to the SERVER.

The purpose of this command is to start an RTP stream from the RealMos Server to the CM-IP.

Field Name			Value
Message Type			15 (MOS Score)
Message Length			10
Message			
Offsets	Size	Description	Possible values
0	BYTE	Version	
1	BYTE	Sub-Command	2 (START_STREAM)
2-3	UWORD16	Listening Port on CM	
4	BYTE	[Reserved]	
5	BYTE	[Reserved]	
6-9	UWORD32	RTP Packets to send	(0 means indefinite)

Possible ACK/NACK returned: none

No additional packet is transmitted to the client.

6.4.15.4 Stop Stream Request

This command can be transmitted from the CLIENT to the SERVER.

The purpose of this command is to stop the stream of RTP packets coming from the RealMos Server.

Field Name		Value	
Message Type		15 (MOS Score)	
Message Length		6	
Message			
Offsets	Size	Description	
0	BYTE	Version	
1	BYTE	Sub-Command	3 (STOP_STREAM)
2-5	UWORD32	Time to Wait for finish	(in milliseconds, 0 for no wait)

Possible ACK/NACK returned: none

An additional packet is transmitted to the client containing the MESSAGE RESPONSE.

Field Name		Value	
Message Type		15	
Message Length		6	
Message			
Offsets	Size	Description	Possible values
0		Version	
1	BYTE	Sub-Command	4 (STOP_REPLY)
2-5	UWORD32	Packets Sent	

6.4.15.5 MOS Data Request

This command can be transmitted from the CLIENT to the SERVER.

The purpose of this command is to request the MOS Data (timestamps) from the RealMos Server.

Field Name		Value	
Message Type		15 (MOS Score)	
Message Length		2	
Message			
Offsets		Description	Possible values
0	BYTE	Version	
1	BYTE	Sub-Command	5 (MOS_DATA_REQUEST)

Possible ACK/NACK returned: none

Additional packets are transmitted to the client containing the MESSAGE RESPONSE.
Packets transmitted until all MOS Data is sent.
If there is no MOS Data, one packet is sent with number of sets equal to zero.
The More field tells the client that there are more packets after the current one.
More will be set to False in the last MOS Data packet sent.

Field Name		Value	
Message Type		15	
Message Length		Variable (6 + 10 *Number of Sets)	
Message			
Offsets	Size		Possible values
0		Version	
1	BYTE	Sub-Command	6 (MOS_DATA_REPLY)
2	UWORD32	More (data remaining)	True (1) or False (0)
3-4	UWORD16	Number of Sets	
5	Set 1		(each Set is 10 bytes long)
Set 1: 0-3	UWORD32	Sender Timestamp	
Set 1: 4-7	UWORD32	Receiver Timestamp	
Set 1: 9-10	UWORD16	Sequence Number	
…	…	…	Set n starts at Offset (n-1)*10 + 5
Set n:	UWORD32	Sender Timestamp	
Set n:	UWORD32	Receiver Timestamp	
Set n:	UWORD16	Sequence Number	

6.4.15.6 Count Request

This command can be transmitted from the CLIENT to the SERVER.

The purpose of this command is to request the count of RTP packets sent by the RealMos Server.

Field Name		Value	
Message Type		15 (MOS Score)	
Message Length		6	
Message			
Offsets	Size	Description	Possible values
0	BYTE	Version	
1	BYTE	Sub-Command	7 (COUNT_REQUEST)
2-5	UWORD32	Time to Wait for finish	(in milliseconds, 0 for no wait)

Possible ACK/NACK returned: none

An additional packet is transmitted to the client containing the MESSAGE RESPONSE.

Field Name		Value	
Message Type		15	
Message Length		6	
Message			
Offsets	Size	Description	
0		Version	
1	BYTE	Sub-Command	8 (COUNT_REPLY)
2-5	UWORD32	Packets Sent	

6.5 Monitoring

6.5.1 Common Commands quick table index

S ➔ Sender, R ➔ Receiver, X ➔ Sender and Receiver

Type	Command	PC	HM	HEC	Page	Message Type	Decription
	Monitoring						
	1	S	R		130	START	Starts a monitoring session of the currently selected mode.
	1	S	R		131	START (FUTURE)	
	2	S	R		132	STOP	Stops the currently running monitoring session.
	3	S	R		133	PAUSE	Pauses the currently running monitoring session.
	4	S	R		134		Poll the HM
	5		R		135		
	6	S	R		136		
	7	S	R		137	POLL STATUS	Poll the current monitoring status.
	8	S	R		138	DELETE ALARMS	Deletes all alarms.
	9	S	R		139	DELETE STATS	Deletes all statistics.
	10	S	R		140	DELETE INTGS	Deletes all integrals.
	11	S	R		141	NEXT ALARM	Requests the transmission of the next stocked alarm.
	12	S	R		142	NEXT STAT	Requests the transmission of the next stocked statistic.
	13	S	R		143	NEXT INTG	Requests the transmission of the next stocked integral.
	14	S	R		144	RESET ERROR	Clears the current monitoring error status.
	15	S	R		146		Retrieves from the SERVER its serial number.
	16	S	R		147	SELECT REQUESTED	Requests the server to send a node live trace.
	16	S	R		148	SEND REQUESTED	Live trace of a requested node.
	17	S	R		149	SET WORKING_MODE	Sets the working monitoring mode
	18	S	R		150	GET SOURCE SEQUENCE	Retrieves the monitoring signal sources.
	19	S	R		151	GET SOURCE SETTINGS	Retrieves the settings of the specified source.
	20	S	R		153	SET THROTTLING VALUE	Sets the percentage of CPU given to the monitoring.
	21	S	R		154		Retrieves the threshold information on a given signal source.
	22	S	R		155	Next Alarm32	Requests the transmission of the next stocked alarm.
	40 (“(“)	S	R		156	ERROR MONITORING	Error while monitoring.
	41 (“)“)		R		157		Alarm Content.
	42 (“*“)	S			158		Alarm Content.
	43 (“+“)		R		159		Statistic Content.
	44 (“,“)	S	R		160		Integral Content.
	45 (“-“)	S	R		161	STATUS	Current monitoring status.
	46 (“.”)	S	R		162	ALARM WITHOUT IMAGE (new format)	Alarm Content.
	47 (“/”)	S	R		163	ALARM WITH IMAGE (new format)	Alarm Content.
	48 (“0”)	S	R		164	STATISTIC (new format)	Statistic Content.
	49 (“1”)	S	R		165	ALARM WITH IMAGE (multimode)	Alarm Content.

The complete Command index can be found at Appendix D

6.5.2 Normal Monitoring flow

To do a monitoring session, you must first upload the Signals Sources, Reference Traces and Schedule files to the AT2x00. The AT2x00 should already have the Switch Network file. When the upload of those files is done, you simply have to start a monitoring session and get the results. This is briefly how you can do that:

This schematic shows all necessary steps to do a monitoring session.

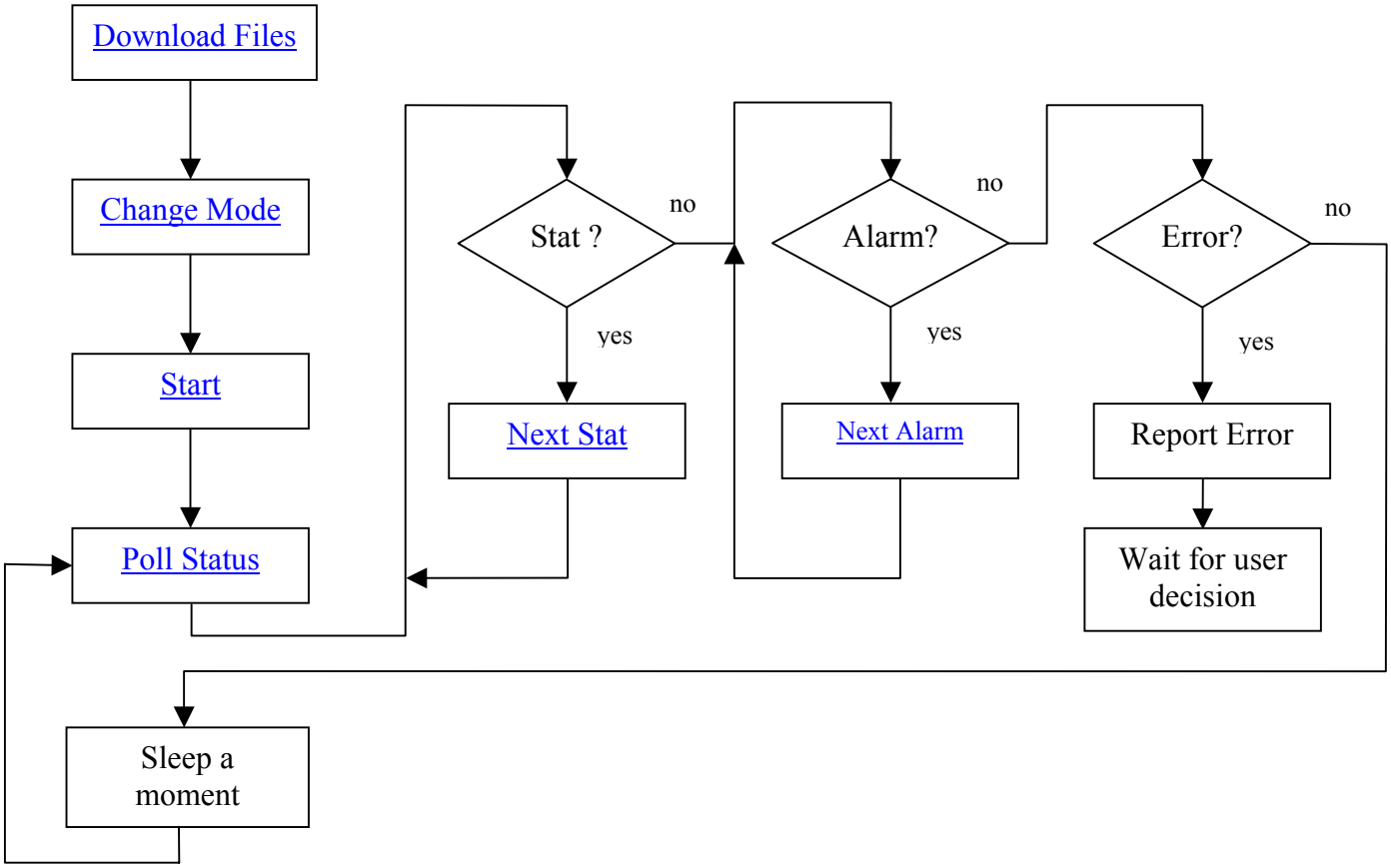

After it receives the Start Monitoring command,

the AT2x00 goes in an infinite loop. This loop will be interrupted only when there is a severe error or an operator intervention. The AT2x00 does all the signal tests continually. When the client computer send a Poll Status command, the AT2x00 returns a short answer describing the current status of monitoring session. If some statistics and/or alarms have been detected, the client can download those Next Statistics or Next Alarms by sending the appropriate command. When the AT2x00 receives the first "Next ..." command, the signal tests are stopped until the last statistic or alarm is downloaded. After that last download, the tests are restarted automatically. If for any reason, all statistics and alarms are not downloaded and there is no activity from the client computer for 2 minutes, all statistics and alarms that have not been downloaded are saved and the tests are automatically restarted.

If the client wants to stop the monitoring session, it can transmit a Stop Monitoring or New Mode command. However, we recommend to use Stop Monitoring command first and a last Poll Status, Next Alarms / Next Statistics loop to be sure to download all statistics and alarms linked to that session.

6.5.3 Start Monitoring

This command can be transmitted from the CLIENT to the SERVER.

The NETWORK MANAGER (PC) must transmit this Command when we want to start a monitoring session.

Field Name			Value
Message Type			90
Message Length			1
Message			
Offsets	Size	Description	Possible values
0	BYTE	Sub-Command	1

Possible ACK/NACK returned:

ACK / NACK	CODES
ACK	0
NACK	8

6.5.4 Start Monitoring (future)

This command can be transmitted from the CLIENT to the SERVER.

The CLIENT must transmit this Command when we want to start a monitoring session.

This version is only a **proposal** to implement minimal task scheduling abilities in the AT2000.

Field Name			Value
Message Type			90
Message Length			12
Message			
Offsets	Size		Possible values
0	BYTE	Sub-Command	1
1	BYTE	Reserved	
2	BYTE	Version of the Start Monitoring command	2
3	BYTE	Execution Flag	• 0 – forever • 1 –finite number of Steps • 2 – finite Number of Loops
4-7	SWORD32	Number of Steps or number of loops to execute	
8-11	SWORD32	First step to execute (0 based)	

Possible ACK/NACK returned:

ACK / NACK	CODES
ACK	0
NACK	8

Preliminary

6.5.5 Stop Monitoring

This command can be transmitted from the CLIENT to the SERVER.

The CLIENT must transmit this Command when we want stop monitoring.

Field Name		Value	
Message Type		90	
Message Length		1	
Message			
Offsets		Description	Possible values
0	BYTE	Sub-Command	2

Possible ACK/NACK returned:

ACK / NACK	CODES
ACK	0
NACK	8

6.5.6 Pause Monitoring

This command can be transmitted from the CLIENT to the SERVER.

This Command must be transmitted by the NETWORK MANAGER (PC) when we want to pause monitoring session.

** When this Command followed by the START Command, the monitoring sequence is started from the node we were before that command.

Field Name			Value
Message Type			90
Message Length			1
Message			
Offsets	Size		Possible values
0	BYTE	Sub-Command	3

Possible ACK/NACK returned:

ACK / NACK	CODES
ACK	0
NACK	8

6.5.7 Ping

This command can be transmitted from the CLIENT to the SERVER.

The CLIENT can transmit this Command when we want to check the HM communication.

Field Name			Value
Message Type			90
Message Length			1
Message			
Offsets	Size	Description	Possible values
0	BYTE	Sub-Command	4

Possible ACK/NACK returned:

ACK / NACK	CODES
ACK	0

Obsolete

6.5.8 Download Database

This command can be transmitted from the CLIENT to the SERVER.

This Command is use to initiate the database transfer to SERVER.
*** It is not necessary to use "STOP Monitoring" command before.

Field Name			Value
Message Type			90
Message Length			1
Message			
Offsets	Size	Description	Possible values
0	BYTE	Sub-Command	5

Possible ACK/NACK returned:

ACK / NACK	CODES
ACK	0
NACK	7

Obsolete

6.5.9 Upload Database

This command can be transmitted from the CLIENT to the SERVER.

This command is used to initiate transfer of HM's Data Bases to the NETWORK MANAGER.
*** It is not necessary to use "STOP Monitoring" command before.

Field Name			Value
Message Type			90
Message Length			1
Message			
	Size	Description	Possible values
0	BYTE	Sub- Command	6

Possible ACK/NACK returned:

ACK / NACK	CODES
ACK	0
NACK	7

Obsolete

6.5.10 Poll Status

This command can be transmitted from the CLIENT to the SERVER.

This Command is used to know the monitoring status. The HM will answer to this command by a STATUS message described forward in that document.

Field Name			Value
Message Type			90
Message Length			1
Message			
	Size	Description	Possible values
0	BYTE	Sub-Command	7

Possible ACK/NACK returned:

ACK / NACK	CODES
ACK	0

6.5.11 Delete Alarms

This command can be transmitted from the CLIENT to the SERVER.

This Command is used to clear the alarm file on the HM.

Field Name			Value
Message Type			90
Message Length			1
Message			
Offsets	Size	Description	Possible values
0	BYTE	Sub-Command	8

Possible ACK/NACK returned:

ACK / NACK	CODES
ACK	0

6.5.12 Delete Statistics

This command can be transmitted from the CLIENT to the SERVER.

This Command is used to clear the statistics file on the HM.

Field Name			Value
Message Type			90
Message Length			1
Message			
Offsets	Size	Description	
0	BYTE	Sub-Command	9

Possible ACK/NACK returned:

ACK / NACK	CODES
ACK	0

6.5.13 Delete Integrals

This command can be transmitted from the CLIENT to the SERVER.

This Command is used to clear the integrals file on the HM

Field Name		Value	
Message Type		90	
Message Length		1	
Message			
Offsets		Description	Possible values
0	BYTE	Sub-Command	10

Possible ACK/NACK returned:

ACK / NACK	CODES
ACK	0

6.5.14 Next Alarm

This command can be transmitted from the CLIENT to the SERVER.

When the SERVER receives this command for the first time, it pauses the monitoring, opens the alarm file and sends the first alarm of that file. It then waits for an other NEXT ALARM command to send the next alarm of the file. If all alarms are sent, the monitoring is restarted. All sent alarms are erased from the alarm file. If an other command is received before the HM sends the last alarm of the file, all remaining alarms are saved in the file. The file is then closed, and the command is executed.

Field Name			Value
Message Type			90
Message Length			1
Message			
Offsets	Size	Description	Possible values
0	BYTE	Sub-Command	11
1	BOOL	Get Next	

Possible ACK/NACK returned:

ACK / NACK	CODES
ACK	0

6.5.15 Next Statistic

This command can be transmitted from the CLIENT to the SERVER.

When the HM receives this command for the first time, it pauses the monitoring, open the statistics file and sends the first statistic of that file. It then waits for another NEXT STAT command to send the next statistic of the file. If all statistics are sent, the monitoring is restarted. All sent statistics are erased from the file. If another command is received before the HM sends the statistic of the file, all remaining statistics are saved. The file is then closed and the command is executed.

Field Name			Value
Message Type			90
Message Length			1
Message			
Offsets	Size	Description	Possible values
0	BYTE	Sub-Command	12
1	BOOL	Get Next	

Possible ACK/NACK returned:

ACK / NACK	CODES
ACK	0

6.5.16 Next Integral

This command can be transmitted from the CLIENT to the SERVER.

When the HM receives this command for the first time, it pauses the monitoring, open the integral file and sends the first integral of that file. It then waits for another NEXT INTG command to send the next integral of the file. If all integral are sent, the monitoring is restarted. All sent integrals are erased from the integral file. If another command is received before the HM sends the last integral of the file, all remaining integrals are saved in the file. The file is then closed, and the command is executed.

Field Name			Value
Message Type			90
Message Length			1
Message			
Offsets	Size		Possible values
0	BYTE	Sub-Command	13
1	BOOL	Get Next	

Possible ACK/NACK returned:

ACK / NACK	CODES
ACK	0

6.5.17 Reset Error

This command can be transmitted from the CLIENT to the SERVER.

This Command is used to erase monitoring error status on the HM.

Field Name			Value
Message Type			90
Message Length			1
Message			
Offsets	Size		Possible values
0	BYTE	Sub-Command	14

Possible ACK/NACK returned:

ACK / NACK	CODES
ACK	0

6.5.18 Get Serial

This command can be transmitted from the CLIENT to the SERVER.

This Command is used to obtain the serial number attached to the actual monitoring schedule on HM.

Field Name			Value
Message Type			90
Message Length			1
Message			
Offsets	Size	Description	Possible values
0	BYTE	Sub-Command	15

Possible ACK/NACK returned:

ACK / NACK	CODES
ACK	0

An additional packet is transmitted to the client containing the MESSAGE RESPONSE.

Field Name			Value
Message Type			90
Message Length			10
Message			
Offsets	Size	Description	Possible values
0	BYTE	Sub-Command	15
1	BYTE	Reserved for future use	
2 – 5	UWORD32	System serial number	
6 – 9	UWORD32	Monitoring schedule file version number	

Obsolete

6.5.19 Get Serial (new format in Monitoring 1.08)

This command can be transmitted from the CLIENT to the SERVER.

This Command is used to obtain the serial number attached to the actual monitoring schedule on HM.

Field Name			Value
Message Type			90
Message Length			1
Message			
Offsets	Size	Description	Possible values
0	BYTE	Sub-Command	15

Possible ACK/NACK returned:

ACK / NACK	CODES
ACK	0

An additional packet is transmitted to the client containing the MESSAGE RESPONSE.

Field Name			Value
Message Type			90
Message Length			14
Message			
Offsets	Size	Description	Possible values
0	BYTE	Sub-Command	15
1	BYTE	Reserved for future use	
2 – 5	UWORD32	Test plan serial number	
6 – 9	UWORD32	Monitoring Test plan file version number	
10-13	UWORD32	System Serial Number	

6.5.20 Select Requested

This command can be transmitted from the CLIENT to the SERVER. This command is HEC intended.

This Command is used to set or reset a source on the Requested List. This message has the same command number as Send Requested. In fact it can be viewed as a sort of Trigger command. Every time the monitoring mode will process one of the selected nodes in the Requested List, it will send the trace read to the HEC.

Field Name			Value
Message Type			90
Message Length			4
Message			
Offsets	Size	Description	Possible values
0	BYTE	Sub-Command	16
1	BOOL	Requested Status	• 1 => ON • 0 => OFF
2,3	UWORD16	Source Number	

Possible ACK/NACK returned:

ACK / NACK	CODES
ACK	0

6.5.21 Send Requested

This command can be transmitted from the SERVER to the CLIENT. This command is HEC intended.

This message contains a trace image set on the Requested List. This message has the same command number as Select Requested. It is the trace that the monitoring mode just processed. This node is in the Requested List.

Field Name		Value	
Message Type		90	
Message Length		639	
Message			
Offsets	Size	Description	Possible values
0	BYTE	SEND REQUESTED Command	16
1	BYTE	Reserved for future use	
2,3	UWORD16	Send Requested message version	
4,5	UWORD16	Schedule step number	(0 to N)
6,7	UWORD16	Signal source number	(0 to N)
8,9	UWORD16	Reference trace number	(0 to N)
10,11	UWORD16	RPTP number	(1 to 256)
12	BYTE	Reserved for future use	0xFE
13 - 638	BYTE [625]	Trace image	

Possible ACK/NACK returned:

ACK / NACK	CODES
ACK	0

6.5.22 Set Working Mode

This command can be transmitted from the CLIENT to the SERVER.

This Command is used to select the monitoring working mode.

Field Name			Value
Message Type			90
Message Length			2
Message			
Offsets	Size	Description	Possible values
0	BYTE	Sub- Command	17
1	BOOL	Monitoring working status	• TRUE = Streaming Mode • FALSE = Polling Mode

Possible ACK/NACK returned:

ACK / NACK	CODES
ACK	0

6.5.23 Get Source Sequence

This command can be transmitted from the SERVER to the CLIENT. This command is HEC intended.

This command is used to obtain a list of signal sources present in the actual monitoring schedule.

Field Name		Value	
Message Type		90	
Message Length		2	
Message			
Offsets	Size	Description	Possible values
0	BYTE	Sub-Command	18
1	BYTE	Reserved for future use	

Possible ACK/NACK returned:

ACK / NACK	CODES
ACK	0

An additional packet is transmitted to the client containing the MESSAGE RESPONSE.

Field Name		Value	
Message Type		90	
Message Length		Variable	
Message			
	Size	Description	Possible values
0	BYTE	Sub-Command	18
1	BYTE	Reserved for future use	
2,3	UWORD16	Number of node in the list	0xFFFF if error
4,5	UWORD16	Number of the first source	
•	•	•	•
N, N+1	UWORD16	Number of the last source	

6.5.24 Get Source Settings

This command can be transmitted from the CLIENT to the SERVER.

This message contains a trace image settings on the Requested List.

Field Name		Value	
Message Type		90	
Message Length		4	
Message			
Offsets	Size	Description	Possible values
0	BYTE	Sub-Command	19
1	BYTE	Reserved for future use	
2,3	UWORD16	Number of the signal source for which we want settings	

Possible ACK/NACK returned:

ACK / NACK	CODES
ACK	0

An additional packet is transmitted to the client containing the MESSAGE RESPONSE.

Field Name		Value	
Message Type		90	
Message Length		96	
Message			
Offsets	Size	Description	Possible values
0	BYTE	Sub-Command	19
1	BYTE	Reserved for future use	
2,3	UWORD16	Number of the signal source	
4	BYTE	Reserved for future use	0
5	BYTE	Mode de monitoring actuel	
6	BYTE	Reserved for future use	0
7	BYTE	Reserved for future use	0
8,9	SWORD16	External temperature	Temperature in ºC
10,11	UWORD16	Attenuator value	
12,13	SWORD16	IF	See Frequencies
14-21	DOUBLE	Central Frequency in hertz	See Frequencies
22-29	DOUBLE	Span Value	See Span
30,31	UWORD16	Zero Span Value	
32,33	UWORD16	Video channel if selected	
34,35	UWORD16	Audio channel if selected	
36,37	UWORD16	Sweep Time	See Sweep Times
38-45	DOUBLE	Horizontal time	See Horizontal Times
46-53	DOUBLE	Resolution bandwidth	See Resolution Bandwidth
54-61	DOUBLE	Video bandwidth	See Video Bandwidth
62,63	UWORD16	Reserved	
64	BYTE	Average Type	See Average Types
65	BOOL	Is V2 a noise marker	
66	BYTE	FM horizontal Marker	
67	BOOL	Reserved	
68,69	UWORD16	Vertical scale	

70	BYTE	Audio Volume	
71	BYTE	Trigger type	See Trigger Types
72	BOOL	Vertical marker 1 displayed	
73	BOOL	Vertical marker 2 displayed	
74	BOOL	Horizontal marker 1 displayed	
75	BOOL	Horizontal marker 2 displayed	
76-83	DOUBLE	Vertical marker 1 Position	
84-91	DOUBLE	Vertical marker 2 Position	
92,93	UWORD16	Horizontal marker 1 Position	
94,95	UWORD16	Horizontal marker 2 Position	

6.5.25 Set Throttling Values

This command can be transmitted from the CLIENT to the SERVER. This command is HEC intended.

This Command is used to set the values arbitrating the throttling between monitoring and non-monitoring activities, which includes the minimum CPU usage for Monitoring and the maximum frame rate for live traces during monitoring.

Field Name			Value
Message Type			90
Message Length			4
Message			
Offsets	Size	Description	Possible values
0	BYTE	Sub-Command	20
1	BYTE	Reserved for future use	
2	BYTE	Minimum CPU usage to give to Monitoring, in percent	
3	BYTE	Maximum frame rate for live traces.	

Possible ACK/NACK returned:

ACK / NACK	CODES
ACK	0

6.5.26 Get Alarm Threshold

This command can be transmitted from the CLIENT to the SERVER.

This command is used to retrieve from the SERVER the threshold information about the specified signal source.

Field Name			Value
Message Type			90
Message Length			4
Message			
Offsets	Size	Description	Possible values
0	BYTE	Sub-Command	21
1	BYTE	Reserved for future use	
2,3	UWORD16	Number of the signal source for which we want the Threshold	

Possible ACK/NACK returned:

ACK / NACK	CODES
ACK	0

An additional packet is transmitted to the client containing the MESSAGE RESPONSE.

Field Name			Value
Message Type			90
Message Length			646
Offsets	Size	Description	Possible values
0	BYTE	Sub-Command	21
1	BYTE	Successful command ?	• 0 ➔ Success • 0xFF ➔ Failure
2,3	UWORD16	Number of the signal source	
4	BYTE	Reserved for future use	
5	BYTE	Number of alarm threshold	
Th. 1 6,7	SWORD16	Threshold of first alarm	
Th. 1 8	BYTE	Compare type	• 0 – not active • 1 – link loss • 2 – overshoot
Th. 2 9,11		Threshold # 2	
Th. 3 12,14		Threshold # 3	
Th. 4 15,17		Threshold # 4	
Th. 5 18,20		Threshold # 5	
•	•	•	•
21 – 646	BYTE [625]	Trace image	

Preliminary

6.5.27 Next Alarm32

This command can be transmitted from the CLIENT to the SERVER.

When the HM receives this command for the first time, it pauses the monitoring, open the alarm file and sends the first alarm of that file and waits for another NEXT ALARM32 command to send the next alarm of the file. If all alarms are sent, the monitoring is restarted. All sent alarms are erased from the alarm file. If another command is received before the HM sends the last alarm of the file, all remaining alarms are saved. The file is closed and the command is executed.

This command requests alarms according to the new alarm format.

Field Name			Value
Message Type			90
Message Length			1
Message			
Offsets	Size	Description	Possible values
0	BYTE	Sub-Command	22

Possible ACK/NACK returned:

ACK / NACK	CODES
ACK	0

6.5.28 Error Monitoring

This command can be transmitted from the SERVER to the CLIENT.

This message is send by the HM when there is a system error.

Field Name			Value
Message Type			90
Message Length			2
Message			
Offsets	Size	Description	Possible values
0	BYTE	Monitoring error message code	40 (“(“)
1	BYTE	Error number	• 1 = FILE_NOT_FOUND • 2 = FILE_NOT_VALID • 3 = DISK_FULL

Possible ACK/NACK returned:

ACK / NACK	CODES
ACK	0

6.5.29 Alarm Monitoring Without Image

This command can be transmitted from the SERVER to the CLIENT.

This message is the answer of the NEXT ALARM Command and is used to transmit an alarm data without image.

Field Name			Value
Message Type			90
Message Length			11
Message			
Offsets	Size	Description	Possible values
0	BYTE	Alarm without image Message code	41 (“}“)
1,2	UWORD16	Number of not transferred alarm	
3,4	UWORD16	Number of signal source linked to that alarm	
5	BYTE	Event Hour	0 – 23
6	BYTE	Event Minute	0 – 59
7	BYTE	Event Second	0 – 59
8	BYTE	Alarm level	• 1.n • 0xff => Restore • 0xfe nothing to transmit
9	BYTE	Alarm deviation (integer part)	
10	BYTE	Alarm deviation (fractional part)	

Possible ACK/NACK returned:

ACK / NACK	CODES
ACK	0

Obsolete

6.5.30 Alarm Monitoring With Image

This command can be transmitted from the SERVER to the CLIENT.

This message is the answer of the NEXT ALARM Command and is used to transmit an alarm data with image.

Field Name			Value
Message Type			90
Message Length			636
Message			
Offsets	Size	Description	Possible values
0	BYTE	Alarm without image Message code	42 (“*“)
1,2	UWORD16	Number of not transferred alarm	
3,4	UWORD16	Number of signal source linked to that alarm	
5	BYTE	Event Hour	0 – 23
6	BYTE	Event Minute	0 – 59
7	BYTE	Event Second	0 – 59
8	BYTE	Alarm level	• 1.n • 0xff => Restore • 0xfe nothing to transmit
9	BYTE	Alarm deviation (integer part)	
10	BYTE	Alarm deviation (fractional part)	
11-635	BYTE [N]	Alarm trace in aligned format	See Realignment Algorithm

Possible ACK/NACK returned:

ACK / NACK	CODES
ACK	0

Obsolete

6.5.31 Statistic

This command can be transmitted from the SERVER to the CLIENT.

This message is the answer of the NEXT STATISTIC Command and is used to transmit a statistic trace.

Field Name			Value
Message Type			90
Message Length			633
Message			
Offsets	Size	Description	Possible values
0	BYTE	Statistic Message code	43 ("+")
1,2	UWORD16	Number of not transmitted statistic	
3,4	UWORD16	Number of signal source linked to that statistic	
5	BYTE	Reserved	
6	BYTE	Statistic Hour	0 – 23
7	BYTE	Statistic Minute	0 – 59
8-632	BYTE	Statistic trace in aligned format	

Possible ACK/NACK returned:

ACK / NACK	CODES
ACK	0

Obsolete

6.5.32 Integral

This command can be transmitted from the SERVER to the CLIENT.

This message is the answer of the NEXT INTG Command and is used to transmit an integral data.

Field Name			Value
Message Type			90
Message Length			10
Message			
Offsets	Size		Possible values
0	BYTE	Integral Message code	44 (“,“)
1,2	UWORD16	Number of not transmitted integral	
3,4	UWORD16	Number of signal source	
5	BYTE	Reserved	
6	BYTE	Integral Hour	0 – 23
7	BYTE	Integral Minute	0 – 59
8,9	UWORD16	Integral value	

Possible ACK/NACK returned:

ACK / NACK	CODES
ACK	0

Obsolete

6.5.33 Status

This command can be transmitted from the SERVER to the CLIENT.

This Message is transmitted by the HM to answer to POLL STATUS Command.

Field Name		Value	
Message Type		90	
Message Length		9	
Message			
Offsets	Size	Description	Possible values
0	BYTE	Monitoring status message code	45 (“-“)
1,2	UWORD16	Number of alarm that are left in alarm file	
3,4	UWORD16	Number of statistic that are left in statistic file	
5,6	UWORD16	Number of integral that are left in integral file	
7	BYTE	Monitoring status	• R=running • S=stop • P=pause • E=error
8	BYTE	Error number	

Possible ACK/NACK returned:

ACK / NACK	CODES
ACK	0

6.5.34 Alarm Monitoring Without Image (new format)

This command can be transmitted from the SERVER to the CLIENT.

This message is the answer of the NEXT ALARM Command and is used to transmit an alarm data without image.

Field Name			Value
Message Type			90
Message Length			32
Message			
Offsets	Size	Description	Possible values
0	BYTE	Alarm without image Message code	46 (“.”)
1 – 4	UWORD32	Serial number of actual schedule	
5,6	UWORD16	Step number	
7	BYTE	Monitoring mode number	
8	BOOL	Calibration status	
9,10	UWORD16	Event Year minus 1900	
11	BYTE	Event Month	1 – 12
12	BYTE	Event Day	1 – 31
13	BYTE	Event Hour	0 – 23
14	BYTE	Event Minute	0 – 59
15	BYTE	Event Second	0 – 59
16	BYTE	Hundredths of seconds	
17	BYTE	Alarm level	• 1..n • 0xff = restore • 0xfe nothing to transmit
18,19	UWORD16	Alarm deviation in 0.01%	
20,21	SWORD16	Event external temperature	
22,23	UWORD16	Number of not transferred alarms	
24 – 31	BYTE [8]	Reserved for future use	

Possible ACK/NACK returned:

ACK / NACK	CODES
ACK	0

6.5.35 Alarm Monitoring With Image (new format)

This command can be transmitted from the SERVER to the CLIENT.

This message is the answer of the NEXT ALARM Command and is used to transmit an alarm data with image.

Field Name			Value
Message Type			90
Message Length			657
Message			
Offsets	Size	Description	Possible values
0	BYTE	Alarm without image Message code	47 ("/")
1 – 4	UWORD32	Serial number of actual schedule	
5,6	UWORD16	Step number	
7	BYTE	Monitoring mode number	
8	BOOL	Calibration status	
9,10	UWORD16	Event Year minus 1900	
11	BYTE	Event Month	1 – 12
12	BYTE	Event Day	1 – 31
13	BYTE	Event Hour	0 – 23
14	BYTE	Event Minute	0 – 59
15	BYTE	Event Second	0 – 59
16	BYTE	Hundredths of seconds	
17	BYTE	Alarm level	• 1..n • 0xff = restore • 0xfe nothing to transmit
18,19	UWORD16	Alarm deviation in 0.01%	
20,21	SWORD16	Event external temperature	
22,23	UWORD16	Number of not transferred alarms	
24 - 31	BYTE [8]	Reserved for future use	
32-656	BYTE [N]	Alarm trace in aligned format	See Realignment Algorithm

Possible ACK/NACK returned:

ACK / NACK	CODES
ACK	0

6.5.36 Statistic (new format)

This command can be transmitted from the SERVER to the CLIENT.

This message is the answer of the NEXT STATISTIC Command and is used to transmit a statistic trace.

Field Name			Value
Message Type			90
Message Length			657
Message			
Offsets	Size	Description	Possible values
0	BYTE	Statistic Message code	48 (“0”)
1 – 4	UWORD32	Serial number of actual schedule	
5,6	UWORD16	Step number	
7	BYTE	Monitoring mode number	
8	BOOL	Calibration status	
9,10	UWORD16	Event Year minus 1900	
11	BYTE	Event Month (1 – 12)	1 – 12
12	BYTE	Event Day (1 – 31)	1 – 31
13	BYTE	Event Hour (0 – 23)	0 – 23
14	BYTE	Event Minute (0 – 59)	0 – 59
15	BYTE	Event Second (0 – 59)	0 – 59
16	BYTE	Hundredths of seconds	
17 – 19	BYTE [3]	Reserved for future use	
20,21	SWORD16	Event external temperature	• 1..n • 0xff = restore • 0xfe = nothing to transmit
22,23	UWORD16	Number of not transferred statistics	
24 - 31	BYTE [8]	Reserved for future use	
32-656	BYTE	statistic trace in aligned format	

Possible ACK/NACK returned:

ACK / NACK	CODES
ACK	0

6.5.37 Alarm Monitoring With Image (Multimode 32bit format)

This command can be transmitted from the SERVER to the CLIENT.

This message is the answer of the NEXT ALARM32 Command and is used to transmit an alarm data with image.

Field Name		Value	
Message Type		90	
Message Length		Variable	
Message			
Offsets	Size		Possible values
0	BYTE	Alarm with image Message code	49 (“1”)
1 – 4	UWORD32	Serial number of actual schedule (test plan)	
5-8	UWORD32	Version number of the actual schedule (test plan)	
9-10	UWORD16	Step number	
11	BYTE	Monitoring mode number	
12	BOOL	Calibration status	
13-14	UWORD16	Event Year minus 1900	
15	BYTE	Event Month	1 – 12
16	BYTE	Event Day	1 – 31
17	BYTE	Event Hour	0 – 23
18	BYTE	Event Minute	0 – 59
19	BYTE	Event Second	0 – 59
20	BYTE	Hundredths of seconds	
21	BYTE	Alarm level	Bit 8 is inversed if the type of alarm is trouble. • 1..n • 0xff = restore • 0xfe = nothing to transmit
22,23	SWORD16	Event external temperature	
24,25	UWORD16	Number of not transferred alarms	
26-29	UWORD32	Serial Number of the Signal Source	
30-33	UWORD32	Version number of the signal source (test plan)	
34-37	UWORD32	Serial Number of the Profile (not used in Ingress Monitoring)	
38-41	UWORD32	Version number of the profile (not used in Ingress Monitoring)	
42-57	BYTE [16]	Reserved Bytes	
58-???	Varies	Result of the alarm. (See below)	

Ingress Monitoring Results			
Offsets	Size	Description	Possible values
58-682	BYTE [625]	Alarm trace in aligned format	See Realignment Algorithm

Performance Monitoring Results				
Offsets		Size	Description	Possible values
58-59		UWORD16	Number of Tests	
Test 1	0-1	WORD	Test Number	
	2	BYTE	Alarm Level for Test	
	3-6	UWORD32	Value in Integer	
Test 2			Test 2 structure	
•	•	•	•	•
Test N			Test N structure	

Possible ACK/NACK returned:

ACK / NACK	CODES
ACK	0

6.6 HEC

HEC stands for Head-End Controller**.** At a certain time, its name was later changed for RealView Controller.

6.6.1 How to interact with the HEC

The HEC here can be viewed as a middle-ware. It is a client to thee AT2x00 and a server for tools such as WinRemote. Some of the commands sent by its clients to it will be relayed to the AT2x00. By the same way traces sent from the AT2x00 will be dispatched to the appropriate HEC client.

The way to obtain traces form an HEC is very simple. You simply have to follow a sequence of commands to initiate the HEC and after that, wait for traces. Here is the standard procedure:

1. You **have** to send a LOGON command to connect to the HEC. Just after the ACK answer from the HEC, you are logged on.
2. You **can** send the Get Server Info message to verify if you are talking to a HEC or an AT2000. The HEC will send an ACK and then the Server info message. If the ACK or the message is not received, you are probably talking to an old firmware version of the AT2000. If it is received and the system is "HEC", then you are talking to a HEC. We recommend that you verify only if the character string starts with the letters HEC. In the future, more values can be added.
3. You **should** then perform a GET_AVAILABLE_SWITCH_POSITION command, which will return all the available switch positions.
4. You **should** now to select the node you want by sending a GetSetNODE command. The node is successfully selected when you receive an ACK message from the HEC. If the command is not sent, you will receive traces from Node 1.
5. Next, you **have** to retrieve settings associated to that node by sending a GetSettings command. Just after you receive an ACK message that indicates that the command was successfully received by the HEC, you will receive the settings of the node.
6. The last command you **have** to send before receiving traces is a TRIGGER command, which the HEC will acknowledge with an ACK message. If you sent a Trigger 0, The HEC send traces to you as fast as possible. If you sent a Trigger with a non-zero value, the HEC will send you a single trace, as soon as one is available.

6.6.2 Receiving messages from the HEC

Several messages may be received at any time from the HEC which are echoed from the AT2000, such as BattLow, However, two important messages must be handled properly in order to have a successful connection.

1. The `SYNC_REQUEST` can be sent anytime to indicate that the configuration of the AT2000 has changed. A SYNC_REQUEST message can contains the type of information which needs to be refreshed, however for now the message will always contain the value 0xFFFF, which means that:
    a. The GET_AVAILABLE_SWITCH_POSITION message must be sent.
    b. A new switch position must be sent
    c. The current settings must be retrieved from the HEC
    d. A Trigger 0 should be sent, but is not necessary.
2. The TEXT_MESSAGE can be sent anytime to warn the user that traces will not be received due to a problem. It will contain the text to display until a new TEXT_MESSAGE is sent or traces are received again. The message may be on multiple lines and will be separated by Carriage Return and Line Feed characters. While a TEXT_MESSAGE is displayed, the user should only be allowed to logoff from the HEC.

6.6.3 HEC Commands quick table index

S ➔ Sender, R ➔ Receiver, X ➔ Sender and Receiver

Type	Command	PC	HM	HEC	Page	Message Type	Description
1		X	X	X	23	ACK	Request received successfully
2		X	X	X	24	NACK	Request error
3		S	R	X	25	Logon	Registration of connection
4		S	R	X	26	Logoff	Deregistration of connection
5		R	S	X	100	Acquisition Trace	Trace sent in response to a Trigger in SA, SS, TDMA, DCP
20	**GENERAL_COMMAND**						
	1	S	R		87	Get Settings	Requests the settings
	4	S	R		37	Get Firmware Version	Requests the firmware version
	12	S	R	X	47	Get Server Info	Retrieves what type of server we are talking to.
	13	R	S	X	48	Synchronize	The server indicates that a synchronization may be required
	14	R		S	49	Text Message	Text message to be displayed by the client
	16				51	Get Connection Info	????
	17				52	Get Current Alarm Threshold	????
	18	S	R	S	53	Get File CRC32	????
	20	S		R	55	Get List of HM	Retrieve from the server the AT2x00 handled by the server
	21	S		R	56	Get List of Node Names	Retrieve from the server the MUX nodes names.
80	**SWITCH_NETWORK**						
	0x8002	S	R	X	75	Ask For Number of RPTP	Get Maximum Switch position
	0x8004	S	R		77	Clear RPTP	Turn off a switch position
	0x8005	S	R	X	78	Select One RPTP	Select 1 switch position
	0x8009	S	R	X	82	Ask For the list of available RPTP	Get list of available RPTP
89		R	S		101		
93		R	S	X	29	Switch Error	Multiplexer error
96		R	S	X	32	Battery Low	Low voltage battery warning
97		R	S	X	33	Shutoff	Low voltage battery error (power supply too low)
98		S	R	X		Trigger	Starts X acquisitions.

6.6.3.1 ACK

See ACK

6.6.3.2 NACK

See NACK

6.6.3.3 Logon

See Logon

6.6.3.4 Logoff

See Logoff

6.6.3.5 Switch Error

See Switch Error

6.6.3.6 Battery Low

See Battery Low

6.6.3.7 Shut Off

See Shut Off

6.6.3.8 Remote

6.6.3.9 Get Settings

See Get Settings

6.6.3.10 Polling

See Polling

6.6.3.11 Trigger

See Trigger

6.6.3.12 Get Server Info

See Get Server Info

6.6.3.13 Sync

See Sync

6.6.3.14 Text Message Command

See Text Message Command

6.6.3.15 Get List Of HM

See Get List Of HM

6.6.3.16 Get Node Names

See **Get Node Name**

6.6.3.17 Ask For Current RPTP Number

See Ask For Current RPTP Number

6.6.3.18 Ask For Number of RPTP

See Ask For Number of RPTP

6.6.3.19 Select One RPTP

See Select One RPTP

6.6.3.20 Ask For the list of available RPTP

See Ask for the list of available RPTP

6.6.3.21 Select Requested

See Select Requested

6.6.3.22 Send Requested

See Send Requested

6.6.3.23 Get Source Sequence

See Get Source Sequence

6.6.3.24 Set Throttling Values

See Set Throttling Values

6.6.3.25 TCP/IP Test Packet

This packet is sent from the AT2000 to the client *(CLIENT ← HEC)*.

This command is sent by the HEC if it didn't detect any activity on the TCP/IP port for more than 30 seconds. It is used to detect if the lack of communication is caused by a loss of socket.

This packet doesn't follow the AT2000 protocol

It simply consists of 10 consecutive CAN (Cancel) characters (24 or 0x18) followed by a NUL character (0).

The client should ignore this packet completely.

No response is needed or expected. However, you have to make sure to ignore this packet.

Glossary

DOWNLOAD	:	Network Manager → HM
UPLOAD	:	Network Manager ← HM

Appendix A (File Transfer overview)

DANGER

Note : These marked commands are a potential threat to the integrity of your system. Your spectrum analyzer requires certain files to work properly. Downloading, deleting or renaming these files may cause your spectrum analyzer to report improper results or even worst prevent it to boot properly. A special care must be taken into your file naming convention.

A File transfer is a multiple step process.

1. The Init File Transfer request is always initiated by the remote client. To this, the server will acknowledge the request and sent information in the file requested or in the case of a upload or information on the remaining disk space on the server disk. It is the responsibility to the client to pursue the transfer or not. A file size of zero(0) indicates that the file do not exists or that the actual file is empty. Therefore, the transfer is not performed.

2. After comes a series of File Transfer Blocks. Naturally the owner of the file has the responsibility to send the data blocks. These blocks contain enough information to reconstruct the initial file. Each block contain:

   - the data length of the current block.
   - The file position of the current block.
   - A sequence number.

   The receiving process must acknowledge each block by either an ACK or NACK. The ACK (with the sequence number of the last data block) tells the sender that the last block was successfully received and stored. Different NACKs can be returned to the sender depending of the action initiated by the receiver:

   1. A Cancel file transfer will make the sender to go to a close file transfer state.
   2. A Transfer Packet Error will make the sender retransmit the last packet. In a sense this is a simple recovery mechanism.

3. The Close File Reception is always sent by the receiver.

4. Timeouts and retries are always actives. I.e. A Request that must be acknowledged, must be acknowledged in a specific amount of time. If a request is not acknowledged in the specified time frame, the request is retransmitted a specific amount of time. This way heavy loaded remote systems have a chance to receive and process every requests.

DOWNLOAD FILE FLOW CHART

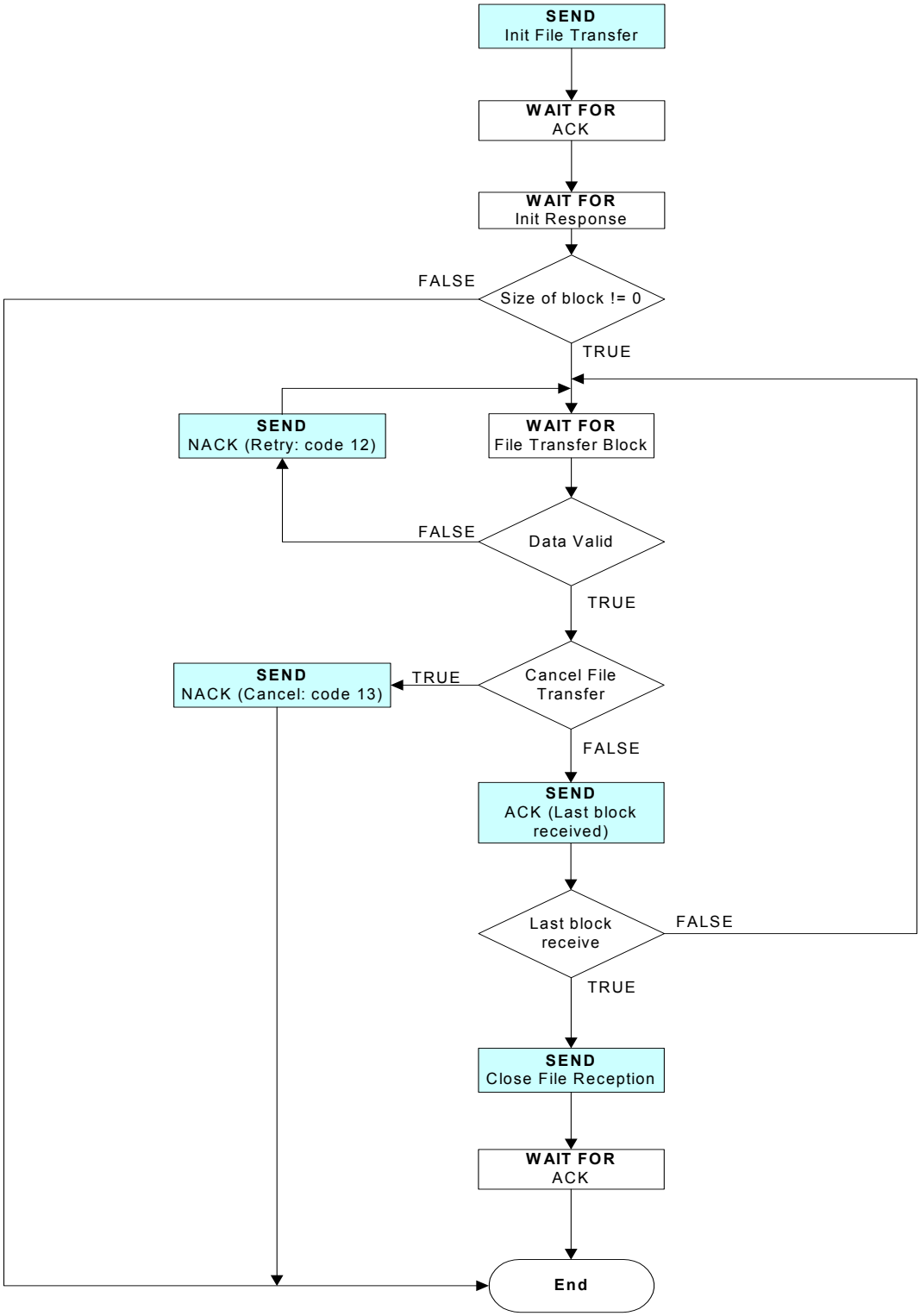

UPLOAD FILE FLOW CHART

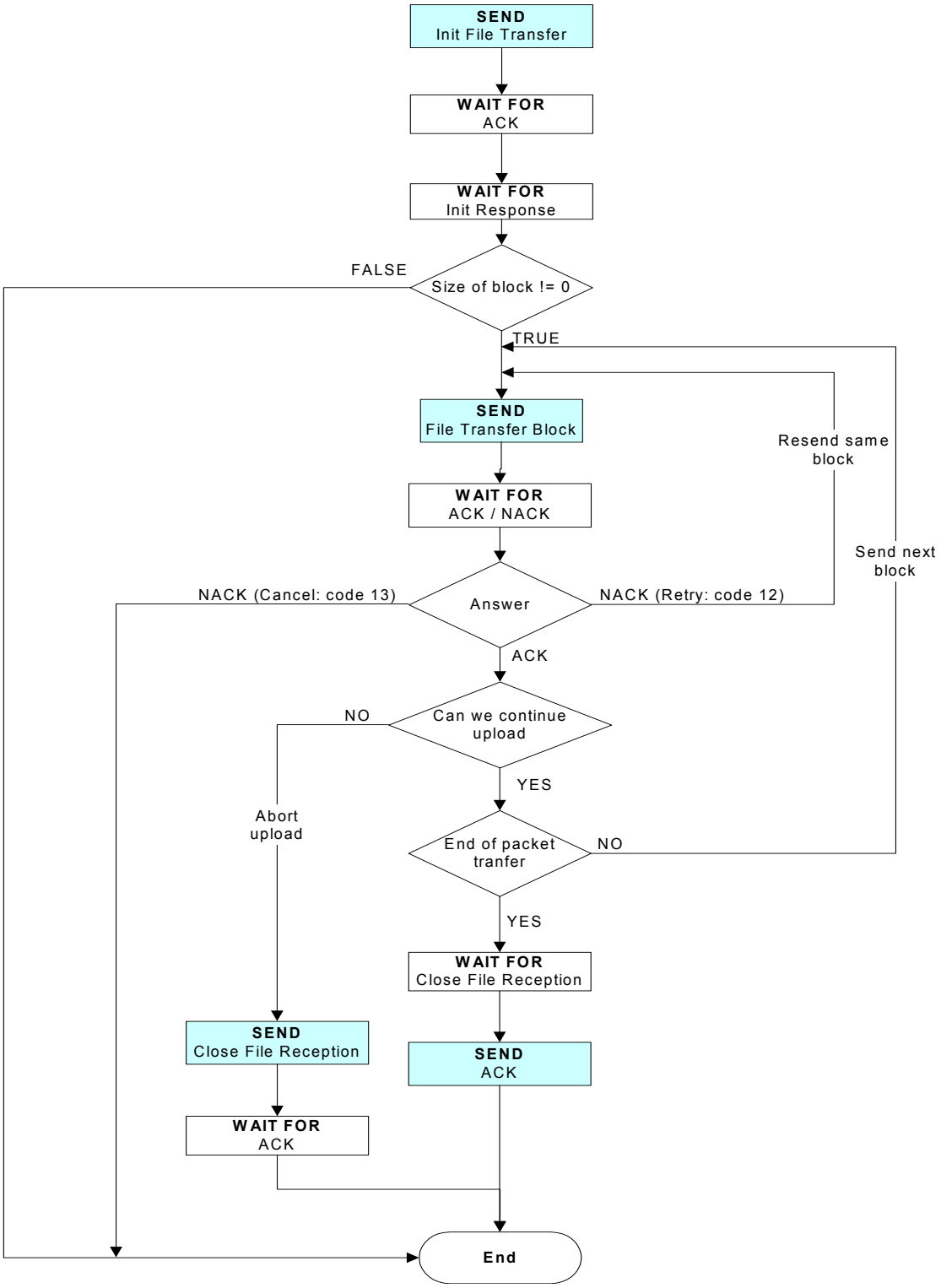

Appendix B (Alignment algorithm)

"Realignment" algorithm (625 (8Bits) to 500 (10Bits)) PC side

```
for (int i = 0; i < 125; i++)
{
        DATA[(4 * i)]      = ((int) (COM_BUF[{5 * i)]                << 2))   | ((int) COM_BUF[(5 * i) + 1] >> 6);
        DATA[(4 * i) + 1] = ((int) (COM_BUF[(5 * i) + 1] & 0x3F) << 4))  |  ((int) COM_BUF[(5 * i) + 2] >> 4);
        DATA[(4 * i) + 2] = ((int) (COM_BUF[(5 * i) + 2] & 0x0F) << 6))  |  ((int) COM_BUF[(5 * i) + 3] >> 2);
        DATA[(4 * i) + 3] = ((int) (COM_BUF[(5 * i) + 3] & 0x03) << 8))  |  ((int) COM_BUF[(5 * i) + 4]);
}
```

Total: 500 words of 10Bits

"alignment" algorithm (500 (10Bits) to 625 (8Bits)) HM side

```
for (int i = 0; i < 125; i++)
{
        COM_BUF[(5 * i)]      = ((DATA[4 * i]        >> 2)  &  0x00FF);
        COM_BUF[(5 * i) + 1] = ((DATA[4 * i]        << 6)  &  0x00C0)  |  ((DATA[(4 * i) + 1]  >> 4)  &  0x003F);
        COM_BUF[(5 * i) + 2] = ((DATA[(4 * i) + 1] << 4)  &  0x00F0)  |  ((DATA[(4 * i) + 2]  >> 6)  &  0x000F);
        COM_BUF[(5 * i) + 3] = ((DATA[(4 * i) + 2] << 2)  &  0x00FC)  |  ((DATA[(4 * i) + 3]  >> 8)  &  0x0003);
        COM_BUF[(5 * i) + 4] = (DATA[(4 * i) + 3] & 0x00FF);
}
```

Total: 625 words of 8Bits

Appendix C (Mode Numbers)

#	Mode	Description
0	SA	Spectrum Analyser
1	SS	System Sweep
2	BAS	Bidirectionnal Alignement System
3	DCP	Digital Channel Power
4	SM1	Frequency Counter
5	SM2	TV Channel
6	SM6	Multi Carrier
7	SMn	Auto Test
8	HUM	HUM
9	NI	C/N, C.S.O., C.T.B.
10	FR	Frequency Response
11	DM	Depth of Modulation
13	MONITORING	Monitoring (current value)
14	TDMA	Time Domain Analyzer
15	QAM	QAM Analyzer
16	MONITORING	Reserved value…
18	DIGITAL MONITORING	QAM monitoring
19	ANALOG MONITOING	CATV monitoring

Appendix D (Command Index)

S ➔ Sender, R ➔ Receiver, X ➔ Sender and Receiver

Type	Command	PC	HM	HEC	Page	Message Type	Description
0						RESERVED	
1		X	X	X	23	ACK	Request received successfully
2		X	X	X	24	NACK	Request error
3		S	R	X	25	Logon	Registration of connection
4		S	R	X	26	Logoff	Deregistration of connection
5		R	S	X	100	Acquisition Trace	Trace sent in response to a Trigger in SA,SS,TDMA,DCP
6		X				Control Spectrum	
7	**QAM**						
	0	R	S		108	QAM Constellation	Trace sent in response to a Trigger
	1	R	S		109	QAM Statistics	Trace sent in response to a Trigger
	2	R	S		110	QAM Equalizer	Trace sent in response to a Trigger
	3	S	S		111	QAM Diagnostic	Trace sent in response to a Start Diagnostics command
	3	R	S		113	Start QAM Diagnostics	Request to send a Start Diagnostics
	10	S	R		114	Set Equalizer Settings	Set the 3 equalizers settings
	11	S	R		115	Get Equalizer Settings	Requests the 3 equalizers settings
	12	S	R		116	Set Normalization File	Set which normalization to apply
	13	S	R		117	Get Normalization File	Retrieve which normalization is currently apply
8	**DCP**						
	1	S	R		104	Do Digital Channel Measure	
9							
	1	S	R				When in Manual Trigger mode, send a trigger
10	**BAR modes (SM1, SM2, SM6, Auto-Test)**						
	0	R	S		118	Channel Trace	Trace sent in response to a Trigger in SM1, SM2, SM6 + Auto-Test traces
11	**Auto-Test mode (Auto-Test)**						
	0	R	S		105	Auto-Test Trace	A single trace from the Auto-Test measure
12	**DOM**						
	1	S	R			Get Current Modulation	
13	**CCN/CSO/TB**						
	16	S	R			Do Measures	
15	**MOS**						
	0	R	S		123	PORT_REQUEST	Request the RTP Listener Port
	1	S	R		123	PORT_REPLY	Supply the RTP Listener Port
	2	R	S		124	START_STREAM	Start an RTP stream to the meter
	3	R	S		125	STOP_STREAM	Stop an RTP stream to the meter
	4	S	R		125	STOP_REPLY	Return the packet count
	5	R	S		126	MOS_DATA_REQUEST	Request MOS data
	6	S	R		126	MOS_DATA_REPLY	Send MOS data
	7	R	S		127	MOS_COUNT_REQUEST	Request an RTP packet count
	8	S	R		127	MOS_ COUNT _REPLY	Return the RTP packet count
20	**GENERAL_COMMAND**						
	1	S	R		36	Get Settings	Requests the settings
	2	S	R		36	Set Settings	Sets the settings
	4	S	R		37	Get Firmware Version	Requests the firmware version
	5	S	R		39	Get Date Time	Requests the Date and Time
	6	S	R		40	Set Date Time	Sets the Date and Time
	7	S	R		41	Get Hardware Configuration	Requests the Hardware configuration
	8	S	R		43	Get Temperature	Requests the temperature
	9	S	R		44	Init File Transfer	Init a file transfer
	10	X	X		45	File Transfer block	A block of file transfer
	11	X	X		45	Close file Transfer	Message interrupting or completing a file transfer
	12	S	R	X	47	Get Server Info	Retrieves what type of server we are talking to.
	13	R	S	X	48	Synchronize	The server indicates that a synchronization may be required
	14	R		S	49	Text Message	Text message to be displayed by the client
	15	S	R		50	Soft Reboot	Reboot selected component
	16				51	Get Connection_Info	????
	17				52	Get Current Alarm Threshold	????
	18	S	R	S	53	Get File CRC32	????
	19				54	Reload Channel Plan	????

	20	S		R	55	Get List of HM	Retrieve from the server the AT2x00 handled by the server
	21	S		R	56	Get List of Node Names	Retrieve from the server the MUX nodes names.
	22	S	R		58	Rename File	Rename a file on the Spectrum Analyzer
	23	S	R		59	Delete Files	Delete Files on the Spectrum Analyzer
	25				60	Transaction Request	Request the client to synchronize the specified resource
	26	S	R		61	SNMP Config	
25	**LOGAMP TRACE COMMAND**						
		R	S	R	62	**Logamp Trace**	Sends all required information for all logamp mode trace
50	**XML COMMAND**						
	1	S	R		65	Get Settings	Requests the settings
	2	S	R		67	Set Settings	Initialize the settings
	3	S	R		68	SetCompensation	Enable/disable compensation
	4	S	R		69	GetCompensation	Retrieve the current compensation
	5	S	R		70	Sync Firmware	Perform a firmware upgrade
79	**NETWORK COMMAND**						
		S	R	X	69	Remote IP Commit	Instruct the server to apply the previously sent network settings
80	**SWITCH_NETWORK**						
	1-256	S	R		73	Select RPTP Number	Set the current switch position
	0x8001	S	R	X	74	Ask For Current RPTP Number	Get Current Switch position
	0x8002	S	R	X	75	Ask For Number of RPTP	Get Maximum Switch position
	0x8003	S	R		76		Set Wink Switch
	0x8004	S	R		77	Clear RPTP	Turn off a switch position
	0x8005	S	R	X	78	Select One RPTP	Select 1 switch position
	0x8006	S	R		79	Toggle an RPTP	Toggle 1 switch position
	0x8007	S	R		72	Add an RPTP	Turn on a switch position (non exclusive)
	0x8008	S	R		81	Ask For the List of selected RPTP	Get list of active RPTP
	0x8009	S	R	X	82	Ask For the list of available RPTP	Get list of available RPTP
	0x800A	S	R		83	Allow Sequence Mode	Enable/disable sequence mode for Sunrise MUX
	0x8010	S	R		84	Update SUNRISE switch firmware	Update Sunrise MUX firmware
89		R	S		101		
90	**MONITORING**						
	1	S	R		130	START	Starts a monitoring session of the currently selected mode.
	1	S	R		131	START (FUTURE)	
	2	S	R		132	STOP	Stops the currently running monitoring session.
	3	S	R		133	PAUSE	Pauses the currently running monitoring session.
	4	S	R		134	PING	Poll the HM
	5	S	R		135		
	6	S	R		136		
	7	S	R		137	POLL STATUS	Poll the current monitoring status.
	8	S	R		138	DELETE ALARMS	Deletes all alarms.
	9	S	R		139	DELETE STATS	Deletes all statistics.
	10	S	R		140	DELETE INTGS	Deletes all integrals.
	11	S	R		141	NEXT ALARM	Requests the transmission of the next stocked alarm.
	12	S	R		142	NEXT STAT	Requests the transmission of the next stocked statistic.
	13	S	R		143	NEXT INTG	Requests the transmission of the next stocked integral.
	14	S	R		144	RESET ERROR	Clears the current monitoring error status.
	15		R		146		Retrieves from the SERVER its serial number.
	16	S	R		147	SELECT REQUESTED	Requests the server to send a node live trace.
	16	R	S		148	SEND REQUESTED	Live trace of a requested node.
	17	S	R		149	SET WORKING_MODE	Sets the working monitoring mode
	18	S	R		150	GET SOURCE SEQUENCE	Retrieves the monitoring signal sources.
	19	S	R		151	GET SOURCE SETTINGS	Retrieves the settings of the specified source.
	20	S	R		153	SET THROTTLING VALUE	Sets the percentage of CPU given to the monitoring.
	21	S	R		154		Retrieves the threshold information on a given signal source.
	22	S	R		155	Next Alarm32	Requests the transmission of the next stocked alarm.
	40 (“(“)	R	S		156	ERROR MONITORING	Error while monitoring.
	41 (“)“)	R			157	IMAGE	Alarm Content.
	42 (“*“)	R	S		158		Alarm Content.
	43 (“+“)	R	S		159	STATISTIC	
	44 (“,“)	R	S		160		Integral Content.
	45 (“-“)	R	S		161	STATUS	Current monitoring status.

	46 (“.”)	R	S		162	ALARM WITHOUT IMAGE (new format)	Alarm Content.
	47 (“/”)	R	S		163	ALARM WITH IMAGE (new format)	Alarm Content.
	48 (“0”)	R	S		164	STATISTIC (new format)	Statistic Content.
	49 (“1”)	R	S		165	ALARM WITH IMAGE (multimode)	Alarm Content.
91		R	S	X	27	System Error	System server error
92		R	S	X	28	General Error	System server error
93		R	S	X	29	Switch Error	Multiplexer error
94		S	R		30	New Mode	Change spectrum mode
95		S	R		31		Deprecated
96		R	S	X	32	Battery Low	Low voltage battery warning
97		R	S	X	33	Shutoff	Low voltage battery error (power supply too low)
98		S	R	X		Trigger	Starts X acquisitions.
99		S	R		34		Preliminary

Appendix E (Remote Network settings) (at2500 only)

- Getting the current network configuration is as easy as getting a file from the unit (/etc/sysconfig/network-scripts/ifcfg-eth0.xml). The file transferred will be generated on the fly and transferred to the client in an xml format.

- Changing the network settings is a multi-step process.

  1. Send the /etc/sysconfig/network-script/ifcfg-eth0.xml file to the at2500.

  2. Send a Reboot Network. The HM will :

     - Close all connections

     - Parse the transferred file.

     - Apply the new network settings.

     - Open a listening port (3001).

  3. Reestablish a connection to the new settings and send a Remote IP Commit.

  4. The file format if the file is described in Appendix G

  5. If the client fails to re-establish the connection to the to the new network settings, the AT2500 will revert to its original ones.

  Note: Certain systems the file may be located in another directory.

Appendix F (QIA Timings)

A QIA test can take from a few seconds to almost 1 minute to execute, depending on which tests are requested. Here is a table of the timing for each test.

These timings exclude the 4 seconds attenuator search performed once the QAM settings are sent now the time it takes to lock to the channel.

Please note that tests are often grouped together, and that if at least 1 test of the group is enabled, the whole time is taken. For example, if Carrier Offset or Symbol Rate PPM is enabled, 2 seconds are added to the processing time. If both are enabled, 2 seconds, and not 4, are added to the processing time.

Finally, if any test other than the Power level flag is active, 3 seconds is added to the processing time.

Test Name	Time to Execute	Time to lock
Power level	4 seconds	0 seconds
Mer	2 seconds	3 seconds
Enm		
Evm		
System Noise	9 seconds	
CW Interference		
Compression		
IQ Gain Diff.		
IQ Phase Diff.		
Phase Noise		
Digital Hum	29 seconds	
Frequency Response	0 seconds	
Echo Margin	0 seconds	
Echo Margin Tap Index		
Carrier Offset	2 seconds	
Symbol Rate PPM		

Appendix G (Available files)

Some files are available from the spectrum analyzer. Some are auto-generated and some are static. Changing the auto-generated one may only affect the current session. However changing the static ones may affect the validity of the measures you are performing and event the integrity of your unit. Special care is mandatory when updating these files. This section describes the file format of some of the files available from your unit. Note that linux file names are formed of lowercase alpha-numeric values only.

The file descriptions shown here follow the Backus-Naur form.

This section describes the common ortion of the following file descriptions:

XMLHeader → XMLTagStart XMLTagVersion XMLTagEncoding XMLTagStandalone XMLTagEnd
XMLTagStart → "<?xml"
XMLTagVersion → "version=" numstring
XMLTagEncoding → "encoding=\"UTF-8\""
XMLTagStandalone → "standalone=\"no\""
XMLTagEnd → "?>"

FieldValue → string | numstring
EndTagField → “</” *FieldName* “>”
FieldName → string
Actions → "<Commit />" | "<Return />"
string → { letter | number }
numstring → [“+” | “-“] { number }+ [[“.”] { number } [“e” [“+” | “-“] { number }+]]
letter → “A” – “Z” | “a” – “z”
number → “0” – “9”
FileName → [“/” | “_” | string]+
Date → Year “-“ Month “-“ Day “ “ Hour “:” Min “:” Secs
Year → (number)4
Month → (number)2
Day → (number)2
Hour → (number)2
Min → (number)2
Secs → (number)2
StrIPAddress → Nibble “.” Nibble “.” Nibble “.” Nibble
Nibble → (number)0..3

G.1 file.type.xml

This static file was introduced with the AT2500 and contains the location of system files required for Sunrise's Windows applications. It is in a XML encoding type. This file is not available on AT2000 system.

G.2 features.xml

This dynamic file was introduced for the AT1800. It is generated at each system starts and contains what the unit can "support". It is in a XML encoding type. This file is not available on AT2000 and AT2500 systems.

G.3 ifcfg-eth0.xml

This dynamic file is generated on demand by remote clients. It contains the current network configuration of the system. It is also deleted as soon as the file transfer is finished. It was introduced for the AT2500. It is therefore nor available on AT2000. It is in a XML encoding type.

XMLFile	→ XMLHeader NetConfig
NetConfig	→ "<DeviceCommSettings>" Settings "</DeviceCommSettings>"
Settings	→ Adapter DCHP NetMask IPAddress Gateway HostName DomainName
Adapter	→ "<Adapter>" "eth0" "</Adapter>"
DHCP	→ "<DHCP>" ["disabled" | "enabled"] "< /DHCP >"
Netmask	→ "<NetMask>" StrIPAddress "</NetMask>"
Gateway	→ "<Gateway>" StrIPAddress "</Gateway>"
IPAddress	→ "<IPAddress>" StrIPAddress "</IPAddress>"
HostName	→ "<HostName>" string "</HostName>"
DomainName	→ "<DomainName>" string "</DomainName>"

Example:

```
<?xml version="1.0" encoding="UTF-8" standalone="no" ?>
<DeviceCommSettings>
        <Adapter>eth0</Adapter>
        <DHCP>disabled</DHCP>
        <NetMask>255.255.255.0</NetMask>
        <IpAddr>192.168.50.223</IpAddr>
        <Gateway>192.168.50.5</Gateway>
        <HostName>localhost</HostName>
        <DomainName>localdomain</DomainName>
</DeviceCommSettings>
```

G.4 Directory Listing

This dynamic file is generated on demand by remote client. It contains the directory content of the specified path (filename). It deleted as soon as the file transfer is finished. It was introduced for the AT2500. It is therefore nor available on AT2000. It is in a XML encoding type.

XMLFile → XMLHeader DirectoryList
DirectoryList → “<PathEnumeration path=\” FileName \” “>” {DirectoryEntry} “</PathEnumeration>”
DirectoryEntry → “<Entry type=” [“\”file\”” | “\”folder\””] “>” EntryInfo “</Entry>”
EntryInfo → Name Size LastAccessTime LastModificationTime LastChangeTime
Name → “<Name>” FileName “</Name>”
Size → “<Size>” numstring “</Size>”
LastAccessTime → “<LastAccessTime>” Date “</LastAccessTime>”
LastModificationTime → “<LastModificationTime>” Date “</LastModificationTime>”
LastChangeTime → “<LastChangeTime>” Date “</LastChangeTime>”

Example:

```
<?xml version="1.0" encoding="UTF-8" standalone="no" ?>
<PathEnumeration path="//usr/local/bin/">

  <Entry type="file">
    <Name>LibGraphicsTest</Name>
    <Size>529218</Size>
    <LastAccessTime>2006-04-10 13:04:19</LastAccessTime>
    <LastModificationTime>2006-04-25 15:04:50</LastModificationTime>
    <LastChangeTime>2006-04-25 15:04:50</LastChangeTime>
  </Entry>

  <Entry type="file">
    <Name>LibHALTest</Name>
    <Size>81658</Size>
    <LastAccessTime>2006-04-10 13:04:04</LastAccessTime>
    <LastModificationTime>2006-04-24 19:04:51</LastModificationTime>
    <LastChangeTime>2006-04-24 19:04:51</LastChangeTime>
  </Entry>

  <Entry type="folder">
    <Name>atsoft</Name>
    <Size>4096</Size>
    <LastAccessTime>2006-04-25 18:04:58</LastAccessTime>
    <LastModificationTime>2006-04-25 18:04:25</LastModificationTime>
    <LastChangeTime>2006-04-25 18:04:25</LastChangeTime>
  </Entry>

</PathEnumeration>
```

END OF DOCUMENT