Model Engineering College, Thrikkakara

Department of Electronics Engineering

PROJECT REPORT

on

"Visitor Control using 8051 Microcontroller and Dual IR Sensors"

Submitted by

Aryan Vinod (Roll No: MDL24EVLSI014)

Geo George Josan (Roll No: MDL24EVLSI026)

Helen Martin Jose (Roll No: MDL24EVLSI028)

4th Semester, Academic Year 2025–26

B Tech (Electronics (VLSI Design & Technology))

Micro controller and Embedded System

Department of Electronics Engineering

Model Engineering College, Thrikkakara

(Affiliated to APJ Abdul Kalam Keala Technological University)

March 31, 2026

Certificate

This is to certify that the project titled **Visitor Counter using 8051 Microcontoller and IR sensors** has been carried out by **Aryan Vinod (Roll No: MDL24EVLSI014)** and **Geo George Josan (Roll No:MDL24EVLSI026) Helen Martin Jose (Roll No:MDL24EVLSI028)** as part of the course **Microcontroller and Embedded System** during the 4th semester of the B.E./B.Tech programme under my supervision.

Signature of Faculty

Krishnapriya P

Department of Electronics and Communication Engineering

Model Engineering College, Thrikkakara

Declaration

We hereby declare that the work presented in this report, titled **"Visitor Counter using 8051 Microcontroller and IR sensor"**, is carried out by us as part of the course **Micro controller and Embedded System**. The results and information presented in this report are based on our own study and design, except where references are made to published literature.

Aryan Vinod

Geo George Josan

Helen Martin Jose

Acknowledgement

We express our sincere gratitude to **Krishnapriya P**, our course instructor, for the valuable guidance and encouragement provided throughout the project. We also thank the department faculty and laboratory staff for their support and assistance.

Team Members

Abstract

This report presents the design, simulation, and implementation of the project titled **"Visitor Counter using 8051 Microcontroller and Dual IR Sensors"** as part of the Microcontrollers and Embedded Systems course. The project focuses on developing an automated system to monitor and count the number of people entering and exiting a premises using embedded system principles.

The system utilizes two Infrared (IR) sensors to detect directional movement, enabling accurate increment and decrement of the visitor count. The 8051 microcontroller processes the sensor inputs and executes the counting logic. The updated count is displayed through an output interface such as an LCD or seven-segment display.

The methodology includes system design, sensor interfacing, embedded programming, and simulation verification, followed by hardware implementation. The project demonstrates the practical application of microcontroller-based system design, real-time data processing, and digital interfacing. The report summarizes the objectives, working principle, design approach, and implementation results, highlighting the effectiveness and reliability of the visitor counting system.s.

Contents

Certificate **1**

Declaration **2**

Acknowledgement **3**

Abstract **4**

1 Introduction **9**

2 Case Study or Field Survey **10**

3 Objectives **11**

4 Motivation **12**

5 Innovation / Contribution **13**

6 Literature Review **14**

7 Project Plan **15**

8 Block Diagram **16**

9 Hardware / Software Tools **17**

10 Design Details **18**

11 Schematic Diagram **19**

12 Implementation Details **20**

13 Results and Discussion **22**

14 Bill of Materials **24**

15 Conclusion **25**

16 Future Work **26**

17 References **27**

A Appendix **28**

List of Figures

8.1 Enter Caption 16

11.1 ”Simulation Done in Protues 19

12.1 Hardware 21

13.1 Protues Simulation 22
13.2 When 1 person enters room 22
13.3 Incrementing count 23
13.4 Indication of Full room with buzzer/LED 23
13.5 Decrementing count 23

List of Tables

7.1 Placeholder Caption 15

14.1 Bill of Materials for Visitor Counter System 24

1. Introduction

In modern environments such as shopping malls, offices, classrooms, and public buildings, monitoring the number of people entering and exiting a space is essential for security, resource management, and occupancy control. Manual counting methods are often inaccurate and inefficient, especially in crowded areas. This has led to the development of automated visitor counting systems using embedded technologies.

This project presents a Visitor Counter using an 8051 Microcontroller and Dual IR Sensors, designed as part of the Microcontrollers and Embedded Systems course. The system automatically counts the number of visitors by detecting their movement through an entry/exit point. Two Infrared (IR) sensors are used to determine the direction of movement—whether a person is entering or leaving—ensuring accurate incrementing and decrementing of the count.

The 8051 microcontroller serves as the core processing unit, receiving inputs from the sensors, executing the counting logic, and updating the display in real time. The system is designed to be simple, cost-effective, and reliable, making it suitable for practical applications in various environments.

This project helps in understanding key concepts of embedded systems such as sensor interfacing, microcontroller programming, real-time processing, and hardware implementation. It also demonstrates how digital systems can be applied to solve real-world problems efficiently.

2. Case Study or Field Survey

Automated Visitor Counter System

In many public places such as shopping malls, libraries, classrooms, and office buildings, managing and monitoring the number of people inside a space is crucial for safety, crowd control, and efficient resource utilization. Traditional methods of counting visitors manually are prone to errors, especially during peak hours, and require continuous human effort.

Consider a classroom scenario where it is necessary to keep track of the number of students present at any given time. A manual counting system may lead to inaccuracies and inefficiency. To overcome this, an automated visitor counter system using an 8051 microcontroller and IR sensors can be implemented.

In this system, two IR sensors are placed at the entrance. When a person enters, the sensors are triggered in a specific sequence, allowing the system to increment the count. Similarly, when a person exits, the reverse sequence is detected, and the count is decremented. The microcontroller processes these inputs and updates the current count, which is displayed on an LCD or seven-segment display in real time.

This automated approach improves accuracy, reduces human effort, and provides real-time monitoring. It can also be extended with additional features such as alarms for maximum occupancy limits, data logging, or integration with IoT systems for remote monitoring.

Thus, the visitor counter system demonstrates an effective real-world application of embedded systems in solving practical problems related to people counting and space management..

3. Objectives

Objectives

- To design and implement an automated visitor counting system using the 8051 microcontroller.
- To detect the entry and exit of people using dual IR sensors.
- To accurately increment and decrement the visitor count based on movement direction.
- To display the current count in real time using an LCD or seven-segment display.
- To develop and implement embedded C/assembly code for controlling the system.
- To understand and apply concepts of sensor interfacing and microcontroller programming.
- To create a reliable and cost-effective system for real-world applications.
- To reduce human effort and errors in manual counting systems.

4. Motivation

The project "Visitor Counter using 8051 Microcontroller and Dual IR Sensors" was selected to address the need for an accurate and automated system for counting people in places like classrooms, offices, and public areas, where manual counting is inefficient and error-prone. This system provides a practical solution for real-time occupancy monitoring, improving safety and resource management. Academically, it offers hands-on experience in microcontroller programming, sensor interfacing, and embedded system design, helping bridge the gap between theoretical concepts and real-world applications.

5. Innovation / Contribution

The innovation of this project lies in its use of dual IR sensors with an 8051 microcontroller to accurately detect the direction of movement, enabling both entry and exit counting rather than simple object detection. Unlike basic counters, this system differentiates between incoming and outgoing visitors using sensor sequencing, improving accuracy and reliability. The design is low-cost, compact, and easily implementable, with the potential for further enhancements such as occupancy limit alerts, data logging, and IoT-based remote monitoring, making it both practically useful and scalable.

6. Literature Review

Several research works and projects have explored automated visitor counting systems using infrared (IR) sensors and microcontrollers. Many basic systems utilize a single IR sensor to detect movement and increment a counter, displaying the result on an LCD or seven-segment display. However, such systems are limited as they cannot distinguish between entry and exit. More advanced designs implement bidirectional visitor counters using two IR sensors, where the sequence of sensor activation determines the direction of movement, enabling accurate increment and decrement of the count . Some studies have also integrated additional features such as automatic light control and IoT-based monitoring to improve energy efficiency and remote accessibility .

Despite these advancements, many existing systems face challenges such as inaccurate counting during simultaneous movement, limited detection range, and inability to differentiate between objects and humans . The proposed project improves upon these designs by implementing a simple, cost-effective 8051-based dual IR sensor system focused on reliable direction detection and real-time display. Compared to complex IoT-based systems, this design emphasizes simplicity, ease of implementation, and suitability for academic learning while still maintaining accurate bidirectional counting.

7. Project Plan

The project was carried out in a systematic manner, starting from problem identification to final implementation and testing. Initially, the requirements of the visitor counter system were analyzed, followed by the design of the system architecture using an 8051 microcontroller and dual IR sensors. The circuit design and simulation were then performed to verify functionality before hardware implementation. After successful simulation, the system was assembled, programmed, and tested for accurate counting of entry and exit. Finally, the results were analyzed and documented.

Table 7.1: Placeholder Caption

Phase	Activity	Duration
Phase 1	Problem identification and requirement analysis	Week 1
Phase 2	System design and block diagram preparation	Week 2
Phase 3	Circuit design and simulation	Week 3
Phase 4	Programming of 8051 microcontroller	Week 4
Phase 5	Hardware implementation and interfacing	Week 5
Phase 6	Testing and debugging	Week 6
Phase 7	Documentation and report preparation	Week 7

8. Block Diagram

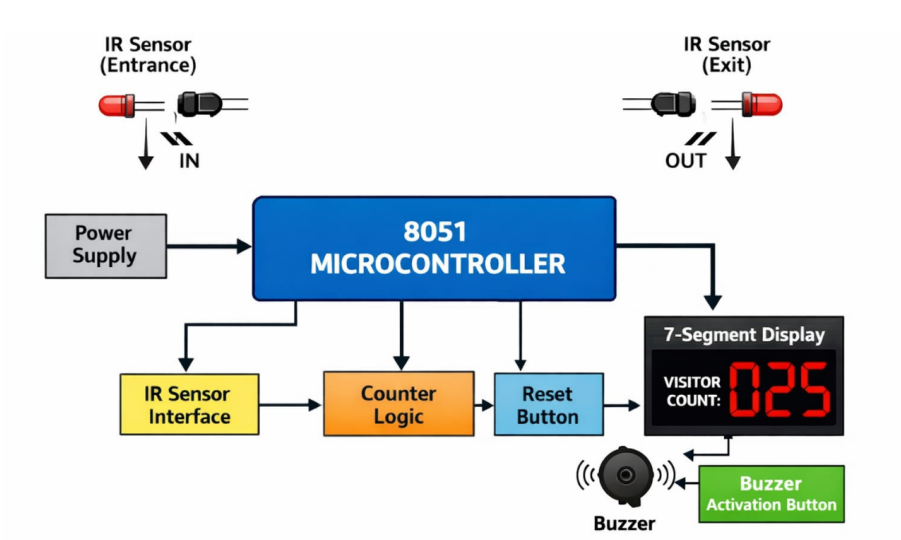

Figure 8.1: Enter Caption

9. Hardware / Software Tools

The following hardware and software tools were used for the design, simulation, and implementation of the visitor counter system:

- **Hardware Tools:**
  - 8051 Microcontroller (e.g., AT89C51/AT89S52)
  - Infrared (IR) Sensors (2 units)
  - LCD Display / Seven-Segment Display
  - Crystal Oscillator (11.0592 MHz)
  - Resistors, Capacitors, and Connecting Wires
  - Breadboard / PCB
  - Power Supply Unit
- **Software Tools:**
  - Keil μVision (for coding and compilation)
  - Proteus Design Suite (for simulation)
  - Embedded C / Assembly Language

10. Design Details

The visitor counter system is designed using an 8051 microcontroller interfaced with dual IR sensors to detect the entry and exit of people. The system operates based on the sequence of sensor activation, which determines the direction of movement.

Two IR sensors are placed at the entrance in such a way that when a person passes through, the sensors are triggered one after the other. If Sensor 1 is activated before Sensor 2, the system interprets it as an entry and increments the count. Conversely, if Sensor 2 is activated before Sensor 1, it is considered an exit, and the count is decremented.

The IR sensors provide digital signals to the input pins of the 8051 microcontroller. The microcontroller processes these inputs using an embedded program written in C/Assembly, which implements the counting logic. A crystal oscillator is used to provide the necessary clock signal for the microcontroller operation.

The output of the system is displayed using an LCD or seven-segment display, which shows the current number of visitors in real time. Proper interfacing circuits, including resistors and power supply units, are used to ensure stable and reliable operation.

The design emphasizes simplicity, low cost, and accuracy, making it suitable for real-world applications. The modular structure of the system also allows for future enhancements such as alarm systems, automatic door control, or IoT-based monitoring.

11. Schematic Diagram

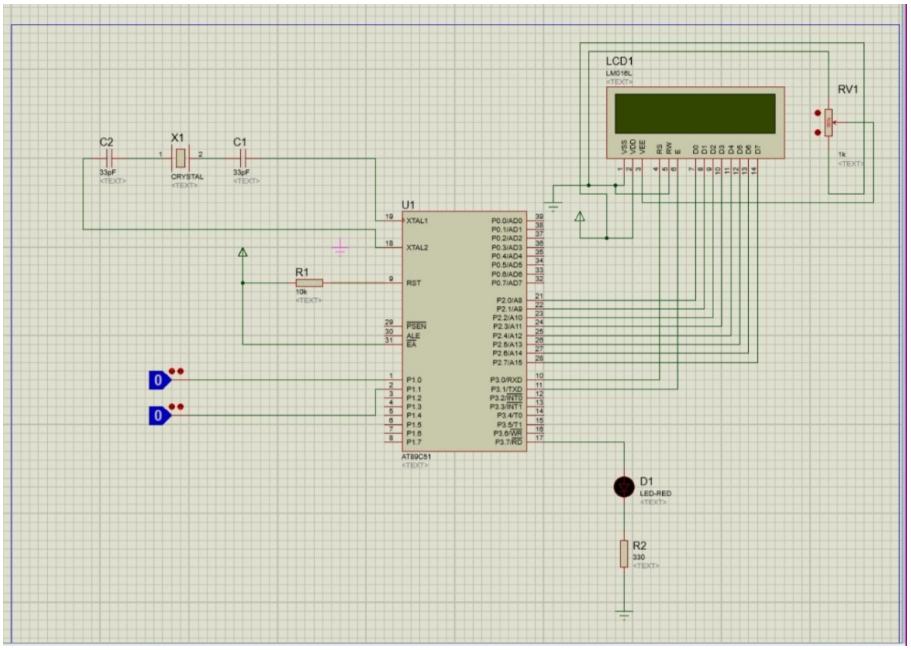

Figure 11.1: "Simulation Done in Protues

12. Implementation Details

The proposed visitor counter system was implemented using both simulation and hardware approaches to verify its functionality and performance.

Simulation: The circuit was first designed and tested using the Proteus Design Suite. The 8051 microcontroller, IR sensors, and display unit were simulated to validate the working of the system. The embedded program was written in Embedded C using Keil μVision and compiled to generate a hex file, which was then loaded into the simulated microcontroller. The simulation verified correct increment and decrement of the count based on the sequence of sensor activation.

Hardware Implementation: After successful simulation, the circuit was implemented on a breadboard. The 8051 microcontroller was interfaced with two IR sensors placed at the entry/exit point. A crystal oscillator was used to provide the clock signal, and a regulated 5V power supply was used to power the system. The output was displayed on an LCD/seven-segment display, showing the real-time visitor count. Proper connections and interfacing ensured stable operation of the system.

Steps for Testing:

- Verified power supply and microcontroller connections.
- Tested individual IR sensors for proper detection.
- Loaded the program into the microcontroller.
- Checked increment operation for entry detection.
- Checked decrement operation for exit detection.
- Validated overall system accuracy under different conditions.

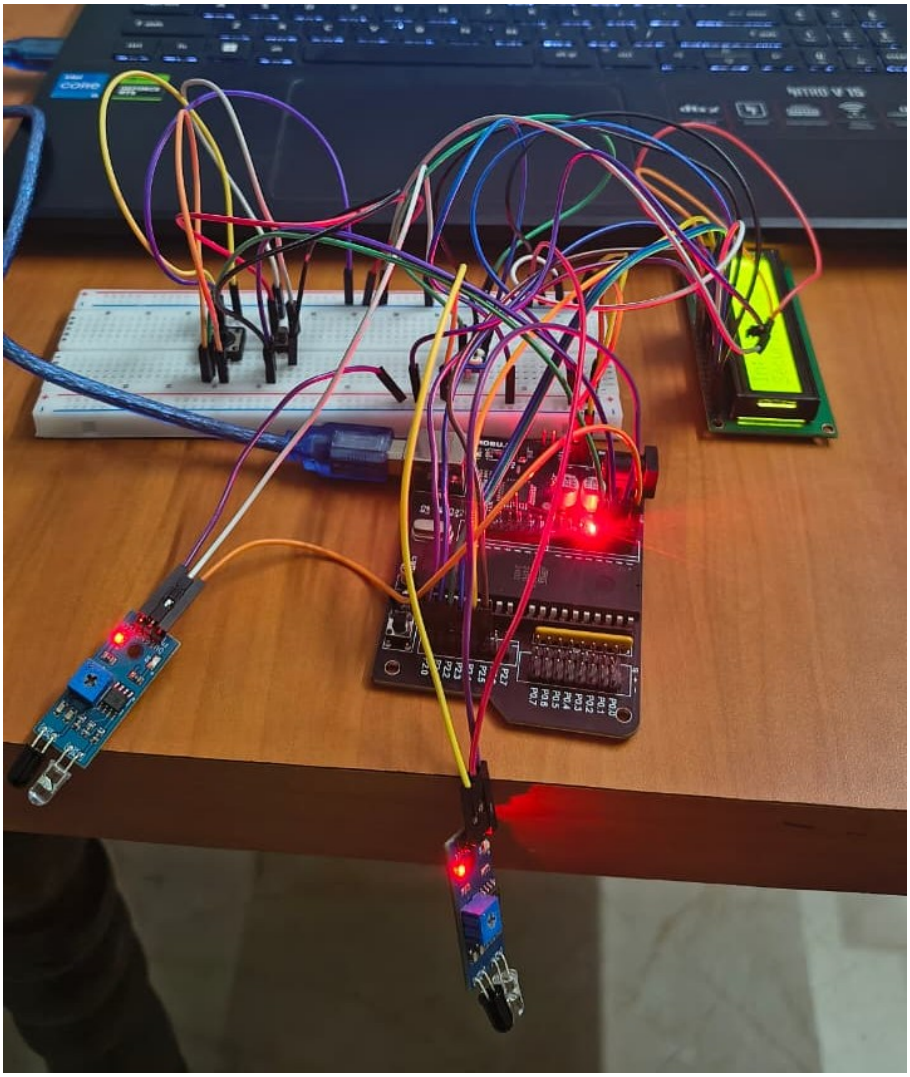

Figure 12.1: Hardware

13. Results and Discussion

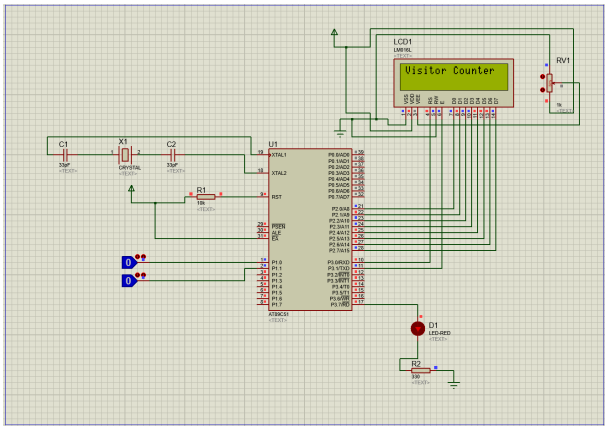

Figure 13.1: Protues Simulation

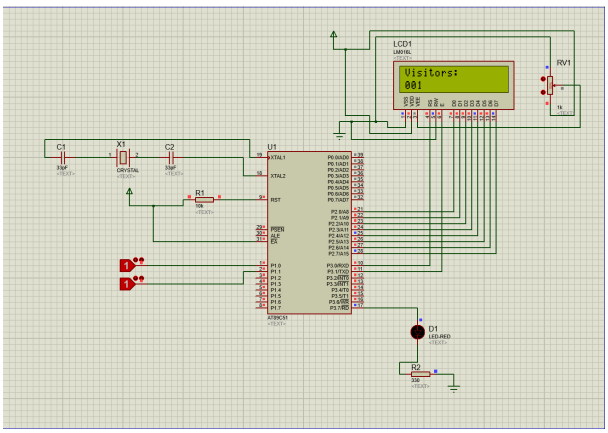

Figure 13.2: When 1 person enters room

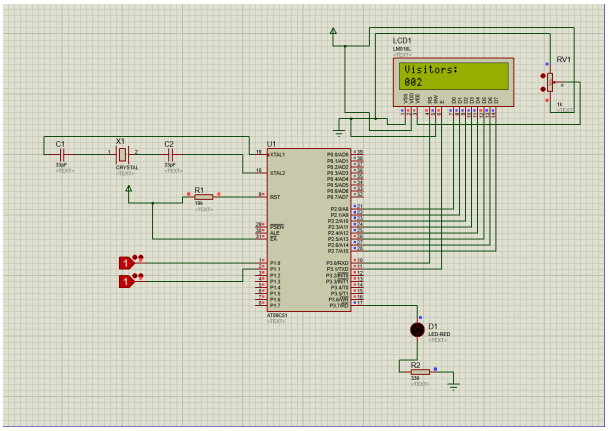

Figure 13.3: Incrementing count

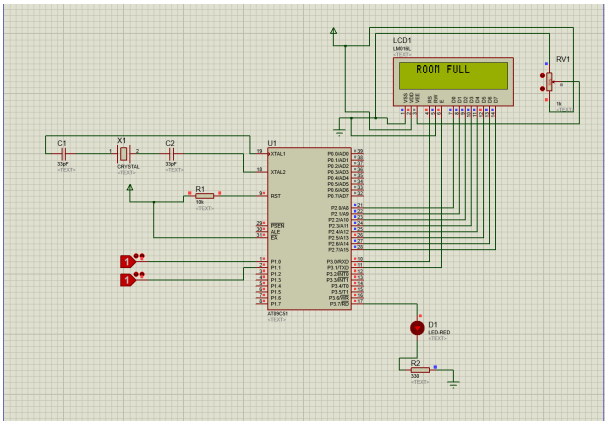

Figure 13.4: Indication of Full room with buzzer/LED

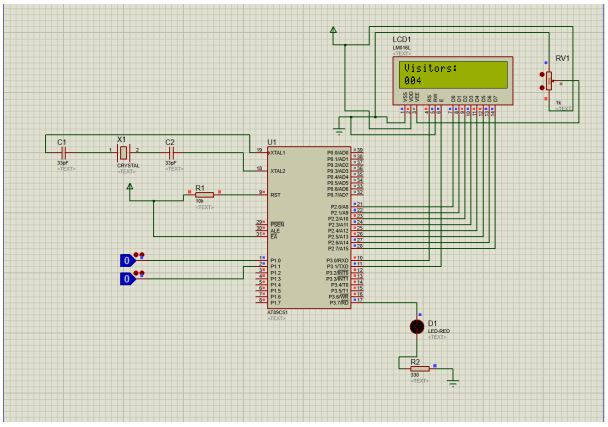

Figure 13.5: Decrementing count

14. Bill of Materials

Sl. No	Component	Quantity	Approx. Cost (INR)
1	8051 Microcontroller (AT89C51/AT89S52)	1	100
2	IR Sensor Modules	2	80
3	LCD Display (16x2) / 7-Segment Display	1	150
4	Crystal Oscillator (11.0592 MHz)	1	20
5	Capacitors	2–4	20
6	Resistors	As required	20
7	Breadboard / PCB	1	150
8	Connecting Wires	As required	50
9	Power Supply (5V)	1	100
10	Push Buttons (optional)	1–2	20
Total			**710**

Table 14.1: Bill of Materials for Visitor Counter System

15. Conclusion

The project "Visitor Counter using 8051 Microcontroller and Dual IR Sensors" was successfully designed and implemented, demonstrating an effective solution for automated people counting. The system accurately detects entry and exit using dual IR sensors and processes the data using the 8051 microcontroller to display the current count in real time.

This project highlights the practical application of embedded systems, including sensor interfacing, microcontroller programming, and real-time processing. The system is simple, cost-effective, and reliable, making it suitable for use in places such as classrooms, offices, and public areas.

Overall, the project achieved its objectives and provided valuable hands-on experience in designing and implementing a microcontroller-based system. Future improvements can include features such as wireless monitoring, data logging, and integration with smart systems for enhanced functionality.

16. Future Work

The proposed visitor counter system can be further enhanced with additional features to improve its functionality and usability. The system can be integrated with IoT technology to enable remote monitoring and data access through mobile or web applications. Data logging features can be added to store visitor records for analysis and reporting.

Advanced sensors or image processing techniques can be used to improve accuracy, especially in crowded conditions. The system can also be extended to include automatic control of lights, fans, or doors based on occupancy. Additionally, implementing alarm systems for maximum occupancy limits and using wireless communication modules can make the system more intelligent and suitable for smart building applications.

17. References

1. M. A. Mazidi, J. G. Mazidi, and R. McKinlay, *The 8051 Microcontroller and Embedded Systems*, 2nd ed. India: Pearson Education, 2006.

2. K. J. Ayala, *The 8051 Microcontroller*, 3rd ed. New Delhi, India: Cengage Learning, 2004.

3. Atmel Corporation, "AT89C51/AT89S52 Microcontroller Datasheet," 2015.

4. "IR Sensor Module – Working and Applications," Application Notes.

5. Labcenter Electronics, "Proteus Design Suite User Manual."

6. Keil Software, "Keil μVision IDE User's Guide."

7. S. Author, "Bidirectional Visitor Counter using IR Sensors," *International Journal of Research Publications*, vol. X, no. X, pp. XX–XX, Year.

8. Online tutorials and resources on 8051 microcontroller and embedded systems.

A. Appendix

```c
#include <reg51.h>

// LCD control pins
sbit RS = P3^0;
sbit EN = P3^1;

// Sensors
sbit S1 = P1^0;   // Entry
sbit S2 = P1^1;   // Exit

// LED (instead of buzzer)
sbit LED = P3^7;

unsigned int count = 0;
#define LIMIT 5   // Max capacity

// Delay
void delay(unsigned int ms)
{
    unsigned int i,j;
    for(i=0;i<ms;i++)
        for(j=0;j<1275;j++);
}

// LCD Command
void lcd_cmd(unsigned char cmd)
{
```

```
    RS = 0;
    P2 = cmd;
    EN = 1;
    delay(2);
    EN = 0;
}

// LCD Data
void lcd_data(unsigned char dat)
{
    RS = 1;
    P2 = dat;
    EN = 1;
    delay(2);
    EN = 0;
}

// LCD String
void lcd_string(char *str)
{
    while(*str)
        lcd_data(*str++);
}

// LCD Init
void lcd_init()
{
    lcd_cmd(0x38);
    lcd_cmd(0x0C);
    lcd_cmd(0x06);
    lcd_cmd(0x01);
}

// Display count
```

```
void display_count()
{
    lcd_cmd(0x80);
    lcd_string("Visitors:␣␣␣␣␣");

    lcd_cmd(0xC0);
    lcd_data((count/100)+'0');
    lcd_data(((count/10)%10)+'0');
    lcd_data((count%10)+'0');
}

// Display FULL
void display_full()
{
    lcd_cmd(0x01);
    lcd_cmd(0x80);
    lcd_string("␣␣ROOM␣FULL␣␣␣");
}

// MAIN
void main()
{
    lcd_init();

    lcd_string("Visitor␣Counter");
    delay(2000);
    lcd_cmd(0x01);

    while(1)
    {
        // ENTRY
        if(S1 == 0)
        {
            delay(50);
```

```
            if(S1 == 0)
            {
                if(count < LIMIT)
                    count++;

                while(S1 == 0);
            }
        }

        // EXIT
        if(S2 == 0)
        {
            delay(50);
            if(S2 == 0)
            {
                if(count > 0)
                    count--;

                while(S2 == 0);
            }
        }

        // LIMIT CHECK
        if(count == LIMIT)
        {
            display_full();
            LED = 1;
        }
        else
        {
            LED = 0;
            display_count();
        }
    }
```

```
}
```

Listing A.1: 8051 Visitor Counter Program