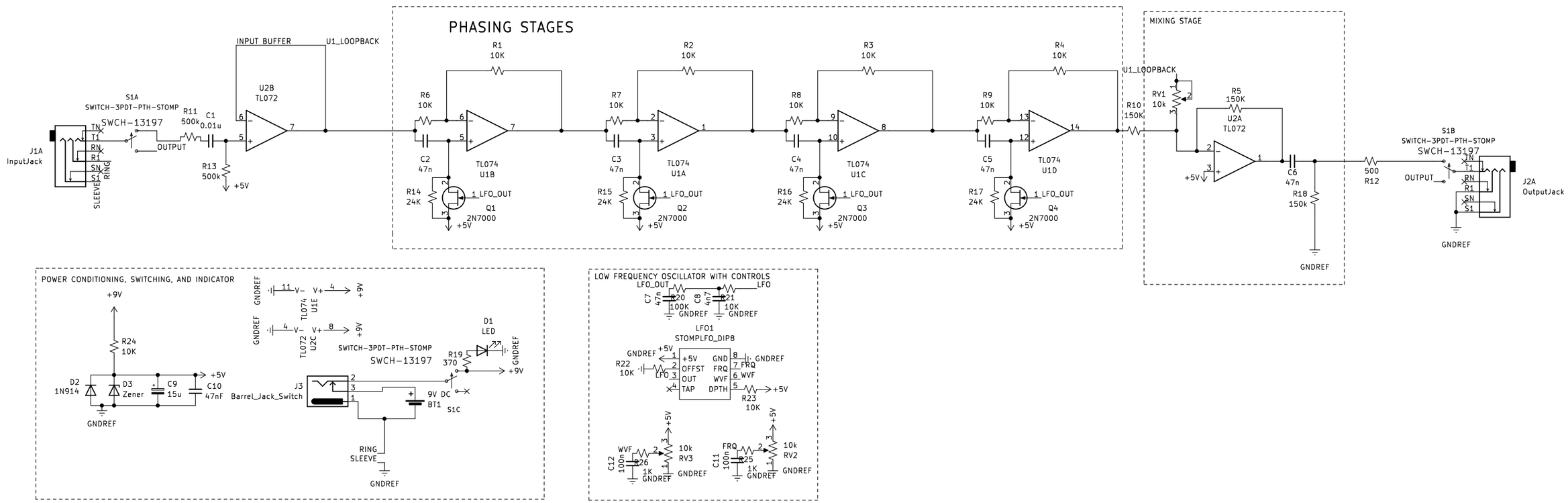
PHASING STAGES
MIXING STAGE
INPUT BUFFER
U1_LOOPBACK
J1A
InputJack
S1A
SWITCH-3PDT-PTH-STOMP
SWCH-13197
TN
T1
RN
R1
SN
S1
SLEEVE
RING
OUTPUT
R11
500k
C1
0.01u
R13
500k
+5V
U2B
TL072
R1
10K
R2
10K
R3
10K
R4
10K
R6
10K
R7
10K
R8
10K
R9
10K
C2
47n
C3
47n
C4
47n
C5
47n
TL074
U1B
TL074
U1A
TL074
U1C
TL074
U1D
R14
24K
R15
24K
R16
24K
R17
24K
LFO_OUT
Q1
Q2
Q3
Q4
2N7000
R10
150K
RV1
10k
R5
150K
U2A
TL072
C6
47n
R18
150k
500
R12
S1B
SWITCH-3PDT-PTH-STOMP
SWCH-13197
OUTPUT
J2A
OutputJack
GNDREF
POWER CONDITIONING, SWITCHING, AND INDICATOR
+9V
R24
10K
D2
1N914
D3
Zener
C9
15u
C10
47nF
TL074
U1E
TL072
U2C
SWITCH-3PDT-PTH-STOMP
SWCH-13197
D1
LED
R19
370
J3
Barrel_Jack_Switch
9V DC
BT1
S1C
RING
SLEEVE
LOW FREQUENCY OSCILLATOR WITH CONTROLS
LFO_OUT
LFO
C7
47n
R20
100K
C8
4n7
R21
10K
LFO1
STOMPLFO_DIP8
+5V
OFFST
OUT
TAP
GND
FRQ
WVF
DPTH
R22
10K
R23
10K
C12
100n
R26
1K
RV3
10k
C11
100n
R25
1K
RV2
10k