imports

comm::*
datatypes::*
pump::*
fire::*

Aim

Gimbal
GIMBAL_FLOOD_DELAY: nat
angle: nat
GimbalSprayEvents

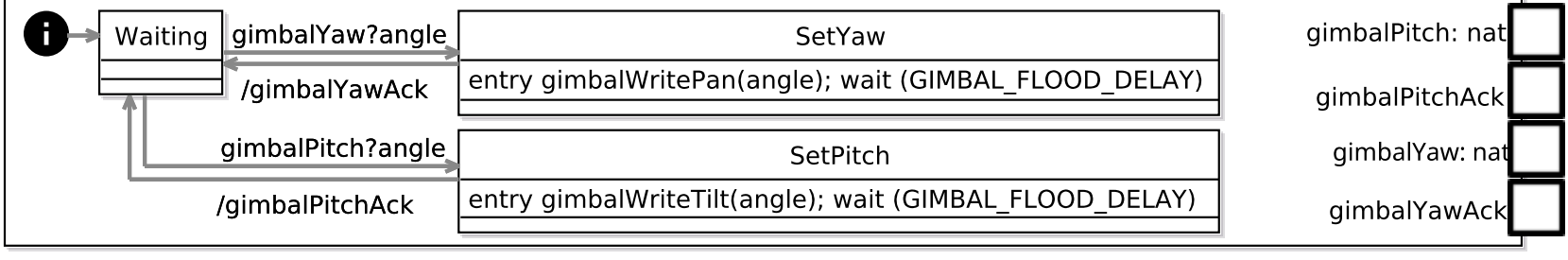

Spray

Pump
SprayPlanningEvents

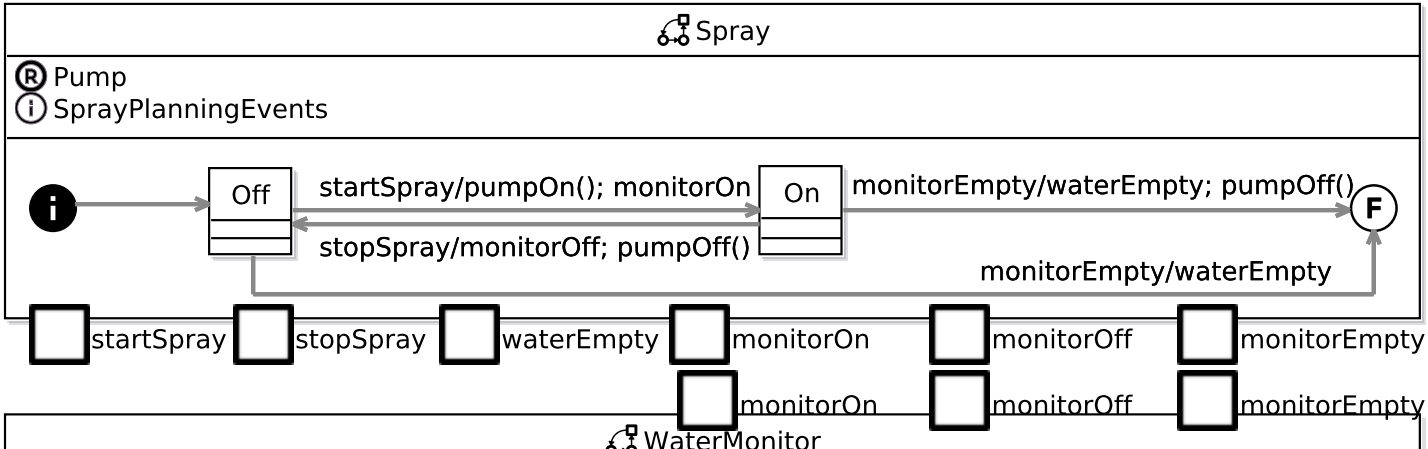

WaterMonitor
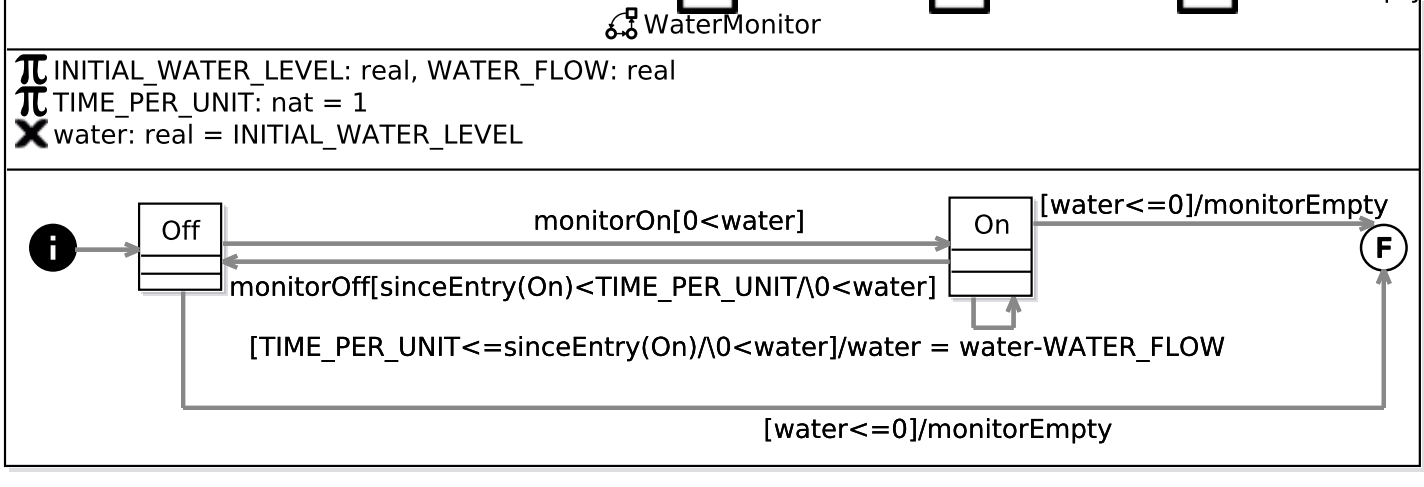
INITIAL_WATER_LEVEL: real, WATER_FLOW: real
TIME_PER_UNIT: nat = 1
water: real = INITIAL_WATER_LEVEL