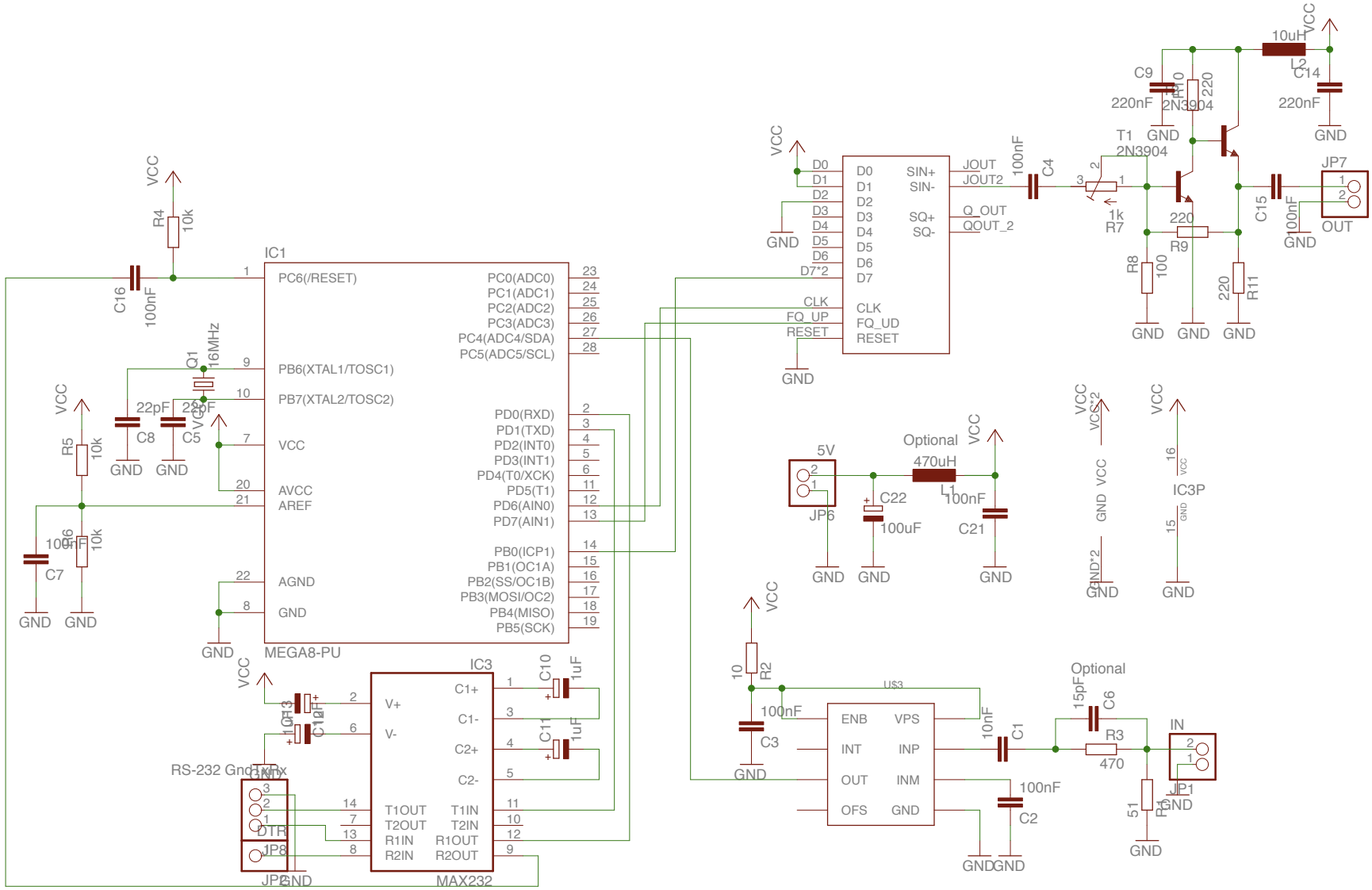
IC1
MEGA8-PU
PC6(/RESET)
PB6(XTAL1/TOSC1)
PB7(XTAL2/TOSC2)
VCC
AVCC
AREF
AGND
GND
PC0(ADC0)
PC1(ADC1)
PC2(ADC2)
PC3(ADC3)
PC4(ADC4/SDA)
PC5(ADC5/SCL)
PD0(RXD)
PD1(TXD)
PD2(INT0)
PD3(INT1)
PD4(T0/XCK)
PD5(T1)
PD6(AIN0)
PD7(AIN1)
PB0(ICP1)
PB1(OC1A)
PB2(SS/OC1B)
PB3(MOSI/OC2)
PB4(MISO)
PB5(SCK)
Q1 16MHz
C16 100nF
R4 10k
R5 10k
R6 10k
C7 100nF
C8 22pF
C5 22pF
IC3
MAX232
V+
V-
C1+
C1-
C2+
C2-
T1OUT
T2OUT
R1IN
R2IN
T1IN
T2IN
R1OUT
R2OUT
C10 1uF
C11 1uF
C13 1uF
C12 1uF
RS-232 Gnd Rx
DTR
JP8
JP2
D0
D1
D2
D3
D4
D5
D6
D7*2
CLK
FQ_UP
RESET
SIN+
SIN-
SQ+
SQ-
JOUT
JOUT2
Q_OUT
QOUT_2
C4 100nF
R7 1k
T1 2N3904
R10 220
C9 220nF
R8 100
R9 220
R11 220
C15 100nF
JP7
OUT
L2 10uH
C14 220nF
JP6
5V
Optional
L1 470uH
C22 100uF
C21 100nF
VCC*2
GND*2
IC3P
R2 10
C3 100nF
US3
ENB
INT
OUT
OFS
VPS
INP
INM
GND
C1 10nF
C2 100nF
Optional
C6 15pF
R3 470
IN
JP1
R1 51