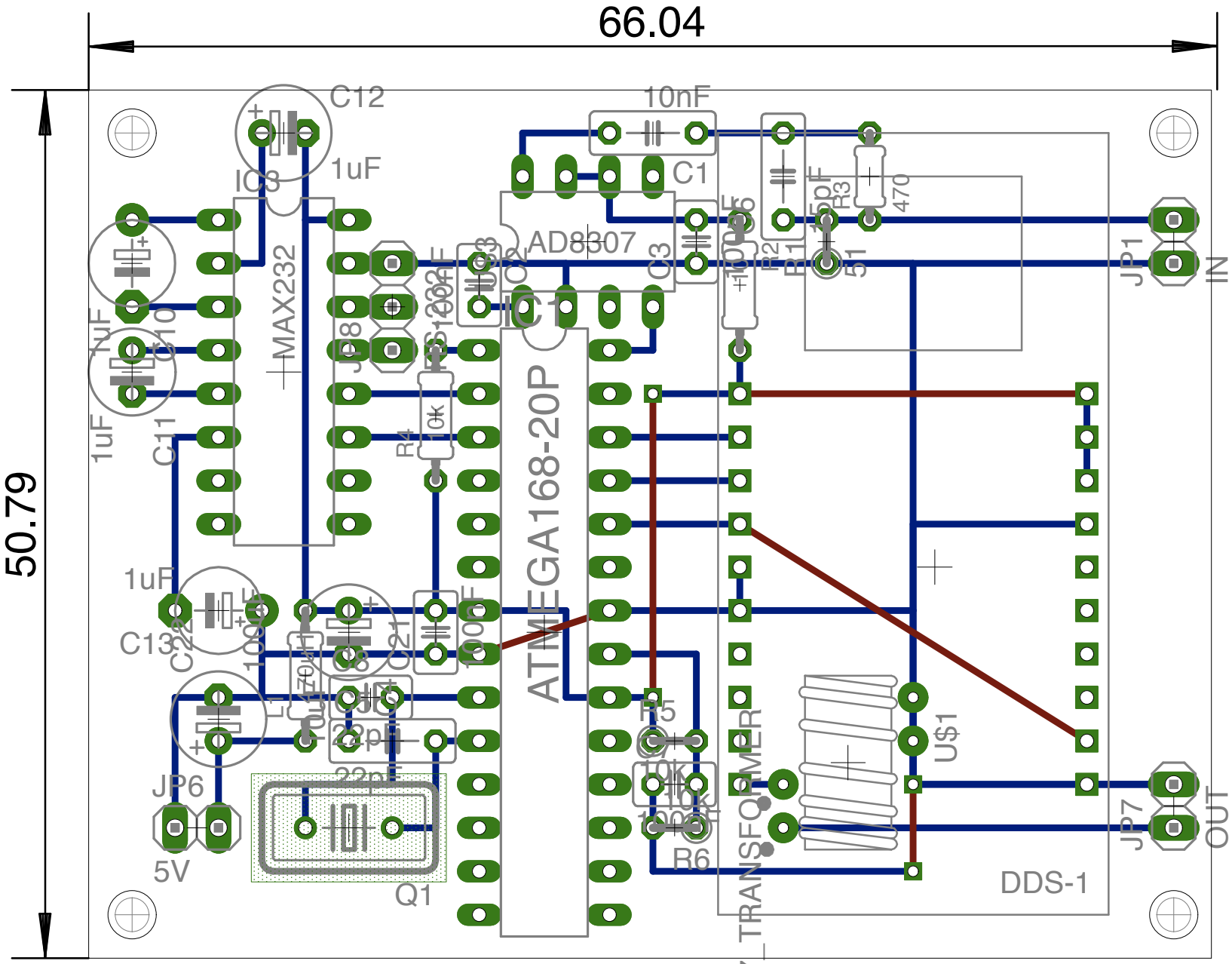

Fits into TEKO 2/A
conrad 520020