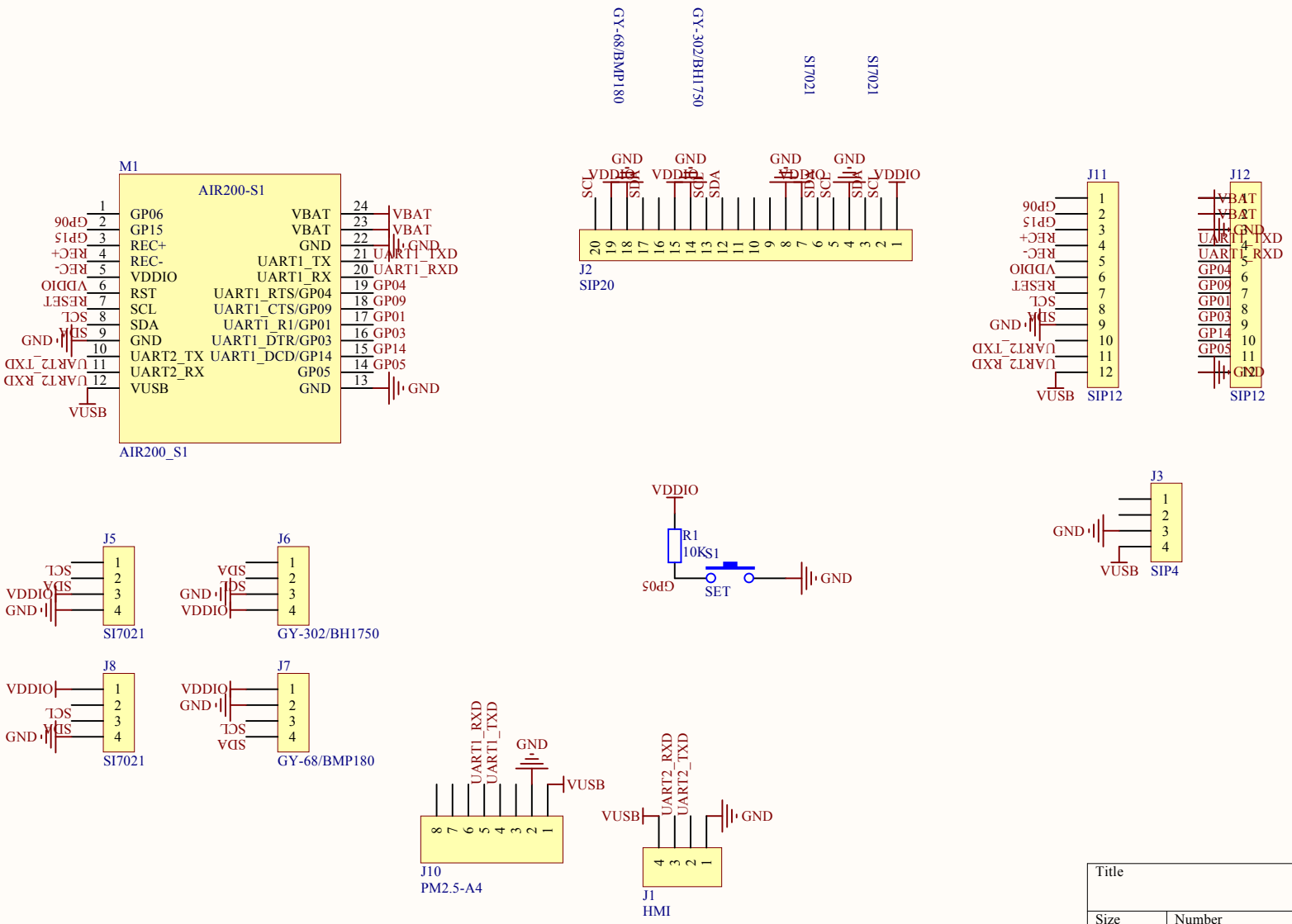

Title		
Size A4	Number	Revision
Date: 2017/8/28		Sheet of
File: C:\电子\..\lw-skit.SchDoc		Drawn By:

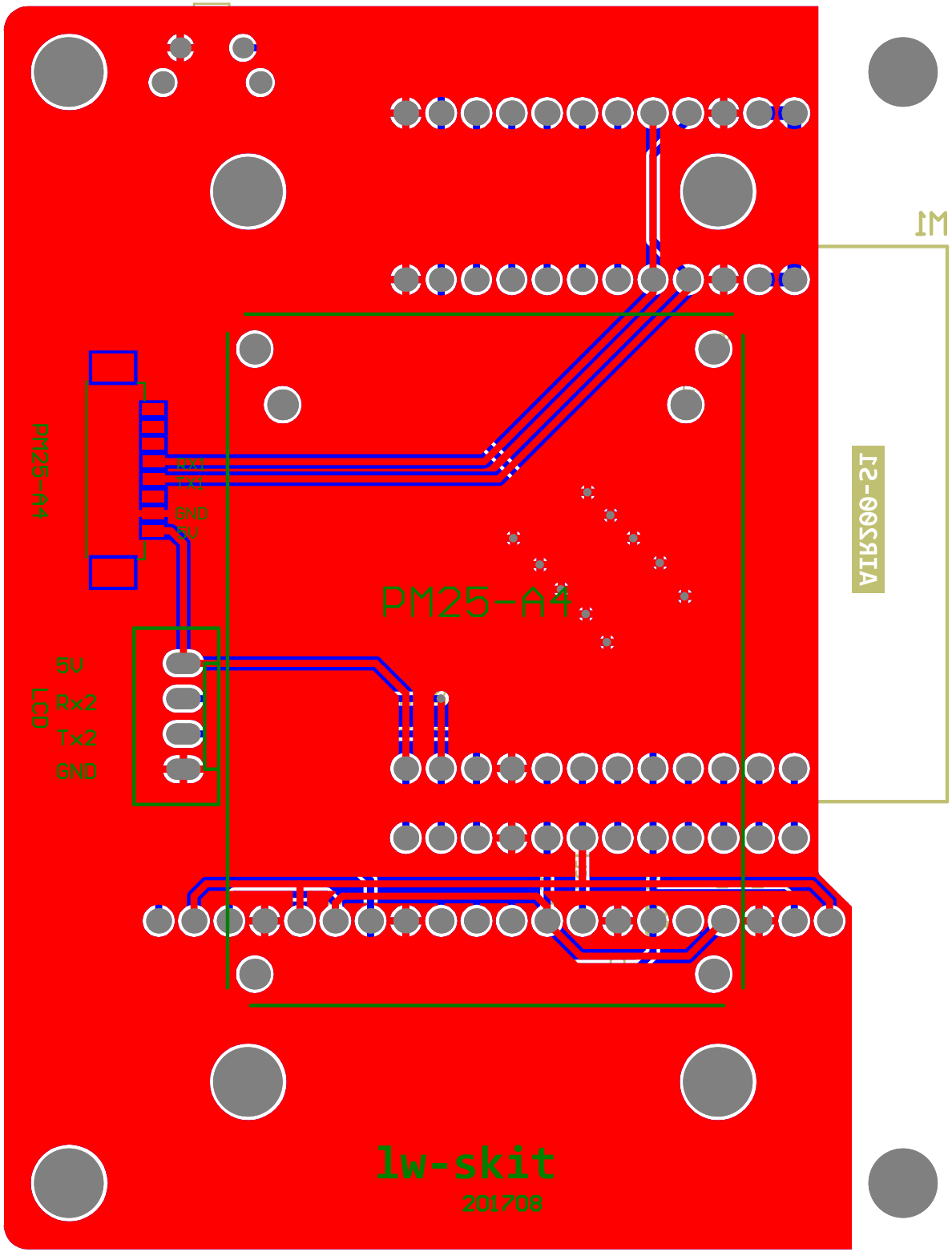
M1
JS-00AIA
PM25-A4
Rx1
Tx1
GND
5V
PM25-A4
5V
Rx2
Tx2
GND
LCD
lw-skit
201708