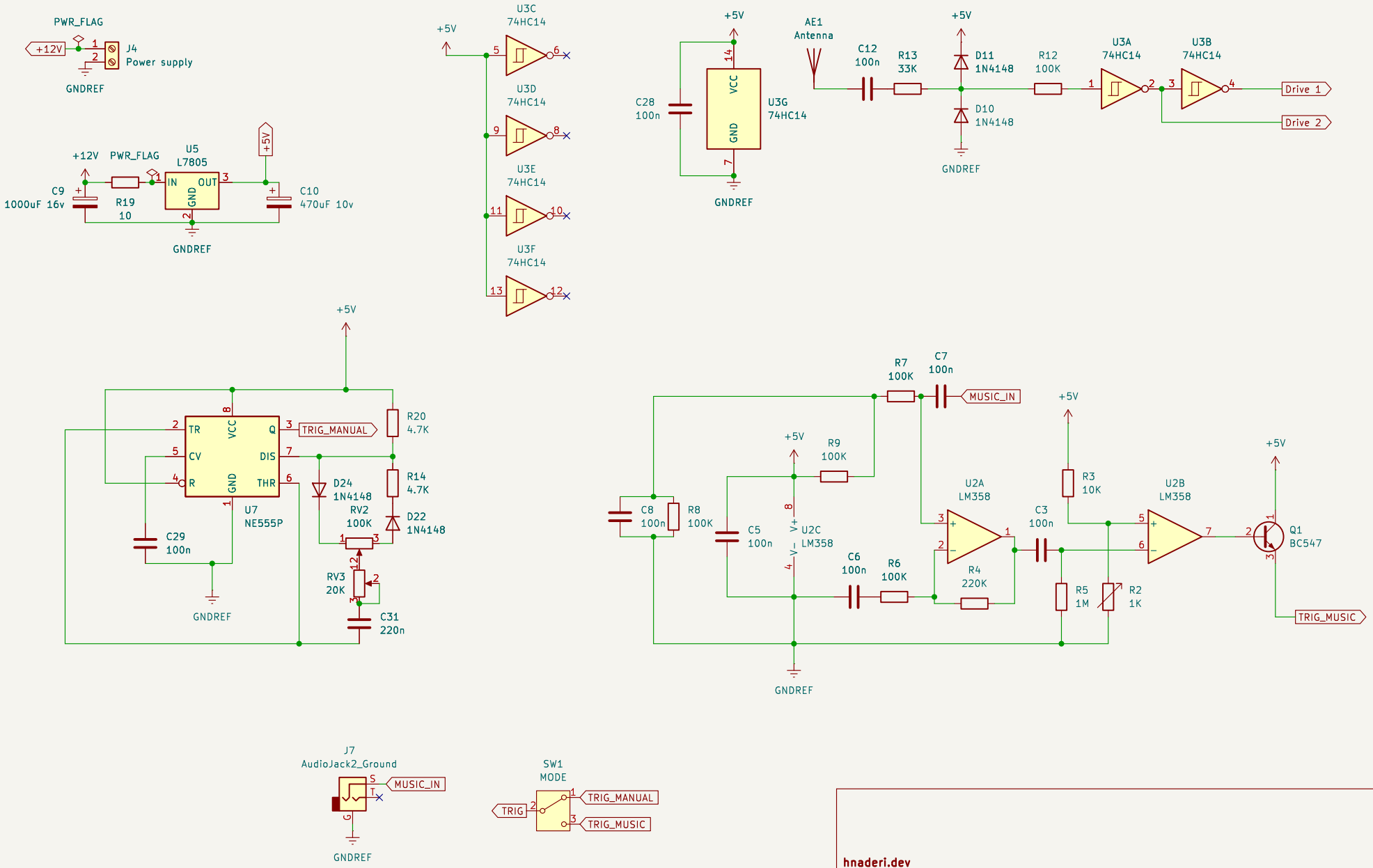

hnaderi.dev

Sheet: /

File: sstc.kicad_sch

Title: Hossein's musical SSTC

Size: A4	Date: 2024-08-23	**Rev: 1**
KiCad E.D.A. 8.0.6		Id: 1/2

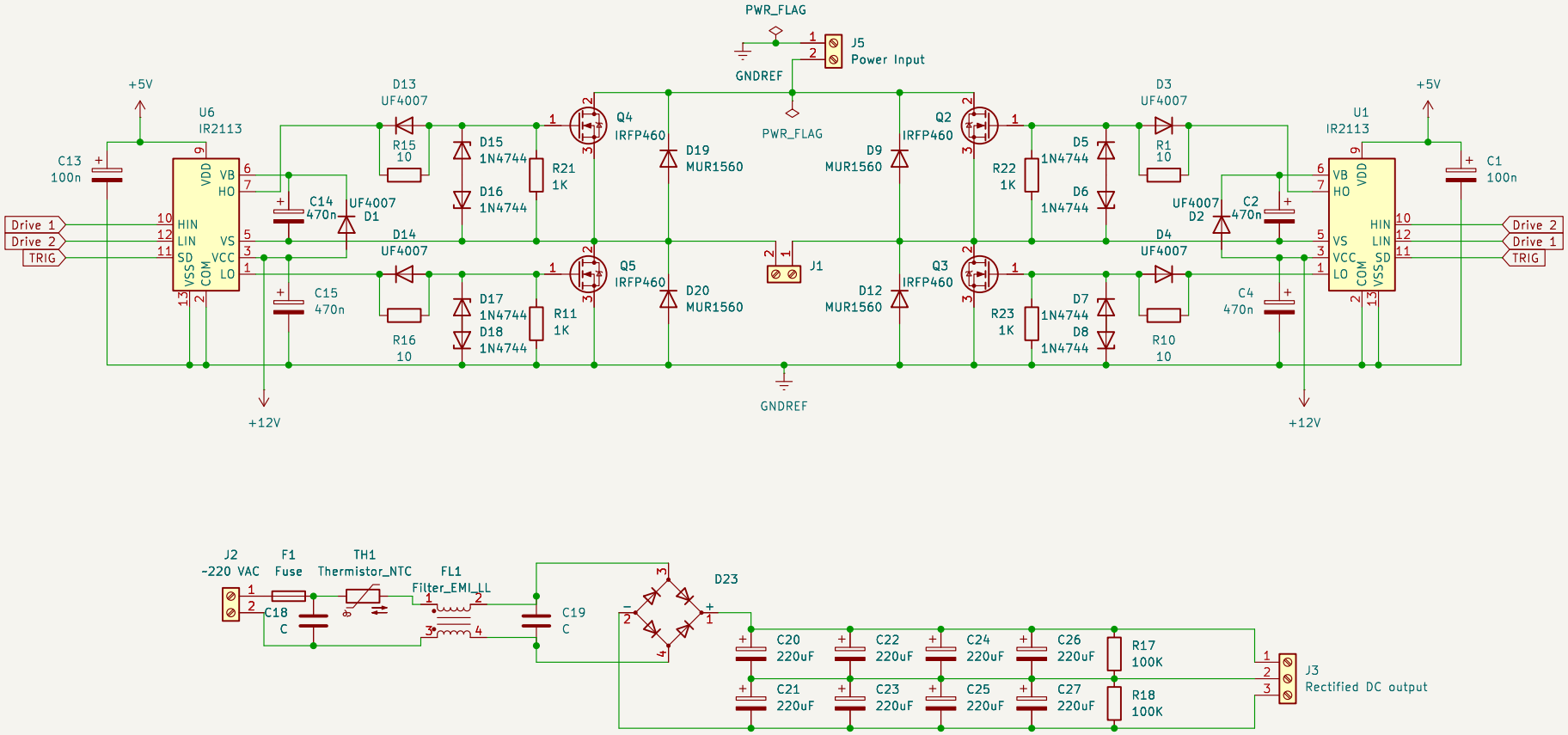

hnaderi.dev

Sheet: /full-bridge-driver/
File: full-bridge.kicad_sch

Title: Hossein's musical SSTC

Size: A4	Date: 2024-08-23	**Rev: 1**
KiCad E.D.A. 8.0.6		Id: 2/2