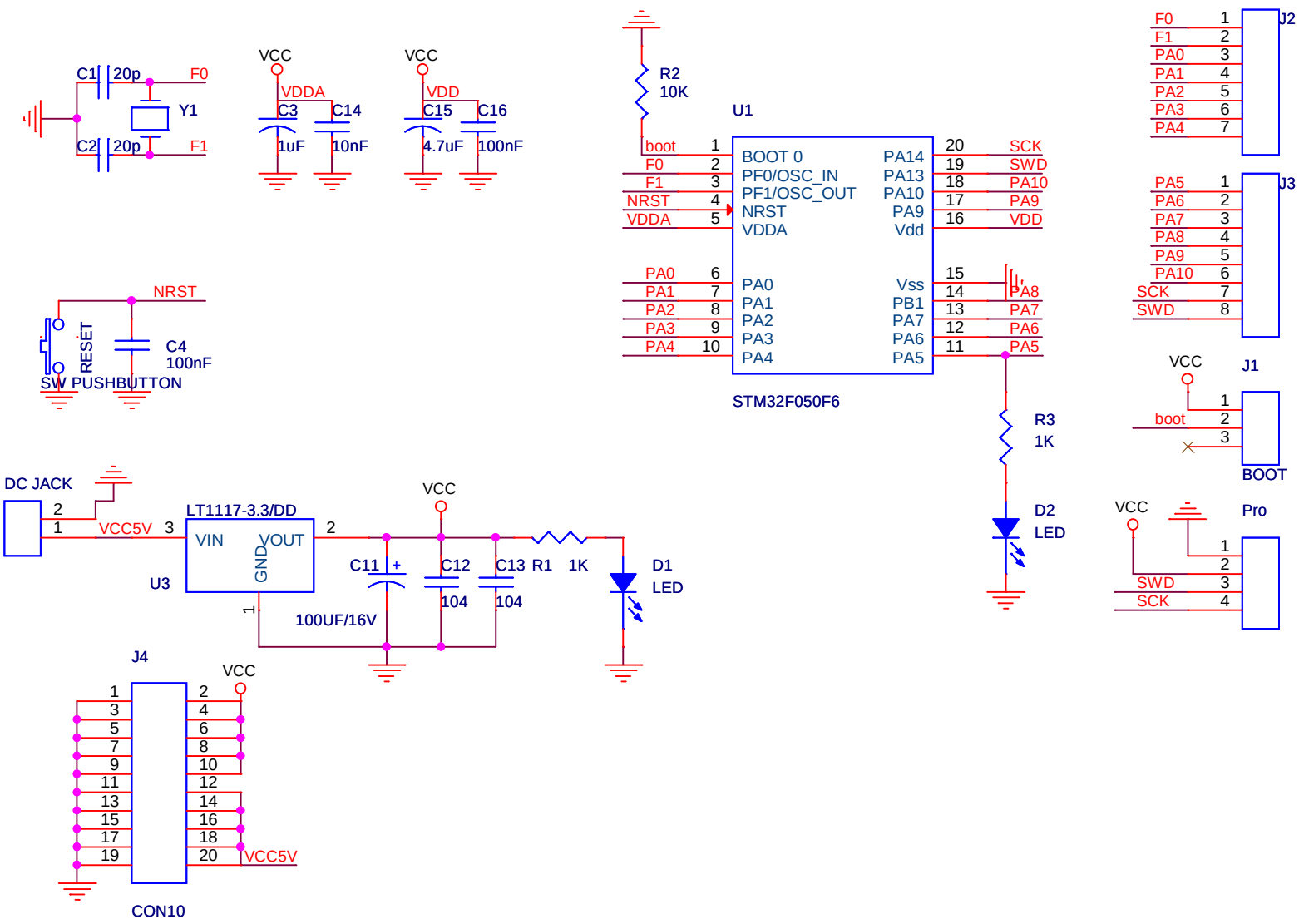

Title <Title>		
Size A	Document Number <Doc>	Rev <RevCode>
Date: Wednesday, August 28, 2013	Sheet 1 of 1	