MODULE 2: INSIDE THE SYSTEM

Learning objectives.

In this module you will:

* Learn about the structure and functions of the CPU.
* Learn how to distinguish between RAM and ROM.
* Learn about how memory is measured.
* Learn and use relative pronouns.
* Learn how to enquire about computers in a shop.
* Learn how to understand the technical specs of different computers.

UNIT 3: THE CENTRAL PROCESSING UNIT (CPU)

3.1 Technical specifications.

A. Read the advertisement and translate the technical specifications into your own language.

B. In pairs, answer these questions. If necessary, look at the Glossary.

1. What is the main function or a computer's processor?
2. What unit of frequency is used to measure processor speed?
3. What does RAM stand for?

3.2 What is inside a PC system?

A. Read the extract "What is inside a PC" below and then answer these questions.

1. What are the three main parts of the CPU?
2 . What does ALU stand for? What does it do?
3 . What is the function of the system clock?
4 . How much is one gigahertz?
5 . What type of memory is temporary?

6 . What type of memory is permanent and includes instructions needed by the CPU?

7 . How can RAM be increased?

8 . What technical term is used to refer to the main printed circuit board?

9 . What is a bus?

10. What is the benefit of having expansion slots?

B . Look at the extract again . What do the words in bold refer to?

1 This is built into a single chip (line 2)

2... **which** executes program instructions and coordinates ... (line 2)

3... **that** is being executed.(line 15)

4…performance of a computer is partly determined by the speed of **its** processor.(line17)

5.... the CPU looks for **it** on the hard disk (line 24)

6.... inside the computer to communicate with **each other**. (line 34)

What is inside a PC?

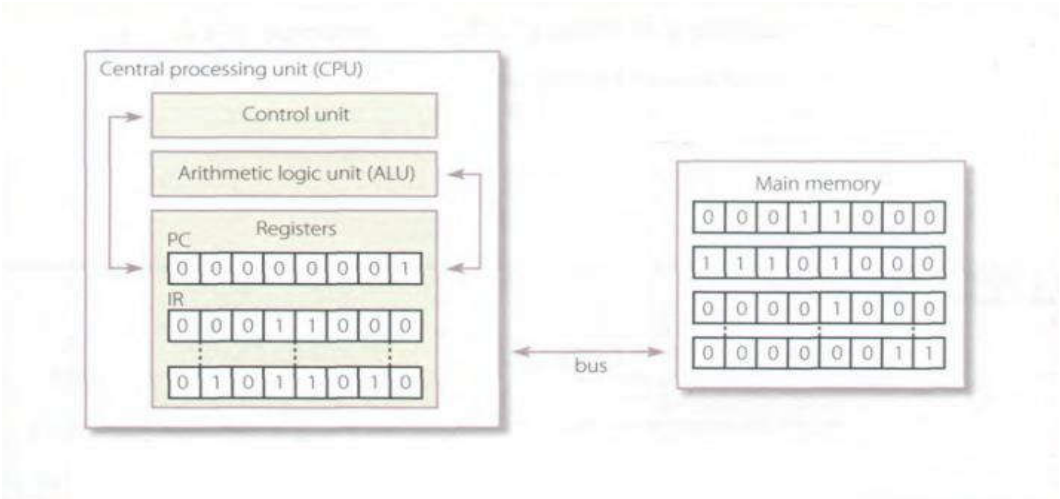

Fig 1: Organization of a simple computer, the CPU is built into a single microprocessor chip

▪ **Processing**

The nerve centre of a PC is the **processor**, also called the **CPU**, or **central processing unit**. **This** is built into a single **chip which** executes program instructions and coordinates the activities that take place within the computer system. The chip itself is a small piece of silicon with a complex electrical circuit called an **integrated circuit.**

The **processor** consists of three main parts:

▪The **control unit** examines the instructions in the user's program, interprets each instruction and causes the circuits and the rest of the components - *monitor, disk drives, etc*. - to execute the functions specified.

▪The **arithmetic logic unit (ALU)** performs mathematical calculations (+, -, x, : etc.) and logical operations (AND, OR, NOT).

▪The **registers** are high-speed units of memory used to store and control data. One of the registers (the program counter, or PC) keeps track of the next instruction to be performed in the main memory. The other (the instruction register, or IR) holds the instruction **that** is being executed .

▪The power and performance of a computer is partly determined by the speed of **its** processor. A **system clock** sends out signals at fixed intervals to measure and synchronize the flow of data. **Clock speed** is measured in **gigahertz(GHz)**. For example, a CPU running at 4GHz (four thousand million hertz, or 30 cycles per second) will enable your PC to handle the most demanding applications.

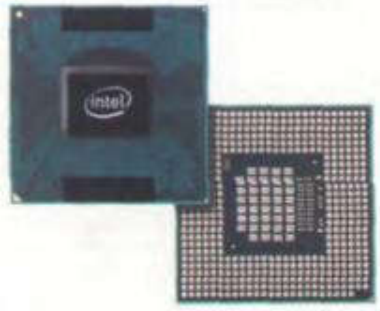

The Intel Core 2 Duo processor; Other chip manufactures are ADM & Motorola

RAM and ROM

The programs and data which pass through the processor must be loaded into the main memory in order to be processed. Therefore, when the user runs a program, the CPU looks for **it** on the hard disk and transfers a copy into the **RAM** chips. RAM (**random access memory**) is volatile - that is, its information is lost when the computer is turned off. However, **ROM** (**read only memory)** is non-volatile, containing instructions and routines for the basic operations of the CPU. The **BIOS** (**basic input/output system**) uses ROM to control communication with peripherals.

RAM capacity can be expanded by adding extra chips, usually contained in small circuit boards called dual in-line memory modules (**DIMMs)**.

A RAM chip

Buses and cards

The main circuit board inside your system is called the **motherboard** and contains the processor, the memory chips, expansions slots, and controllers so for peripherals, connected by **buses** - electrical channels which allow devices inside the computer to communicate with **each other.** For example, the front side bus carries all data that passes from the CPU to other devices.

The size of a bus, called **bus width**, determines how much data can be transmitted. It can be compared to the number of lanes on a motorway - the larger the width, the more data can travel along the bus. For example, a 64-bit bus can transmit 64 bits of data. **Expansion slots** allow users to install **expansion cards**, adding features like sound, memory and network capabilities.

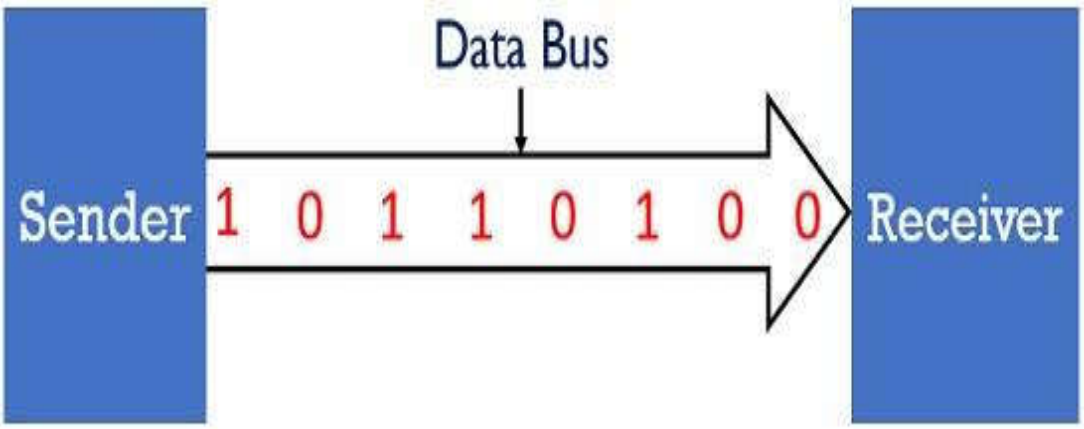

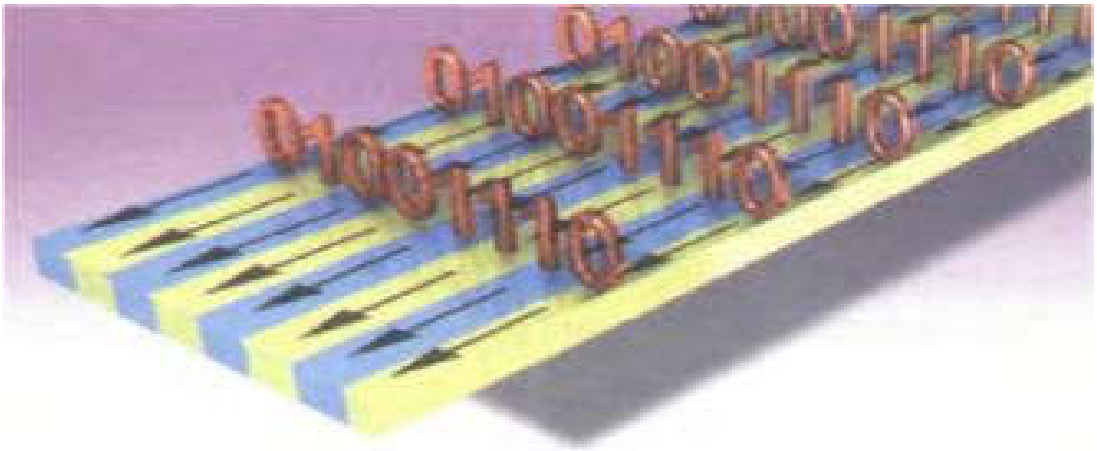

A data bus

(Source: Infotech – English for computer users -Forth edition).

3.3 Language work

A. Look at the HELP box below and then complete the following sentences with suitable relative pronouns. Give alternative options if possible. Put brackets round the relative pronouns you can leave out.

1 That's the computer_____I'd like to buy
2 .Core 2 Duo is a new Intel processor _____contains about 291 million transistors.
3 .A webmaster is a person_____ designs, develops and maintains a website.
4 A bus is an electronic pathway_____carries signals between computer devices.
5 Here's the DVD_____ you lent me!
6 Last night I met someone_____ works for GM as a software engineer.

HELP BOX
Defining relative clauses ●We can define people or things with a defining (restrictive) relative clause. We use the relative pronoun **who** to refer to a person; we can also use **that**. *A blogger is a person **who/that** keeps a web log (blog) or publishes an online diary.* ●We use the relative pronoun **which** (or **that**) to refer to a thing, not a person. *This is built into a single chip **which/that** executes program instructions and coordinates the activities that take place within the computer system.* ●Relative pronouns can be left out when they are the object of the relative clause. *The main circuit board (**which/that**) you have inside your system is called the motherboard...*

3.4 How memory is measured?

A Read the text below and then answer the following questions.

1.How many digits does a binary system use?
2.What is a bit?
3.What is a collection of eights bits called?
4.What does ASCII stand for?
5.What is the purpose of ASCII?

Bits and bytes

Computers do all calculations using a code made of just two numbers - 0 and 1. This system is called binary code. The electronic circuits in a digital computer detect the difference between two states: ON (the current passes through) or OFF (the current doesn't pass through) and represent these states as 1 or 0. Each 1 or 0 is called a binary digit, or bit. Bits are grouped into eight-digit codes that typically represent characters (letters, numbers and symbols). Eight bits together are called a byte. Thus, each character on a keyboard has its own arrangement of eight bits. For example, 01000001 for the letter A, 01000010 for B. and 01000011 for C.

Computers use a standard code for the binary representation of characters. This is the American Standard Code for Information Interchange, or ASCII - pronounced /'æski/. In order to avoid complex calculations of bytes, we use bigger units such as kilobytes, megabytes and gigabytes. We use these units to describe the RAM memory, the storage capacity of disks and the size of a program or document.

Note: bit is pronounced /bit/, byte is pronounced /bait/

Unit of memory	**Abbreviation**	
Binary digit	Bit, b	1 or 0
Byte	B	8 bits
Kilobyte	KB or K	1,024 bytes (2^{10})
Megabyte	MB	1,024 KB, or 1,048,576 bytes (2^{20})
Gigabyte	GB	1,024 MB, of 1,073,741,824 bytes (2^{30})
Terabyte	TB	1,024 GB, or 1,099.511,627,776 bytes (2^{40})

(Source: Infotech – English for computer users -Forth edition).

B Complete these descriptions with the correct unit of memory.

1 A _____is about one trillion bytes - about as much text as the books and magazines in a huge library.

2 A _____is about one million bytes - about as much text as a 300-page novel.

3 A _____is about one thousand bytes - equivalent to one sheet of A4.

4 A _____is about one billion bytes - about as much text as 1,000 books.

5 A _____can store a single character, such as the letter h or number 7.

3.5 .Consolidation

3.5.1. Complete this diagram of a PC system. Look at Unit 1, Unit 2 to help you.

A PC system

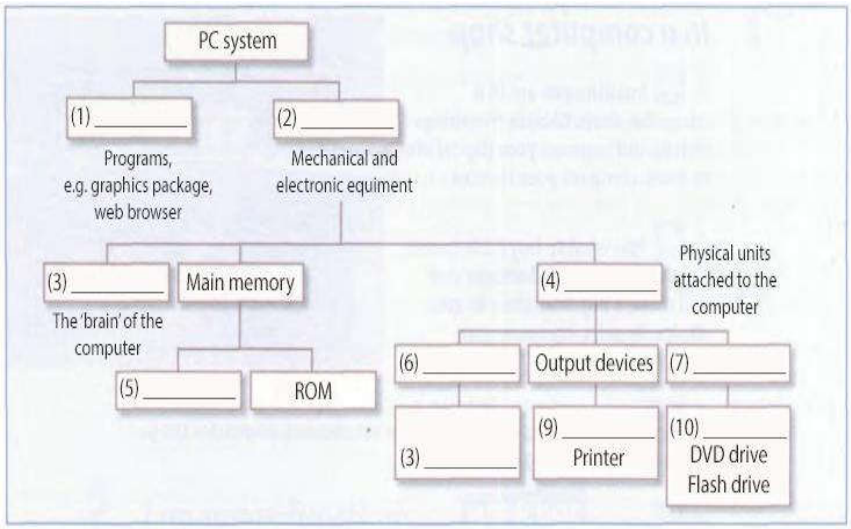

3.5.2. Choose the best answer to complete the following sentences.

1. Everything computer does is controlled by its……..?

A. RAM

B. ROM

C. CPU

D. Storage devices

2. Processors of all computers, whether micro, mini or mainframe must have…..

A .ALU

B. Primary storage

C. Control Unit

D. All of the above

3. The CPU clock speed is normally expressed in……

A. Ticks per second

B. Megahertz

C. 500 MHz

D. Bits per clock tick

4. The brain of any computer system is……

A. ALU

B. Memory

C. CPU

D. Control unit

5. Which kind of hardware is used the most in the input phase of a computer based information system?

A. Keyboard

B. Printer

C. Monitor

D. Hard disk

6. A tablet PC looks like a book with an LCD screen …….. you can write using a special digital pen.

A. for which

B. at which

C. by which

D. on which

7. The computer stores its program and data in its……

A. ALU

B. Control unit

C. Memory

D. Cache memory

8. Which can read data and convert them to a form that a computer can use?

A. Output device

B. Storage

C. Control

D. Logic

9. To turn on the computer, ……..the "Start" button.

A. switch

B. touch

C. press

D. turn

10. Control Unit of a digital computer is often called the……..

A. Lock

B. Nerve centre

C. ICs

D. All of the above

11. The control unit of a processor..... the flow of information between the arithmetic unit and the memory.

A. Coordination

B. Coordinator

C. Coordinating

D. Coordinates

12. Which of the following is responsible for coordinating various operations using timing signals?

A. Arithmetic-logic Unit

B. Control unit

C. Memory unit

D. Input/output unit

13. Computer memory consists of…….

A. RAM

B. ROM

C. PROM

D. All of the above

14. …….. is volatile, so it doesn't retain data when the power is off.

A. RAM(Random Access Memory)

B. Flash memory

C. Memory

D. Temporary

15. ……..consists of instruction executed by a computer, as opposed to the physical device on which they run.

A. Software
B. Hardware
C. Hard drive
D. Ports

3.5.3 Fill in each blank with ONE suitable word or phrase from the table .

physical	***properly***	***expansion***	***ALU***	***connected***
any	***some***	***peripherals***	***microprocessor***	***gates***
ports	***peripheral***	***driver***	***drive***	***portable***

Hardware includes any(1)…….device that is connected to your computer and is controlled by your computer's(2)……..This includes equipment that was(3)…..…..to your computer when it was manufactured, as well as(4)…..….equipment that you added later. Modems, disk drives, CD-ROM drives, printers, network adapters, keyboards and display adapter cards are all examples of devices.

Devices can be connected to your computer in several ways. Some devices, like network adapters and sound cards are connected to(5)…….. inside your computers. Other devices, like printers and scanners, are connected to(6)…….. on the outside your computers. Some devices, known as PC Cards, connect only to PC Card slots on a(7)…….computer.

For a device to work (8)……with Windows 2000, software known as a device(9)…… must be loaded onto the computer. Each device has its own unique device driver, which is typical supplied by the device manufacturer. However(10)…….. device drivers are included with Windows 2000.

(Source: Oxford English for Information Technology)

3.5.4. Translate the following passage into Vietnamese.

Let us take a look at the history of the computer that we know today. The very first calculating device used was the ten fingers of a man's hands. This, in fact, is why today we still count in tens and multiples of tens. Then the abacus was invented, a bead frame in which the beads are moved from left to right. People went on using some form of abacus well into the 16th century, and it is still being used in some parts of the world because it can be understood without knowing how to read.

During the 17th and 18th centuries many people tried to find easy ways of calculating. J.Napier, a Scotsman, devised a mechanical way of multiplying and dividing, which is how the modem slide rule works. Henry Briggs used Napier's ideas to produce logarithm tables which all mathematicians use today. Calculus, another branch of mathematics, was independently invented by both Sir Isaac Newton, an Englishman, and Leibnitz, a German mathematician.

The first real calculating machine appeared in 1820 as the result of several people's experiments. This type of machine, which saves a great deal of time and reduces the possibility of making mistakes, depends on a series of ten-toothed gear wheels. In 1830 Charles Babbage, an Englishman, designed a machine that was called "The Analytical Engine". This machine, which Babbage showed at the Paris Exhibition in 1855, was an attempt to cut out the human being altogether, except for providing the machine with the necessary facts about the problem to be solved. He never finished this work, but many of his ideas were the basis for building today's computers.

In 1930, the first analog computer was built by an American named Vannevar Bush. This device was used in world war II to help aim guns. Mark I, the name given to the first digital computer, was completed in 1944. The men responsible for this invention were Professor Howard Aiken and some people from IBM. This was the first machine that could figure out long lists of mathematical problems, all at a very fast rate. In 1946 two engineers at the University of Pennsylvania, J. Eckert and J. Mauchly, built the first digital computer using parts called vacuum tubes. They named their new invention ENIAC. Another important advancement in computers came in 1947, when John Yon Newmann developed the idea of keeping instructions for the computer inside the computer's memory.

The first generation of computers, which used vacuum tubes, came out in 1950. Univac I is an example of these computers which could perform thousands of calculations per second. In 1960, the second generation of computers was developed and these could perform work ten times faster than their predecessors. The reason for this extra speed was the use of transistors instead of vacuum tubes. Second-generation computers were smaller, faster and more dependable than first-generation computers. The third-generation computers appeared on the market in 1965. These computers could do a million calculations a second, which is 1000 times as many as first generation computers.

Unlike second-generation computers, these are controlled by tiny integrated circuits and are consequently smaller and more dependable. Fourth-generation computers have now arrived, and the integrated circuits that are being developed have been greatly reduced in size. This is due to microminiaturization, which means that the circuits are much smaller than before; as many as 1000 tiny circuits now fit onto a single chip.

A chip is a square or rectangular piece of silicon, usually from 1/10 to 1/4 inch, upon which several layers of an integrated circuit are imprinted after which the circuit is encapsulated in plastic, ceramic or metal. Fourth-generation computers are 50 times faster than third - generation computers and can complete approximately 1,000,000 instructions per second. At the rate computer technology is growing, today's computers

might be obsolete by 1985 and most certainly by 1990. It has been said that if transport technology had developed as rapidly as computer technology, a trip across the Atlantic Ocean today would take a few seconds.

(Source: English for computer science, Nhà xuất bản thống kê)

3.6. Vocabulary

Specification	(n)	Thông số kĩ thuật
Processor	(n)	Bộ vi xử lý
Intergrate	(v)	tích hợp
Control unit	(n)	bộ điều khiển, thiết bị điều khiển
Register	(n)	Thanh ghi
Operation	(n)	Phép tính, sự hoạt động
Synchronize	(v)	đồng bộ hóa
System clock	(n)	đồng hồ hệ thống
Capacity	(n)	dung lượng
Manufacture	(v)	sản xuất
Independently	(adv)	không phụ thuộc, một cách độc lập
figure out	(v)	tìm ra, phát hiện ra
predecessor	(n)	Thế hệ trước, phiên bản trước
microminiaturization	(n)	Công nghệ vi mạch điện tử.
rectangular	(n)	hình chữ nhật

MODULE 3: INPUT AND OUTPUT DEVICES

Learning objectives

In this module, you will:

* Describe input and output devices.
* Identify the different keys on a keyboard and explain their functions.
* Distinguish between facts and opinions in advertisements.
* Learn how to understand the technical specs of digital cameras, printers and display devices.
* Learn and use the superlative form of adjectives
* Practice recommending the most suitable display devices for particular people
* Learn how to understand and give instructions and advice for the use of computers and monitors.
* Compare different types of printer.
* Learn and use discourse connectors
* Learn about what sort of input/output devices that computer users can use.

UNIT 4. INPUT DEVICES

4.1 Interacting with your computer.

A. Read the following description of input devices and then label the pictures(1-8)

Input devices are the pieces of hardware which allow us to enter information into the computer. The most common are the **keyboard** and the **mouse**. we can also	Interact with a computer by using one of these: a **light pen**, a **scanner,** a **trackball**, a **graphics tablet**, a **game controller** or a **microphone**

1_____

2_____

3_____

4_____

5_____

6_____

7_____

8_____

(Source: Infotech – English for computer users -Forth edition).

4.2 Describing input devices

A. Read three computer technicians describing three input devices. Write which device he's talking about.

Technician 1: This device is used to enter information into the computer. As well as having normal typewriter keys for characters and a numeric keypad, it may also have function keys and editing keys for special purposes.

Technician 2: This is a device for controlling the cursor and selecting items on the screen. The ball underneath is rolled in any direction across the surface of a desk to move the cursor on the screen. It may have an optical sensor instead of a ball. It usually features two buttons and a wheel. By clicking a button, the user can activate icons or select items and text. A wireless version works without cables.

Technician 3: In shape, this input device is similar to an ordinary pen. It works by detecting light from the computer screen and is used by pointing it directly at the screen display. It allows the user to answer multiple-choice questions and to draw diagrams or graphics.

1 _____

2 _____

3 _____

B . Look at the Help box below, read again and complete the following extracts.

1. This device is _____ enter information into the computer.

2. It may also_____function keys and editing keys _____ special purposes.

3. This is a device _____the cursor and selecting items on the screen.

4. It usually _____two buttons and wheel.

5. The user_____activate icons or select items and text.

6. It_____detecting light from the computer screen and it used by pointing it directly at the screen display.

7. It _____the user_____answer multiple-choice questions and…….

4.3. Language work: Describing functions and features.

A. Look at the HELP BOX and then use the notes to write a description of the Sony PlayStation 3 controller.

Sony PlayStation 3 controller

Function

• Control video games

• Hold it with both hands, use thumbs to handle directional and face buttons

Features

• six-axis sensing system (capable of sensing motion in six directions: up, down, left, right, forwards and backwards)

• wireless controller (Bluetooth)

• USB mini port and cable for wires play and automatic battery charging

HELP BOX

Describing functions

In the reading part, the mouse was described using **for** + gerund:

*This is a device **for controlling** the cursor and selecting items on the screen.*

There are other ways of describing a device's function:

•**Used** + **to** + infinitive

*It's **used to control**...*

•Relative pronoun + verb

*This is a device **which controls** ...*

•Relative pronoun + **used** + **to** + infinitive

*This is a device **which/that** is **used to control** ...*

•**Work by** + gerund

*It **works by detecting** light from the computer screen.*

Describing features

We can describe features like this:

An optical mouse **has** an optical sensor instead of a ball underneath.

It usually **features** two buttons and a wheel.

You **can** connect it to a USB port.

A wireless mouse **work/operates** without cables.

It **allows** the user **to** answer multiple-choice questions and …

B. In pairs, choose one of these input devices and describe its functions and features. Try to guess which device your partner is describing.

Bar code reader

Touchpad on a portable

PC Webcam

Touchscreen

4.4 The keyboard

A. Label the picture of a standard keyboard with the groups of keys (1-5).

1. Cursor control keys include arrow keys that move the insertion point up, down, right and left, and keys such as *End, Home, Page down*, which are used in word processing to move around a long document.

2. Alphanumeric keys represent letters and number, as arranged on typewriter.

3. Function keys appear at the top of the keyboard and can be programmed to do special tasks.

4. Dedicated keys are used to issue commands or to produce alternative characters, e.g. the *Ctrl* key or the *Alt* key.

5. A **numeric keypad** appears to the right of the main keyboard. The *Num Lock* key is used to switch from numbers to editing keys.

A PC -compatible keyboard

B. Match the descriptions (1-8) with the names of the key (a-h). Then find them on the keyboard.

1. A long key at the bottom of the keyboard. Each time it is pressed, it produces a blank space. **2 .** It moves the cursor to the beginning of a new line. It is also used to confirm commands. **3.** It works in combination with other keys. For example, you press this key and *C* to copy the select text. **4.** It removes the character to the left of the cursor or any selected text. **5.** It produces UPPER CASE character. **6 .** It produces UPPER CASE letters, but it does not affect numbers and symbols. **7 .** It moves the cursor horizontally to the right for a fixed number of spaces (in tabulations and data fields). **8.** They are used to move the cursor, as an alternative to the mouse.	**a.** arrow keys **b.** return/enter **c.** Caps Lock **d.** shift **e.** tab **f.** space bar **g.** backspace . **h.** Ctrl

4.5. Mouse actions.

Complete this text about the mouse with verbs from the box below.

Click	**double-click**	**drag**	**grab**	**select**	**move**	**control**

MOUSE ACTIONS

A mouse allows you to (1)_____the cursor and move around the screen very quickly. Making the same movements with the arrow keys on the keyboard would take much longer. As you (2)_____the mouse on your desk, the pointer usually looks like and I-bar, an arrow, or a pointing hand, depending on what you are doing. A mouse

has one or more buttons to communicate with computer. For example, if you want to place the insertion point or choose a menu option, you just (3)_____(press and release) on the mouse button, and the option is chosen. The mouse is also used to (4)_____ text and items on the screen. You can highlight text to be deleted, copied or edited in some way. The mouse is widely used in graphics and design. When you want to move an image, you position the pointer on the object you want to move, press the mouse button, and (5)_____ the image to a new location on the screen. Similarly, the mouse is used to change the shape of a graphic object. For example, if you want to convert a square into a rectangle, you (6)_____one corner of the square and stretch it into a rectangle. The mouse is also used to start a program or open a document: you put the pointer on the file name and (7)_____ on the name- that is, you rapidly press and release the mouse button twice.

Source: Infotech – English for computer users -Forth edition).

4.6. Consolidation .

4.6.1 Choose the best answer

1. What is the best definition of 'mouse pointer'?

A. A special icon (normally an arrow) that indicates the current location of the mouse on the desktop screen.

B. To press the right-side mouse button

C. A hardware peripheral designed to 'scan' products into an inventory tracking system.

D. All the above

2. A pen shaped device which can sense light, and is used to point at spots on a video screen.

A. Mouse

B. Light pen

C. Joystick

D. Plotter

3. What is the best definition of 'input device'?

A. A handheld input device for computers with one or more buttons and a rounded body meant to be slid around on a pad or flat surface.

B. An input device or mouse alternative using a sensitive rectangular surface and a stylus

C. A peripheral used primarily to enter data into a computer

D. An input device using a light-sensitive pen shaped handle which can be used to draw on the computer screen

4. What is the best definition of 'speech recognition'?

A. The ability of a computer to convert spoken words from a user into usable data.

B. A handheld input device for computers with one or more buttons and a rounded body meant to be slid around on a pad or flat surface

C. An input device using a light-sensitive pen shaped handle which can be used to draw on the computer screen

D. A hardware device plugged into a computer's sound card optimized for voice commands or other audio recording

5. Data is transferred from the internal memory to the arithmetic –logical unit along..... known as buses.

A. cables

B. roads

C. paths

D. channels

6. What is the best definition of 'right-click'?

A. An input device using a light-sensitive pen shaped handle which can be used to draw on the computer screen

B. An input device or mouse alternative using a sensitive rectangular surface and a stylus

C. To press the right-side mouse button

D. An input device with a vertical rod mounted on a base used to control pointing devices or on-screen objects; normally with one or more buttons

7. Which device of computer operation dispenses with the use of the keyboard?

A. Mouse

B. Light pen

C. Joystick

D. Touch

8. The device that can both feed data into and accept data from a computer is.....

A. ALU

B. Input/Output device

C. CPU

D. All of the above

9. What is the best definition of 'barcode reader'?

A. an input device using a light-sensitive pen shaped handle which can be used to draw on the computer screen

B. an input device with a vertical rod mounted on a base used to control pointing devices or on-screen objects; normally with one or more buttons

C. a hardware peripheral designed to 'scan' products into an inventory tracking system

10. What is the best definition of 'microphone'?

A. to press the right-side mouse button

B. a display that also acts as an input device by allowing a user to navigate a program by touching specific locations of the screen

C. a hardware device plugged into a computer's sound card optimized for voice commands or other audio recording.

4.6.2 Fill in each blank with ONE suitable word or phrase from the table below. You may have to change the form of words to complete the passage.

main	***banks***	***libraries***	***tests***	***computer***
generate	***lives***	***quickly***	***graphics***	***barcode***

Computers are part of our everyday(1)…… They have an effect on almost everything you do. When you buy groceries at a supermarket, a(2)……is used with laser and (3)…… technology to scan the price of each item and present a total. Barcoding items (clothes, food and books) require a computer to(4)…….the barcode labels and maintain the inventory.

Most televisions advertisements and many films use (5)…….. produced by a computer. In hospitals, beside terminals connected to the hospitals(6)…… computers allow doctors to type in orders for blood(7)…….. and to schedule operations(8)….. use computers to look after their customers' money. In(9)…… and bookshops, computers can help you find the book you want as(10)…….as possible.

(*Source: Infotech – English for computer users -Second edition*).

4.6.3 Translate the following passage into Vietnamese.

Computers are machines designed to process, electronically, specially prepared pieces of information which are termed data. Handling or manipulating the information that has been given to the computer, in such ways as doing calculations, adding information or making comparisons is called processing. Computers are made up of millions of electronic devices capable of storing data or moving them, at enormous speeds, through complex circuits with different functions.

All computers have several characteristics in common, regardless of make or design. Information, in the form of instructions and data, is given to the machine, after which the machine acts on it, and a result is then returned. The information presented to the machine is the input; the internal manipulative operations, the processing; and the result, the output. These three basic concepts of input, processing, and output occur in almost every aspect of human life whether at work or at play. For example, in clothing manufacturing, the input is the pieces of cut cloth, the processing is the sewing together of these pieces, and the output is the finished garment

the fundamental hardware components in a computer system. The centerpiece is called either the computer, the processor, or usually, the central processing unit (CPU).

The term "computer" includes those parts of hardware in which calculations and other data manipulations are performed, and the high-speed internal memory in which data and calculations are stored during actual execution of programs. Attached to the CPU are the various peripheral devices such as card reader and keyboards (two common examples of input devices). When data or program need to be saved for long period of time, they are stored on various secondary memory devices of storage devices such a magnetic tapes or magnetic disks.

Computers have often been thought of as extremely large adding machines, but this is a very narrow view of their function. Although a computer can only respond to certain number of instructions, it is not a single-purpose machine since these instructions can be combined in an infinite number of sequences. Therefore, a computer has no known limit on the kinds of things it can do; its versatility is limited only by the imagination of those using it.

In the late 1950s and early 1960s when electronic computers of the kind in use today were being developed, they were very expensive to own and run. Moreover, their size and reliability were such that a large number of support personnel were needed to keep the equipment operating. This has all changed now that computing power has become portable, more compact, and cheaper.

In only a very short period of time, computers have greatly changed the way in which many kinds of work are performed. Computers can remove many of the routine and boring tasks from our lives, thereby leaving us with more time for interesting, creative work. It goes without saying that computers have created whole new areas of work that did not exist before their development.

(Source: Computing studies. Heinemann Education)

4.7 Vocabulary.

Trackball	(n)	chuột bi
Graphics tablet	(n)	bảng đồ họa
Game controller	(n)	Thiết bị điều khiển trò chơi điện tử
Character	(n)	kí tự
Numeric keypad	(n)	phím số
Cursor	(n)	con trỏ
Activate	(v)	kích hoạt
Cable	(n)	tuyến cáp
Detect	(v)	dò tìm
Point	(v)	chỉ
Diagram	(n)	biểu đồ
Arrow	(n)	mũi tên
Movement	(n)	sự chuyển động, động tác

Position	(n)	vị trí
Object	(n)	vật thể, đối tượng
Convert	(n)	chuyển đổi
Stretch	(v)	kéo dài
Circuit	(n)	mạch
Enormous	(adj)	to, lớn
Complex	(adj)	phức tạp
Fundamental	(adj)	chính, cơ bản
Versatility	(n)	sự đa tính năng
Imagination	(n)	sự tưởng tượng
Reliability	(n)	sự tin cậy