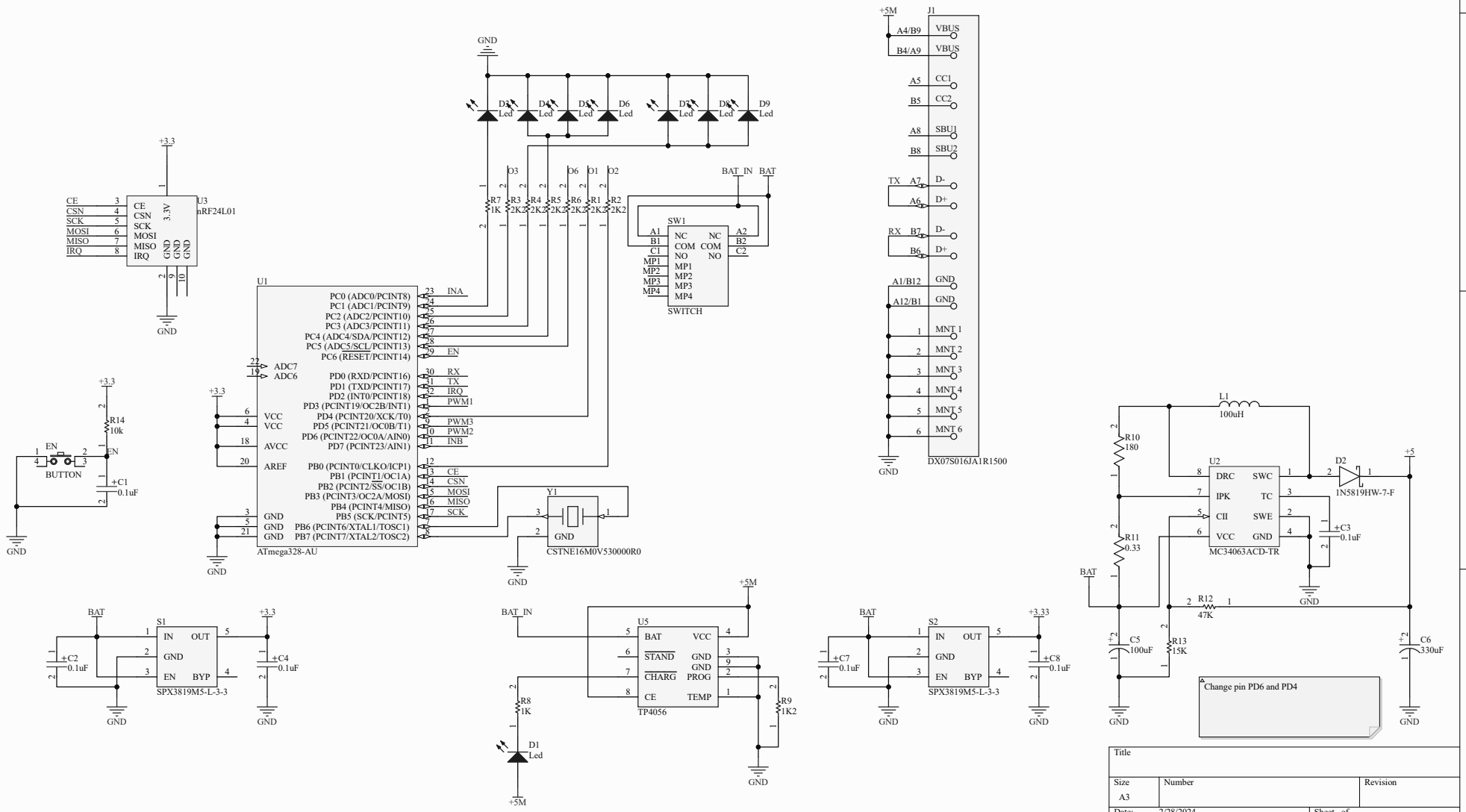
U3
nRF24L01
CE
CSN
SCK
MOSI
MISO
IRQ
3.3V
GND
U1
ATmega328-AU
PC0 (ADC0/PCINT8)
PC1 (ADC1/PCINT9)
PC2 (ADC2/PCINT10)
PC3 (ADC3/PCINT11)
PC4 (ADC4/SDA/PCINT12)
PC5 (ADC5/SCL/PCINT13)
PC6 (RESET/PCINT14)
PD0 (RXD/PCINT16)
PD1 (TXD/PCINT17)
PD2 (INT0/PCINT18)
PD3 (PCINT19/OC2B/INT1)
PD4 (PCINT20/XCK/T0)
PD5 (PCINT21/OC0B/T1)
PD6 (PCINT22/OC0A/AIN0)
PD7 (PCINT23/AIN1)
PB0 (PCINT0/CLKO/ICP1)
PB1 (PCINT1/OC1A)
PB2 (PCINT2/SS/OC1B)
PB3 (PCINT3/OC2A/MOSI)
PB4 (PCINT4/MISO)
PB5 (SCK/PCINT5)
PB6 (PCINT6/XTAL1/TOSC1)
PB7 (PCINT7/XTAL2/TOSC2)
ADC7
ADC6
VCC
AVCC
AREF
INA
EN
RX
TX
IRQ
PWM1
PWM3
PWM2
INB
CE
CSN
MOSI
MISO
SCK
SW1
SWITCH
NC
COM
NO
MP1
MP2
MP3
MP4
BAT_IN
BAT
Y1
CSTNE16M0V530000R0
BUTTON
R14
10k
C1
0.1uF
R7
1K
R3
2K2
R4
R5
R6
R1
R2
D3
D4
D5
D6
D7
D8
D9
Led
J1
DX07S016JA1R1500
VBUS
CC1
CC2
SBU1
SBU2
D-
D+
MNT 1
MNT 2
MNT 3
MNT 4
MNT 5
MNT 6
+5M
S1
S2
SPX3819M5-L-3-3
IN
OUT
EN
BYP
C2
C4
C7
C8
U5
TP4056
BAT
STAND
CHARG
VCC
PROG
TEMP
R8
R9
1K2
D1
U2
MC34063ACD-TR
DRC
IPK
CII
SWC
TC
SWE
L1
100uH
D2
1N5819HW-7-F
R10
180
R11
0.33
R12
47K
R13
15K
C3
C5
100uF
C6
330uF
+5
Change pin PD6 and PD4
Title
Size
A3
Number
Revision
Date:
2/28/2024
Sheet of
File:
D:\Projects\..\Sheet1.SchDoc
Drawn By: