PROJECT: STM32

Version: *

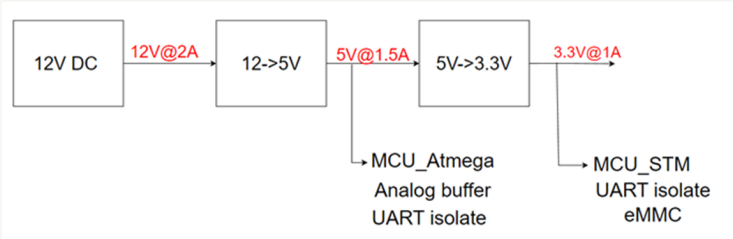
12V DC
12V@2A
12->5V
5V@1.5A
5V->3.3V
3.3V@1A
MCU_Atmega
Analog buffer
UART isolate
MCU_STM
UART isolate
eMMC

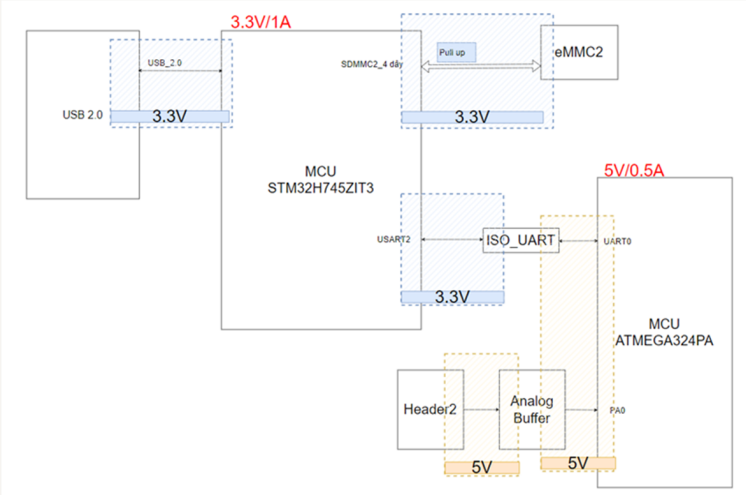
3.3V/1A
USB_2.0
USB 2.0
3.3V
SDMMC2_4 dây
Pull up
eMMC2
3.3V
MCU
STM32H745ZIT3
5V/0.5A
USART2
ISO_UART
UART0
3.3V
MCU
ATMEGA324PA
Header2
Analog
Buffer
PA0
5V
5V

INDEX

Page	Title	Page	Title	Page	Title
1	COVER PAGE	11	.....	21	.....
2	BLOCK DIAGRAM	12	.....	22	.....
3	INDEX	13	.....	23	.....
4	POWER	14	.....	24	.....
5	MCU	15	.....	25	.....
6	eMMC	16	.....	26	.....
7	AVR	17	.....	27	.....
8	ISO UART	18	.....	28	.....
9	.....	19	.....	29	.....
10	.....	20	.....	30	.....

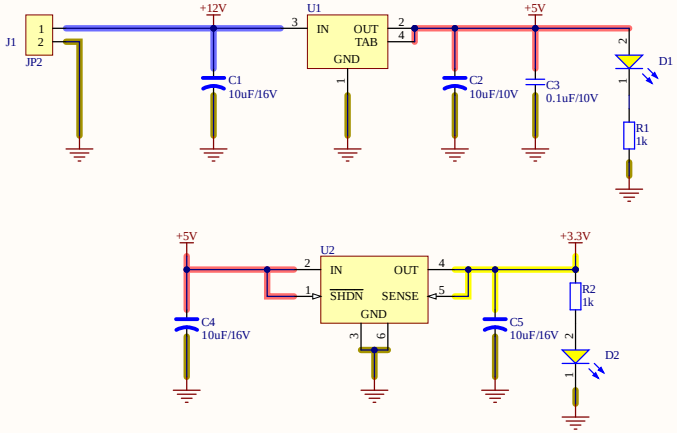
J1
JP2
+12V
C1
10uF/16V
U1
IN
OUT
TAB
GND
C2
10uF/10V
+5V
C3
0.1uF/10V
D1
R1
1k
+5V
C4
10uF/16V
U2
IN
OUT
SHDN
SENSE
GND
+3.3V
R2
1k
C5
10uF/16V
D2

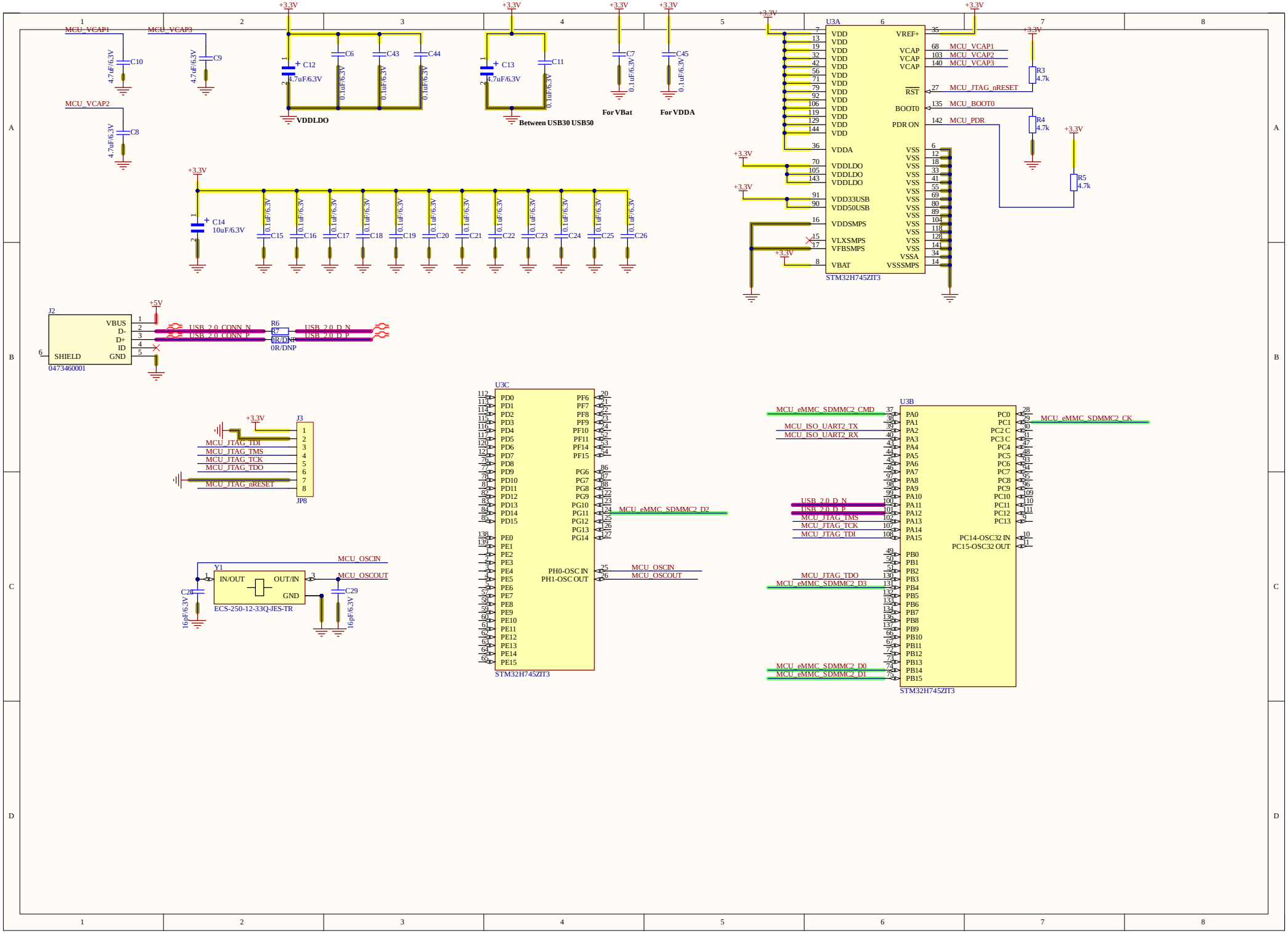
MCU_VCAP1
MCU_VCAP2
MCU_VCAP3
C10 4.7uF/6.3V
C8 4.7uF/6.3V
C9 4.7uF/6.3V
C12 4.7uF/6.3V
C13 4.7uF/6.3V
C6 0.1uF/6.3V
C43 0.1uF/6.3V
C44 0.1uF/6.3V
C11 0.1uF/6.3V
C7 0.1uF/6.3V
C45 0.1uF/6.3V
+3.3V
VDDLDO
Between USB30 USB50
For VBat
For VDDA
C14 10uF/6.3V
C15 0.1uF/6.3V
C16 0.1uF/6.3V
C17 0.1uF/6.3V
C18 0.1uF/6.3V
C19 0.1uF/6.3V
C20 0.1uF/6.3V
C21 0.1uF/6.3V
C22 0.1uF/6.3V
C23 0.1uF/6.3V
C24 0.1uF/6.3V
C25 0.1uF/6.3V
C26 0.1uF/6.3V
U3A
STM32H745ZIT3
VDD
VDDA
VDDLDO
VDD33USB
VDD50USB
VDDSMPS
VLXSMPS
VFBSMPS
VBAT
VREF+
VCAP
RST
BOOT0
PDR ON
VSS
VSSA
VSSSMPS
MCU_VCAP1
MCU_VCAP2
MCU_VCAP3
MCU_JTAG_nRESET
MCU_BOOT0
MCU_PDR
R3 4.7k
R4 4.7k
R5 4.7k
J2
0473460001
VBUS
D-
D+
ID
GND
SHIELD
+5V
USB_2.0_CONN_N
USB_2.0_CONN_P
R6
0R/DNP
USB_2.0_D_N
USB_2.0_D_P
J3
JP8
MCU_JTAG_TDI
MCU_JTAG_TMS
MCU_JTAG_TCK
MCU_JTAG_TDO
MCU_JTAG_nRESET
Y1
IN/OUT
OUT/IN
GND
ECS-250-12-33Q-JES-TR
MCU_OSCIN
MCU_OSCOUT
C28 16pF/6.3V
C29 16pF/6.3V
U3C
STM32H745ZIT3
PD0
PD1
PD2
PD3
PD4
PD5
PD6
PD7
PD8
PD9
PD10
PD11
PD12
PD13
PD14
PD15
PE0
PE1
PE2
PE3
PE4
PE5
PE6
PE7
PE8
PE9
PE10
PE11
PE12
PE13
PE14
PE15
PF6
PF7
PF8
PF9
PF10
PF11
PF14
PF15
PG6
PG7
PG8
PG9
PG10
PG11
PG12
PG13
PG14
PH0-OSC IN
PH1-OSC OUT
MCU_eMMC_SDMMC2_D2
U3B
STM32H745ZIT3
PA0
PA1
PA2
PA3
PA4
PA5
PA6
PA7
PA8
PA9
PA10
PA11
PA12
PA13
PA14
PA15
PB0
PB1
PB2
PB3
PB4
PB5
PB6
PB7
PB8
PB9
PB10
PB11
PB12
PB13
PB14
PB15
PC0
PC1
PC2 C
PC3 C
PC4
PC5
PC6
PC7
PC8
PC9
PC10
PC11
PC12
PC13
PC14-OSC32 IN
PC15-OSC32 OUT
MCU_eMMC_SDMMC2_CMD
MCU_ISO_UART2_TX
MCU_ISO_UART2_RX
MCU_eMMC_SDMMC2_CK
MCU_JTAG_TDO
MCU_eMMC_SDMMC2_D3
MCU_eMMC_SDMMC2_D0
MCU_eMMC_SDMMC2_D1

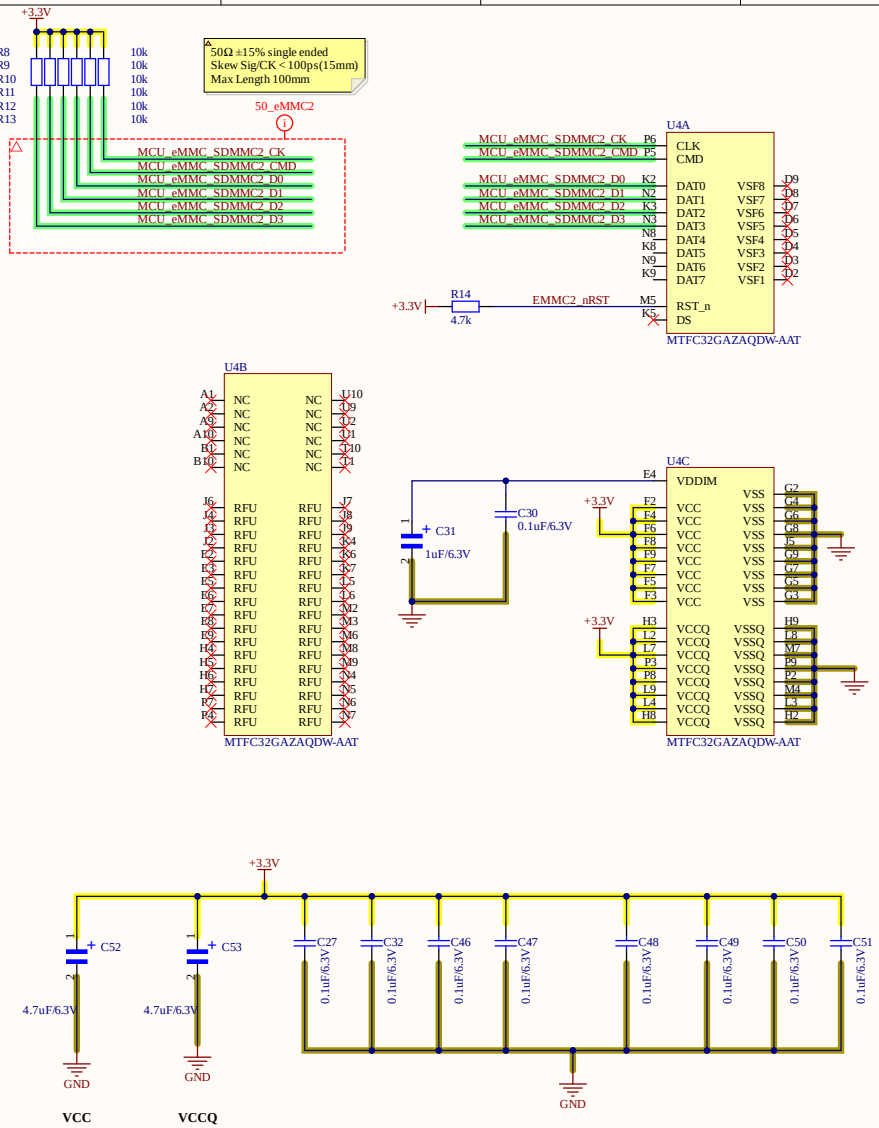
+3.3V
R8 10k
R9 10k
R10 10k
R11 10k
R12 10k
R13 10k
50Ω ±15% single ended
Skew Sig/CK < 100ps(15mm)
Max Length 100mm
50_eMMC2
MCU_eMMC_SDMMC2_CK
MCU_eMMC_SDMMC2_CMD
MCU_eMMC_SDMMC2_D0
MCU_eMMC_SDMMC2_D1
MCU_eMMC_SDMMC2_D2
MCU_eMMC_SDMMC2_D3
U4A
CLK P6
CMD P5
DAT0 K2
DAT1 N2
DAT2 K3
DAT3 N3
DAT4 N8
DAT5 K8
DAT6 N9
DAT7 K9
RST_n M5
DS K5
VSF8 D9
VSF7 D8
VSF6 D7
VSF5 D6
VSF4 D5
VSF3 D4
VSF2 D3
VSF1 D2
R14 4.7k
EMMC2_nRST
MTFC32GAZAQDW-AAT
U4B
NC
RFU
U4C
VDDIM E4
VCC
VSS
VCCQ
VSSQ
C30 0.1uF/6.3V
C31 1uF/6.3V
C52 4.7uF/6.3V
C53 4.7uF/6.3V
C27 0.1uF/6.3V
C32 0.1uF/6.3V
C46 0.1uF/6.3V
C47 0.1uF/6.3V
C48 0.1uF/6.3V
C49 0.1uF/6.3V
C50 0.1uF/6.3V
C51 0.1uF/6.3V
GND
VCC
VCCQ

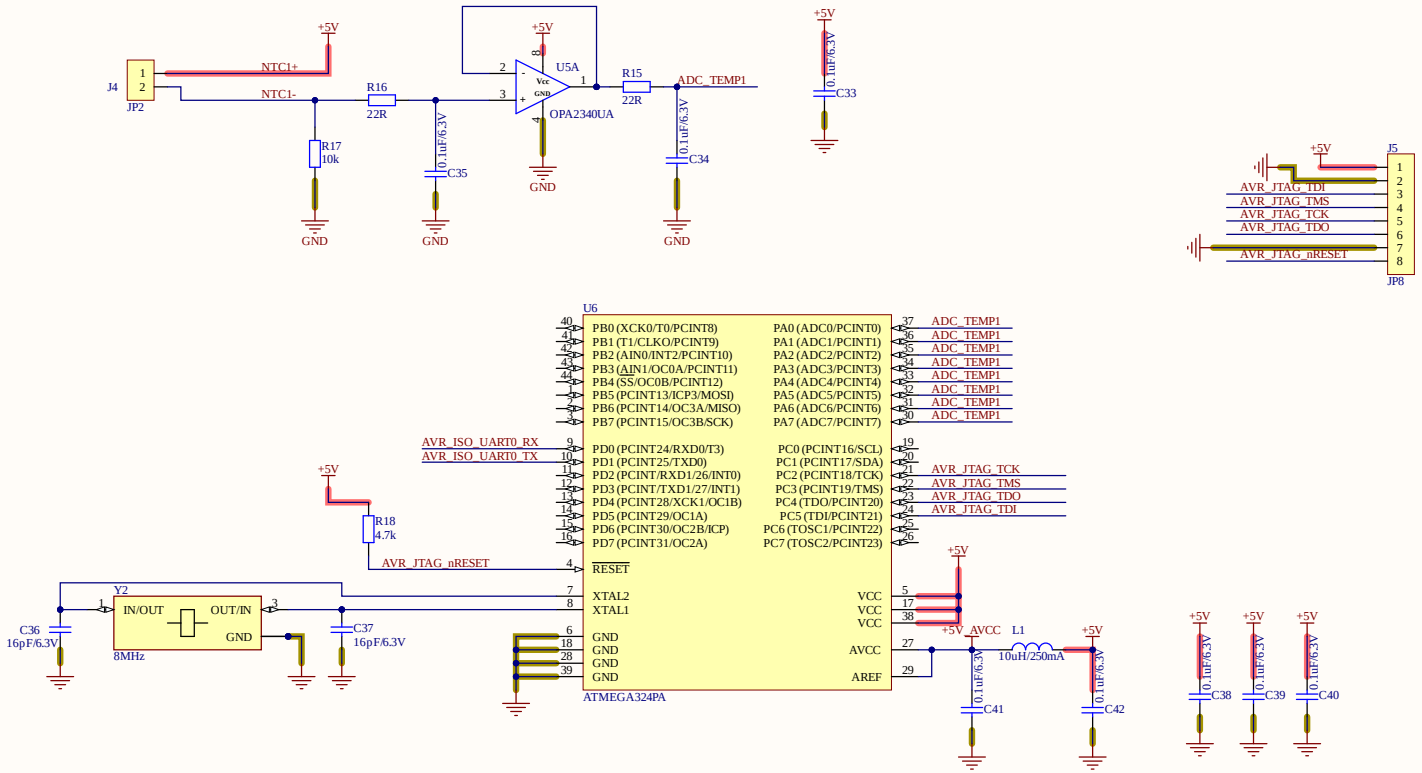
J4
JP2
NTC1+
NTC1-
+5V
R16
22R
R17
10k
GND
0.1uF/6.3V
C35
U5A
OPA2340UA
R15
22R
ADC_TEMP1
C34
C33
J5
JP8
AVR_JTAG_TDI
AVR_JTAG_TMS
AVR_JTAG_TCK
AVR_JTAG_TDO
AVR_JTAG_nRESET
U6
ATMEGA324PA
PB0 (XCK0/T0/PCINT8)
PB1 (T1/CLKO/PCINT9)
PB2 (AIN0/INT2/PCINT10)
PB3 (AIN1/OC0A/PCINT11)
PB4 (SS/OC0B/PCINT12)
PB5 (PCINT13/ICP3/MOSI)
PB6 (PCINT14/OC3A/MISO)
PB7 (PCINT15/OC3B/SCK)
PD0 (PCINT24/RXD0/T3)
PD1 (PCINT25/TXD0)
PD2 (PCINT/RXD1/26/INT0)
PD3 (PCINT/TXD1/27/INT1)
PD4 (PCINT28/XCK1/OC1B)
PD5 (PCINT29/OC1A)
PD6 (PCINT30/OC2B/ICP)
PD7 (PCINT31/OC2A)
RESET
XTAL2
XTAL1
GND
PA0 (ADC0/PCINT0)
PA1 (ADC1/PCINT1)
PA2 (ADC2/PCINT2)
PA3 (ADC3/PCINT3)
PA4 (ADC4/PCINT4)
PA5 (ADC5/PCINT5)
PA6 (ADC6/PCINT6)
PA7 (ADC7/PCINT7)
PC0 (PCINT16/SCL)
PC1 (PCINT17/SDA)
PC2 (PCINT18/TCK)
PC3 (PCINT19/TMS)
PC4 (TDO/PCINT20)
PC5 (TDI/PCINT21)
PC6 (TOSC1/PCINT22)
PC7 (TOSC2/PCINT23)
VCC
AVCC
AREF
AVR_ISO_UART0_RX
AVR_ISO_UART0_TX
R18
4.7k
Y2
IN/OUT
OUT/IN
8MHz
C36
16pF/6.3V
C37
16pF/6.3V
L1
10uH/250mA
C41
C42
C38
C39
C40

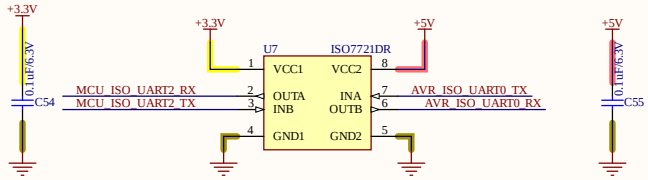
+3.3V
0.1uF/6.3V
C54
+3.3V
U7
ISO7721DR
VCC1
VCC2
1
8
MCU_ISO_UART2_RX
MCU_ISO_UART2_TX
2
3
OUTA
INB
INA
OUTB
7
6
AVR_ISO_UART0_TX
AVR_ISO_UART0_RX
4
GND1
GND2
5
+5V
+5V
0.1uF/6.3V
C55