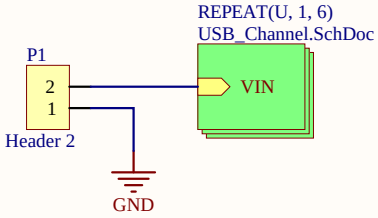

Title		
Size A	Number	Revision
Date: 5/01/2026		Sheet of
File: F:\ALTIUM_PROJECT\..\Top.SchDoc		Drawn By:

USB_1

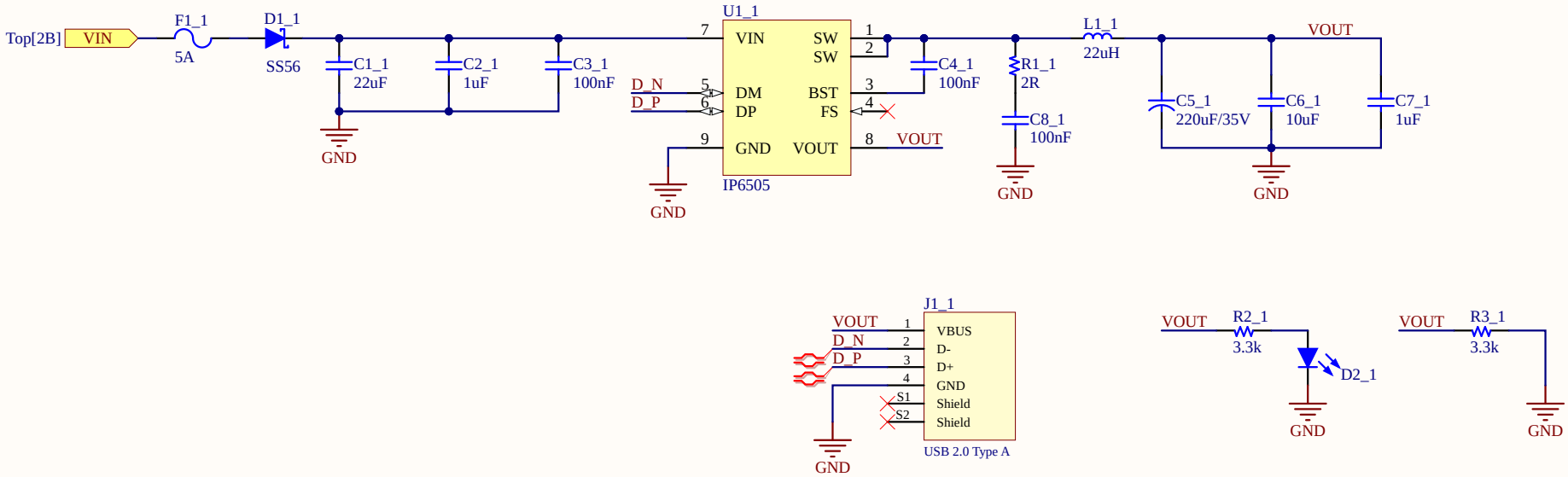

Title		
Size A	Number	Revision
Date: 5/01/2026	Sheet of	
File: F:\ALTIUM_PROJECT\..\USB_Channel.SchDoc	Drawn By:	

USB_1

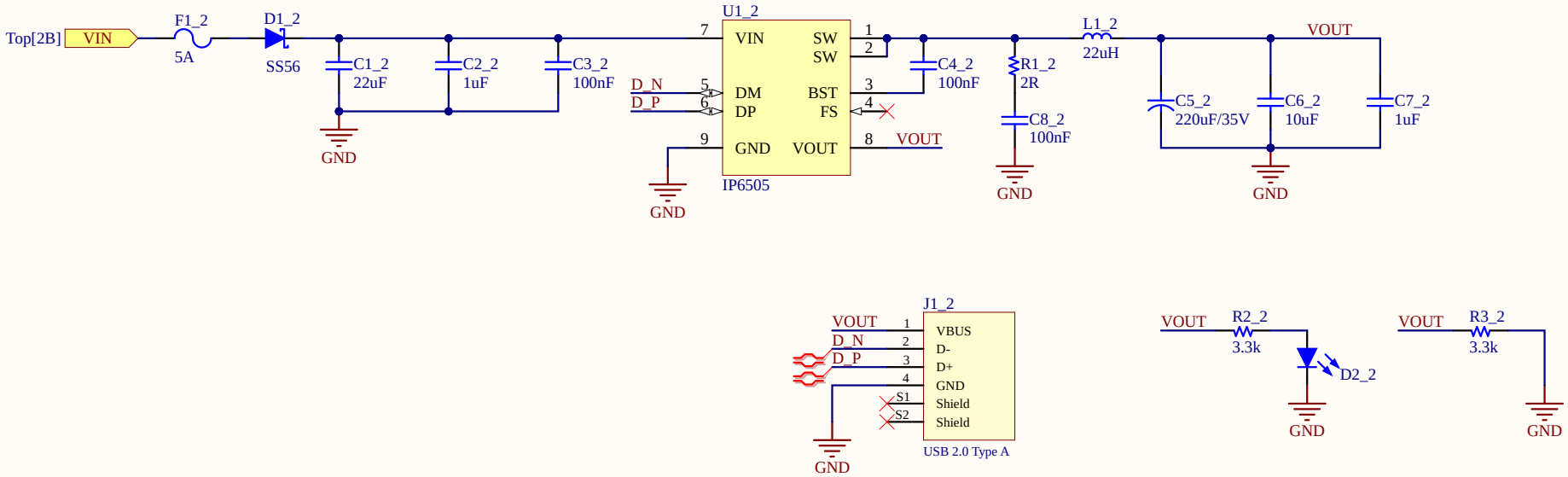

Title		
Size A	Number	Revision
Date: 5/01/2026		Sheet of
File: F:\ALTIUM_PROJECT\..\USB_Channel.SchDoc		Drawn By:

USB_1

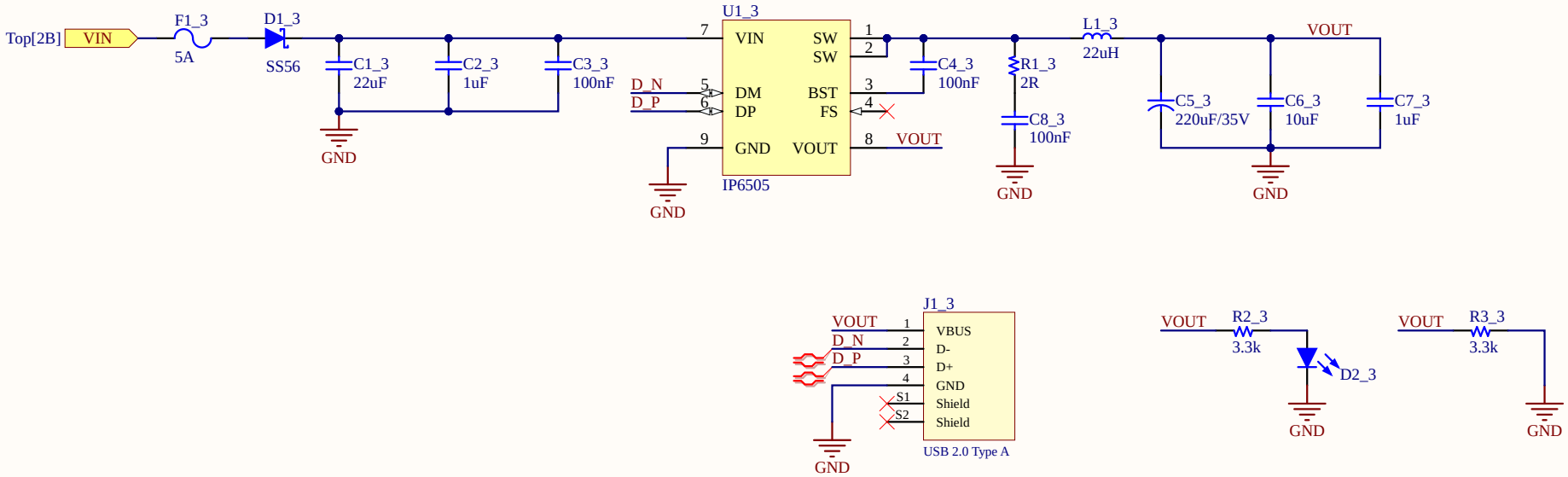

Title		
Size A	Number	Revision
Date: 5/01/2026		Sheet of
File: F:\ALTIUM_PROJECT\..\USB_Channel.SchDoc		Drawn By:

USB_1

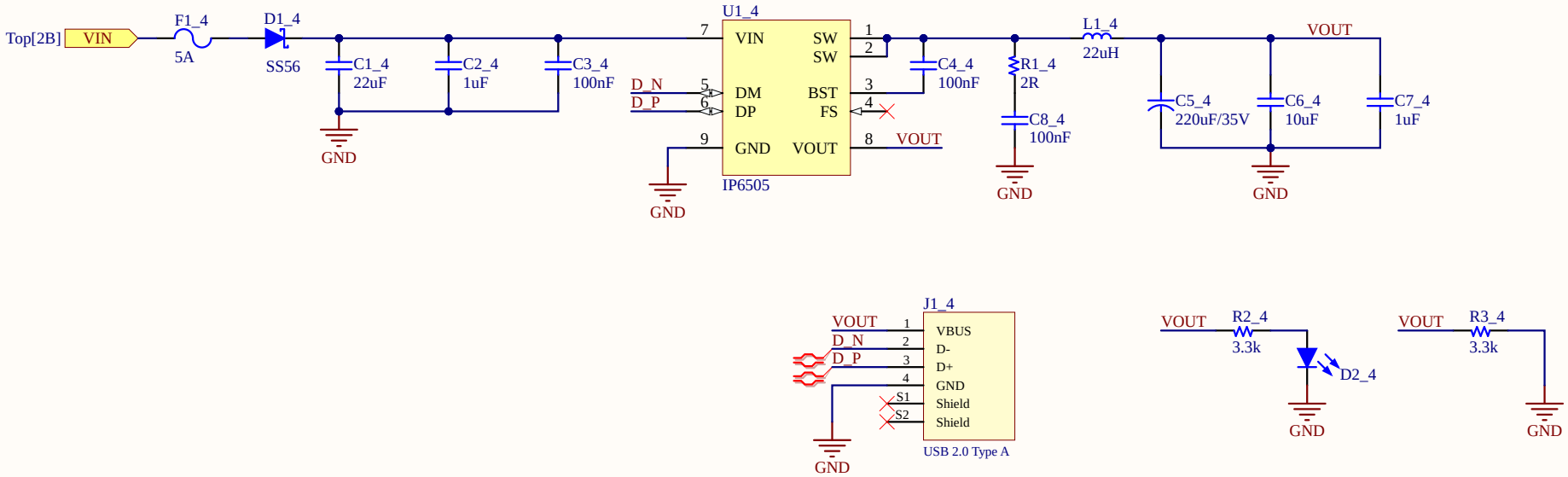

Title		
Size A	Number	Revision
Date: 5/01/2026	Sheet of	
File: F:\ALTIUM_PROJECT\..\USB_Channel.SchDoc	Drawn By:	

USB_1

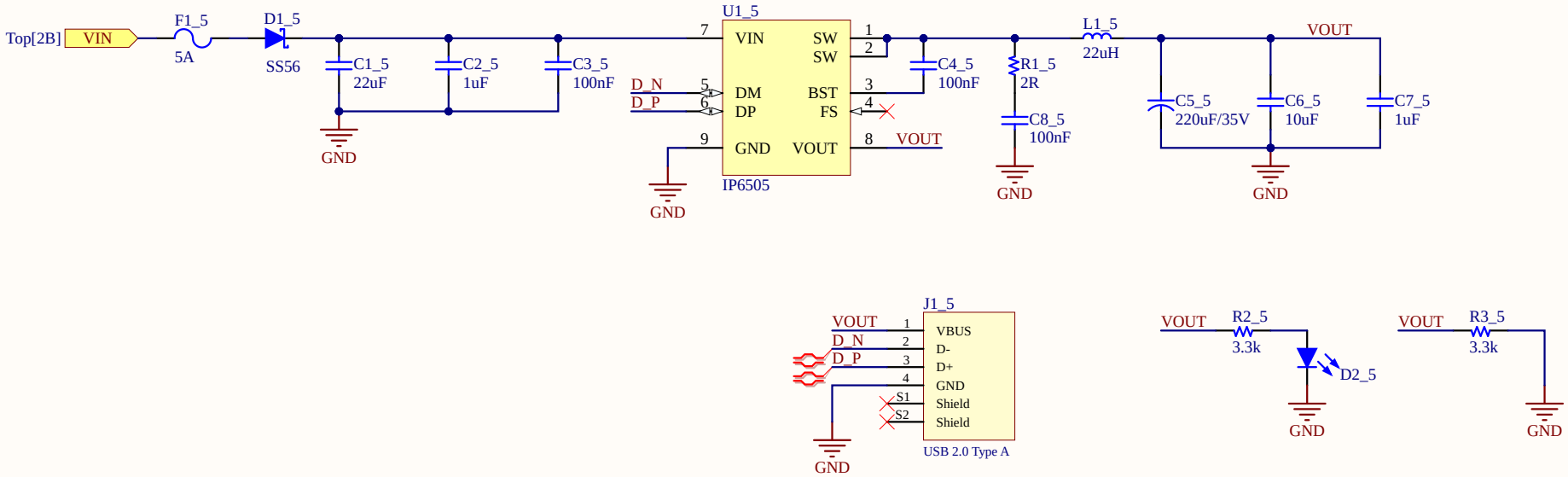

Title		
Size A	Number	Revision
Date: 5/01/2026		Sheet of
File: F:\ALTIUM_PROJECT\..\USB_Channel.SchDoc		Drawn By:

USB_1

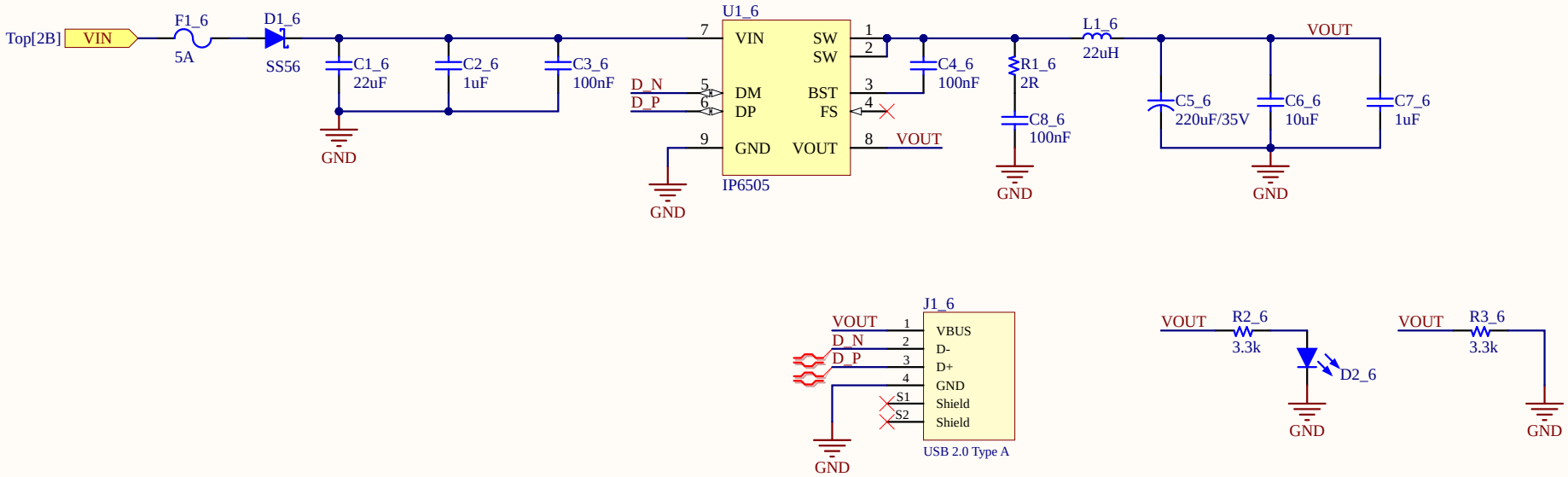

Title		
Size A	Number	Revision
Date: 5/01/2026		Sheet of
File: F:\ALTIUM_PROJECT\..\USB_Channel.SchDoc		Drawn By: