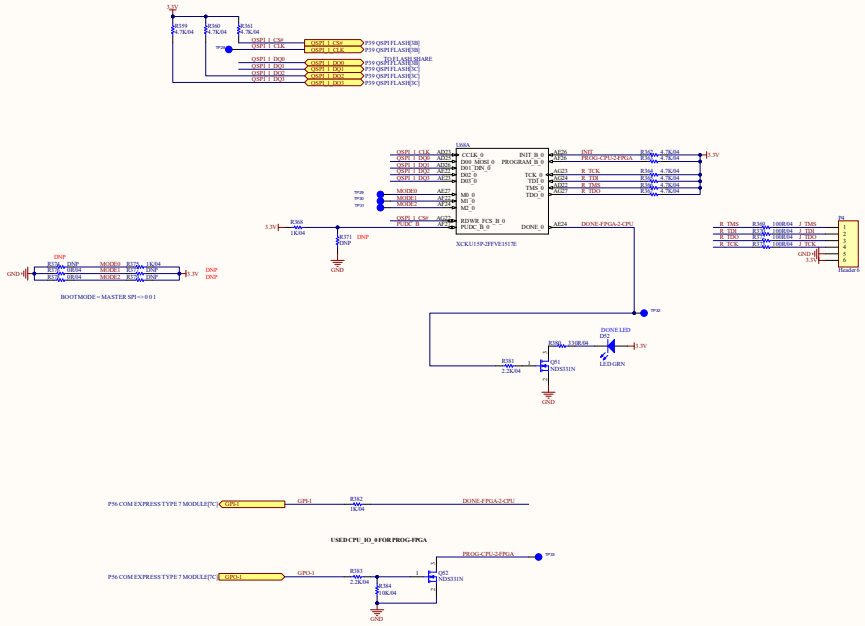

project: *N3-HTPSR5G*			***HTP Hitech Co.,Ltd*** *OCT5B - 2303, Resco Urban Area 74 Pham Van Dong, Bac Tu Liem Hanoi*
Size: A4	Number: 9	Revision: V1	
Date: 10/1/2024 Time: 8:45:18 AM		Sheet 9 of 71	
File: P9 CONFIG.SchDoc			

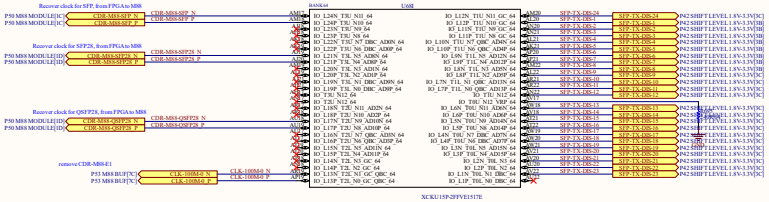

project: *N3-HTPSR5G*			***HTP Hitech Co.,Ltd*** *OCT5B - 2303, Resco Urban Area 74 Pham Van Dong, Bac Tu Liem Hanoi*
Size: A4	Number: 10	Revision: V1	
Date: 10/1/2024	Time: 8:45:18 AM	Sheet 10of 71	
File: P10 BANK 64.SchDoc			

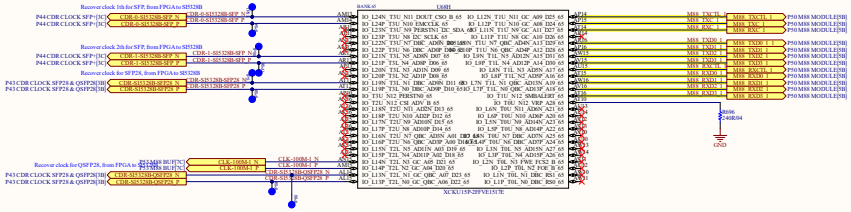

project: *N3-HTPSR5G*		**HTP Hitech Co.,Ltd** *OCT5B - 2303, Resco Urban Area* *74 Pham Van Dong, Bac Tu Liem* *Hanoi*
Size: A4	Number: 11	Revision: V1
Date: 10/1/2024 Time: 8:45:18 AM		Sheet 11 of 71
File: P11 BANK 65.SchDoc		

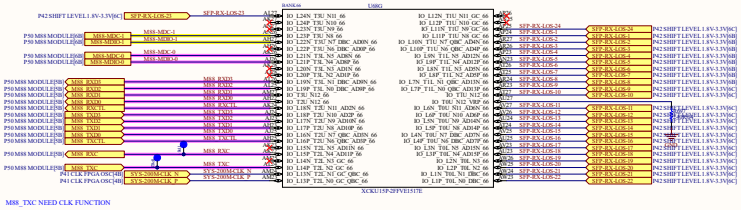

M88_TXC NEED CLK FUNCTION

HTP	project: *N3-HTPSR5G*		**HTP Hitech Co.,Ltd** *OCT5B - 2303, Resco Urban Area* *74 Pham Van Dong, Bac Tu Liem* *Hanoi*
	Size: A4	Number: 12	Revision: V1
	Date: 10/1/2024 Time: 8:45:18 AM		Sheet 12of 71
	File: P12 BANK 66.SchDoc		

The entire read data bus must be placed in a single bank irrespective of the number of memory components: ok

All byte lanes that are used for the read data of a single component must be adjacent, no skip byte lanes are allowed.: ok

One of the read data bytes of a memory component should be allocated in the center byte lanes (byte lanes 1 and 2): ok

If a byte lane is used for read data, Bit[0] and Bit[6] must be used. Read clock (CQ or CQ#) gets the first priority and data (Q) is the next.: ok

Read data buses of two components should not share a byte lane: ok

Read Clock pair must be allocated in one of the byte lanes that are used for the read: ok

CQ/CQ# pair must be allocated in a single byte lane.: ok

CQ/CQ# must be allocated only in the byte lanes 1 and 2 because the other byte: ok

CQ/CQ# must be allocated in the center byte lane of all used byte lanes. If two byte lanes are used for the read data, either one of them can be used for CQ/CQ# allocation: ok

CQ and CQ# must be allocated to either pin 0 or pin 6 of a byte lane. For example, if CQ is allocated to pin 0, CQ# should be allocated to pin 6 and vice versa: ok

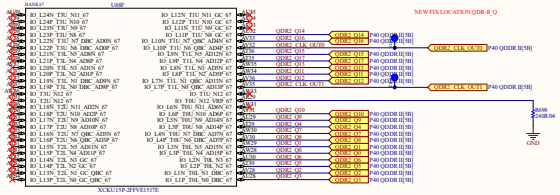

project: *N3-HTPSR5G*		**HTP Hitech Co.,Ltd**
Size: A4	Number: 13	Revision: V1	*OCT5B - 2303, Resco Urban Area*
Date: 10/1/2024 Time: 8:45:18 AM	Sheet 13 of 71	*74 Pham Van Dong, Bac Tu Liem*
File: P13 BANK 67.SchDoc		*Hanoi*

D and B/W0/1 in same bank:0k
Only one write data byte is allowed per byte lane:0k
All byte lanes that are used for the write data of a single component must be adjacent, no skip byte lanes are allowed: ok

One of the write data bytes of a memory component should be allocated in the: ok
Memory Clock pair must be allocated in one of the byte lanes that are used for the write data of the corresponding memory component: ok

Memory clock should come from one of the center byte lanes (byte lanes 1 and 2): ok
K/K# can be allocated to any P/N pair: ok

All address/control (A/C) bits must be allocated in a single bank: ok
All A/C byte lanes should be contiguous and no skip byte lanes is allowed: ok
The address/control bank should be the same or adjacent to that of the write data bank: ok
There should not be any empty byte lane or used byte lane between A/C and write data byte lanes. This rule applies when A/C and write data share the same bank or allocated in adjacent banks: ok
Address/control pins should not share a byte lane with the write data as well as rate: ok

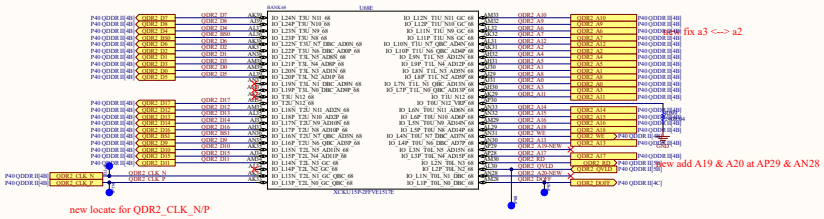

project: *N3-HTPSR5G*		
Size: A4	Number: 14	Revision: V1
Date: 10/1/2024 Time: 8:45:19 AM		Sheet 14of 71
File: P14 BANK 68.SchDoc		

HTP Hitech Co.,Ltd
OCT5B - 2303, Resco Urban Area
74 Pham Van Dong, Bac Tu Liem
Hanoi

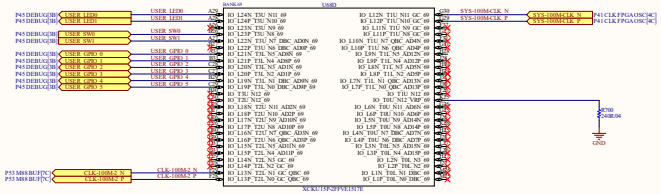

HTP	project: *N3-HTPSR5G*		**HTP Hitech Co.,Ltd** *OCT5B - 2303, Resco Urban Area* *74 Pham Van Dong, Bac Tu Liem* *Hanoi*
	Size: A4	Number: 15	Revision: V1
	Date: 10/1/2024 Time: 8:45:19 AM		Sheet 15of 71
	File: P15 BANK 69.SchDoc		

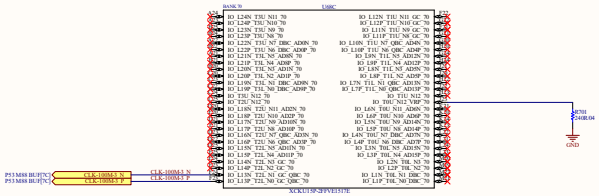

project: *N3-HTPSR5G*			***HTP Hitech Co.,Ltd*** *OCT5B - 2303, Resco Urban Area 74 Pham Van Dong, Bac Tu Liem Hanoi*
Size: A4	Number: 16	Revision: V1	
Date: 10/1/2024	Time: 8:45:19 AM	Sheet 16of 71	
File: P16 BANK 70.SchDoc			

HTP

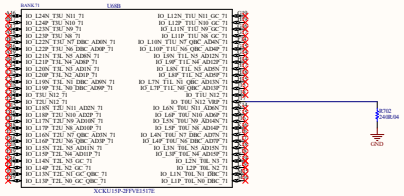

HTP	project: *N3-HTPSR5G*		**HTP Hitech Co.,Ltd** *OCT5B - 2303, Resco Urban Area* *74 Pham Van Dong, Bac Tu Liem* *Hanoi*
	Size: A4	Number: 17	Revision: V1
	Date: 10/1/2024 Time: 8:45:19 AM		Sheet 17of 71
	File: P17 BANK 71.SchDoc		

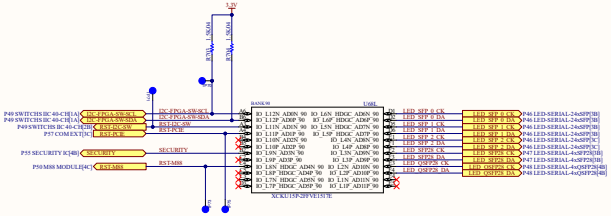

project: *N3-HTPSR5G*			***HTP Hitech Co.,Ltd*** *OCT5B - 2303, Resco Urban Area 74 Pham Van Dong, Bac Tu Liem Hanoi*
Size: A4	Number: 18	Revision: V1	
Date: 10/1/2024 Time: 8:45:19 AM		Sheet 18of 71	
File: P18 BANK 90.SchDoc			

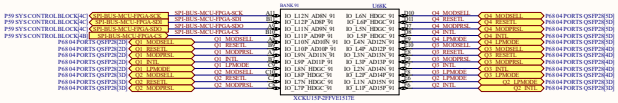

project: *N3-HTPSR5G*		
Size: A4	Number: 19	Revision: V1
Date: 10/1/2024 Time: 8:45:19 AM		Sheet 19of 71
File: P19 BANK 91.SchDoc		

HTP Hitech Co.,Ltd
OCT5B - 2303, Resco Urban Area
74 Pham Van Dong, Bac Tu Liem
Hanoi

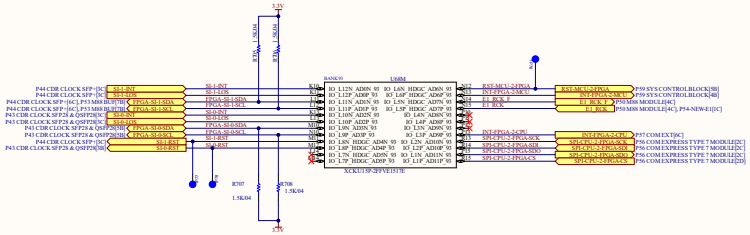

HTP	project: *N3-HTPSR5G*		**HTP Hitech Co.,Ltd** *OCT5B - 2303, Resco Urban Area* *74 Pham Van Dong, Bac Tu Liem* *Hanoi*
	Size: A4	Number: 20	Revision: V1
	Date: 10/1/2024 Time: 8:45:19 AM	Sheet 20 of 71	
	File: P20 BANK 93.SchDoc		

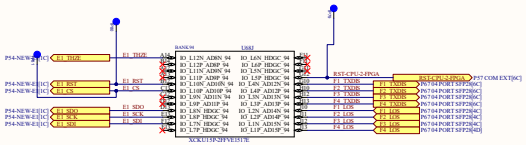

Output Pin, RESET FPGA from CPU

HTP	project: *N3-HTPSR5G*		**HTP Hitech Co.,Ltd** *OCT5B - 2303, Resco Urban Area* *74 Pham Van Dong, Bac Tu Liem* *Hanoi*
	Size: A4	Number: 21	Revision: V1
	Date: 10/1/2024 Time: 8:45:19 AM		Sheet 21of 71
	File: P21 BANK 94.SchDoc		

USED 04 GTY BANK

USED REF_CLK FROM M88 IN BANK 131

USED REF_CLK FROM S1 IN BANK 130

04 BANK SHARE 02 REF CLK

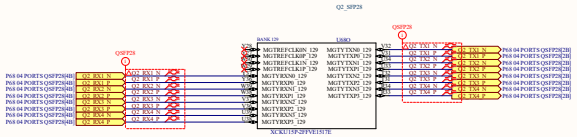

project: *N3-HTPSR5G*			**HTP Hitech Co.,Ltd** *OCT5B - 2303, Resco Urban Area 74 Pham Van Dong, Bac Tu Liem Hanoi*
Size: A4	Number: 22	Revision: V1	
Date: 10/1/2024 Time: 8:45:19 AM		Sheet 22of 71	
File: P22 GTY-129 QSFP28-0.SchDoc			

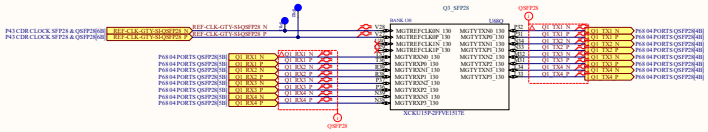

HTP	project: *N3-HTPSR5G*		**HTP Hitech Co.,Ltd** *OCT5B - 2303, Resco Urban Area* *74 Pham Van Dong, Bac Tu Liem* *Hanoi*
	Size: A4	Number: 23	Revision: V1
	Date: 10/1/2024 Time: 8:45:20 AM		Sheet 23 of 71
	File: P23 GTY-130 QSFP28-1.SchDoc		

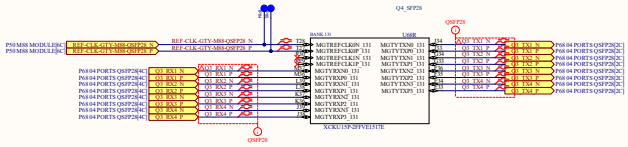

project: *N3-HTPSR5G*			***HTP Hitech Co.,Ltd*** *OCT5B - 2303, Resco Urban Area 74 Pham Van Dong, Bac Tu Liem Hanoi*
Size: A4	Number: 24	Revision: V1	
Date: 10/1/2024	Time: 8:45:20 AM	Sheet 24of 71	
File: P24 GTY-131 QSFP28-2.SchDoc			

HTP

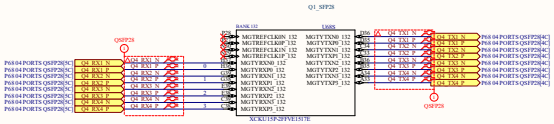

project: *N3-HTPSR5G*			***HTP Hitech Co.,Ltd*** *OCT5B - 2303, Resco Urban Area 74 Pham Van Dong, Bac Tu Liem Hanoi*
Size: A4	Number: 25	Revision: V1	
Date: 10/1/2024	Time: 8:45:20 AM	Sheet 25of 71	
File: P25 GTY-132 QSFP28-3.SchDoc			

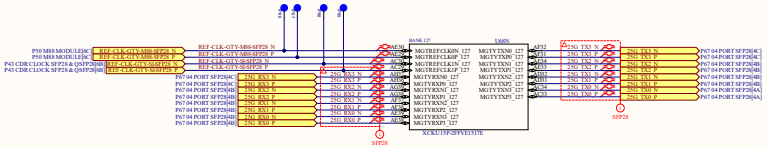

project: *N3-HTPSR5G*			***HTP Hitech Co.,Ltd*** *OCT5B - 2303, Resco Urban Area 74 Pham Van Dong, Bac Tu Liem Hanoi*
Size: A4	Number: 26	Revision: V1	
Date: 10/1/2024 Time: 8:45:20 AM		Sheet 26of 71	
File: P26 GTY-127 SFP28.SchDoc			

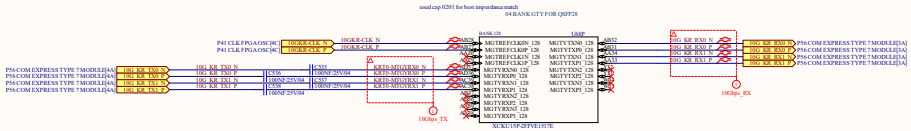

HTP	project: *N3-HTPSR5G*		**HTP Hitech Co.,Ltd** *OCT5B - 2303, Resco Urban Area* *74 Pham Van Dong, Bac Tu Liem* *Hanoi*
	Size: A4	Number: 27	Revision: V1
	Date: 10/1/2024 Time: 8:45:20 AM		Sheet 27of 71
	File: P27 GTY-128 10G-KR.SchDoc		

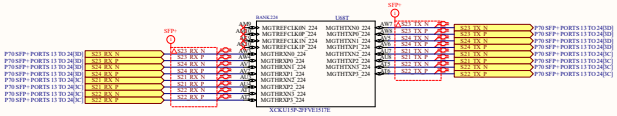

project: *N3-HTPSR5G*			***HTP Hitech Co.,Ltd*** *OCT5B - 2303, Resco Urban Area 74 Pham Van Dong, Bac Tu Liem Hanoi*
Size: A4	Number: 28	Revision: V1	
Date: 10/1/2024	Time: 8:45:20 AM	Sheet 28 of 71	
File: P28 GTH-224 X4 SFP+.SchDoc			

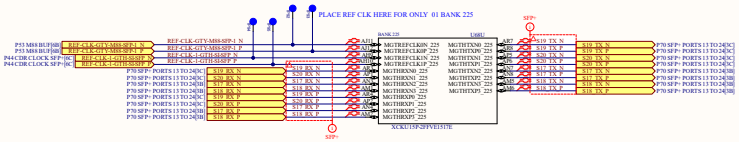

project: *N3-HTPSR5G*			***HTP Hitech Co.,Ltd*** *OCT5B - 2303, Resco Urban Area 74 Pham Van Dong, Bac Tu Liem Hanoi*
Size: A4	Number: 29	Revision: V1	
Date: 10/1/2024	Time: 8:45:20 AM	Sheet 29of 71	
File: P29 GTH-225 X4 SFP+.SchDoc			

HTP

project: *N3-HTPSR5G*			**HTP Hitech Co.,Ltd** *OCT5B - 2303, Resco Urban Area* *74 Pham Van Dong, Bac Tu Liem* *Hanoi*
Size: A4	Number: 30	Revision: V1	
Date: 10/1/2024	Time: 8:45:20 AM	Sheet 30of 71	
File: P30 GTH-228 X4 SFP+.SchDoc			

HTP

PLACE REF CLK HERE FOR SHARE 04 BANKS

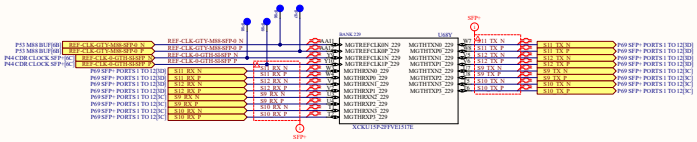

project: *N3-HTPSR5G*			***HTP Hitech Co.,Ltd*** *OCT5B - 2303, Resco Urban Area 74 Pham Van Dong, Bac Tu Liem Hanoi*
Size: A4	Number: 31	Revision: V1	
Date: 10/1/2024 Time: 8:45:20 AM		Sheet 31of 71	
File: P31 GTH-229 X4 SFP+.SchDoc			

HTP

project: *N3-HTPSR5G*			***HTP Hitech Co.,Ltd*** *OCT5B - 2303, Resco Urban Area 74 Pham Van Dong, Bac Tu Liem Hanoi*
Size: A4	Number: 32	Revision: V1	
Date: 10/1/2024	Time: 8:45:20 AM	Sheet 32of 71	
File: P32 GTH-230 X4 SFP+.SchDoc			

project: *N3-HTPSR5G*			***HTP Hitech Co.,Ltd*** *OCT5B - 2303, Resco Urban Area 74 Pham Van Dong, Bac Tu Liem Hanoi*
Size: A4	Number: 33	Revision: V1	
Date: 10/1/2024	Time: 8:45:21 AM	Sheet 33 of 71	
File: P33 GTH-231 X4 SFP+.SchDoc			

HTP

01 BANK GTY FOR PCIE x4

REF CLK FROM PCIE CONN

NEED CORECT BY PRE-BUILD VIVADO PROJECT FOR PCIE

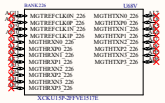

project: *N3-HTPSR5G*			***HTP Hitech Co.,Ltd*** *OCT5B - 2303, Resco Urban Area 74 Pham Van Dong, Bac Tu Liem Hanoi*
Size: A4	Number: 34	Revision: V1	
Date: 10/1/2024 Time: 8:45:21 AM		Sheet 34 of 71	
File: P34 GTH-226 FREE.SchDoc			

HTP

used cap 0201 for best impendance match

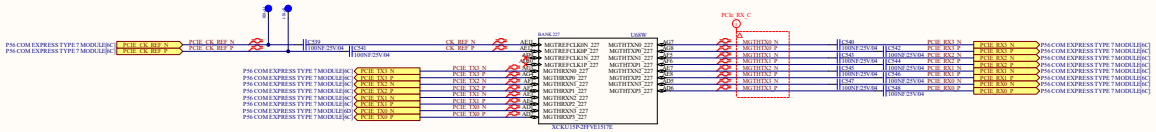

project: *N3-HTPSR5G*			***HTP Hitech Co.,Ltd*** *OCT5B - 2303, Resco Urban Area 74 Pham Van Dong, Bac Tu Liem Hanoi*
Size: A4	Number: 35	Revision: V1	
Date: 10/1/2024	Time: 8:45:21 AM	Sheet 35of 71	
File: P35 GTH-227 PCIE-X4 GEN2.SchDoc			

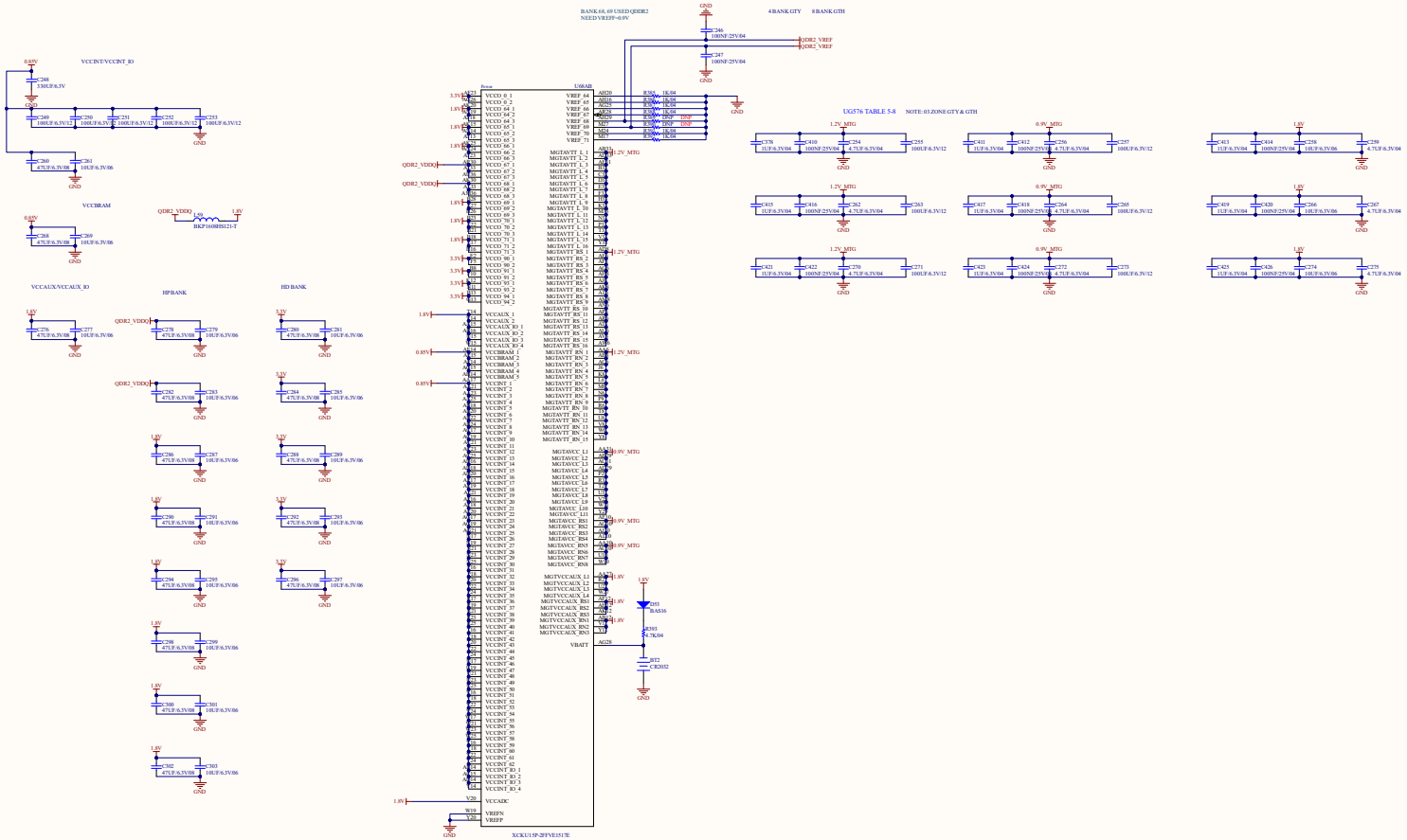

project: *N3-HTPSR5G*		
Size: A4	Number: 36	Revision: V1
Date: 10/1/2024 Time: 8:45:21 AM		Sheet 36of 71
File: P36 FPGA PWRS.SchDoc		

HTP

HTP Hitech Co.,Ltd
OCT5B - 2303, Resco Urban Area
74 Pham Van Dong, Bac Tu Liem
Hanoi

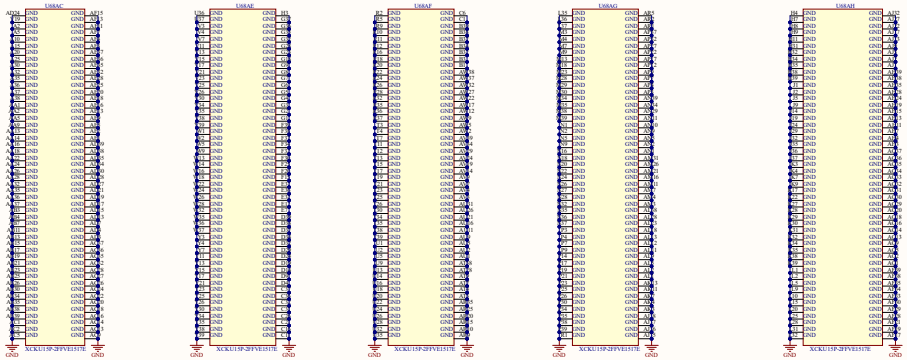

ADD 02 GND CONNECT HERE, AF17 & L32

project: *N3-HTPSR5G*			***HTP Hitech Co.,Ltd*** *OCT5B - 2303, Resco Urban Area 74 Pham Van Dong, Bac Tu Liem Hanoi*
Size: A4	Number: 37	Revision: V1	
Date: 10/1/2024	Time: 8:45:21 AM	Sheet 37of 71	
File: P37 FPGA GND.SchDoc			

HTP

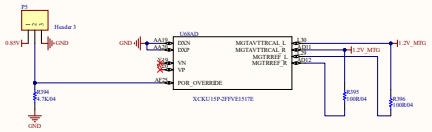

HTP	project: *N3-HTPSR5G*		**HTP Hitech Co.,Ltd** *OCT5B - 2303, Resco Urban Area* *74 Pham Van Dong, Bac Tu Liem* *Hanoi*
	Size: A4	Number: 38	Revision: V1
	Date: 10/1/2024 Time: 8:45:22 AM		Sheet 38of 71
	File: P38 FPGA EXTERN.SchDoc		

CHECK DUNG LUONG
UG570
Table 1-4: Bitstream Length for UltraScale Architecture-based FPGAs:
KU19PSIZE: 290,744,896/ MIN QSPI FLASH: 512 Mb

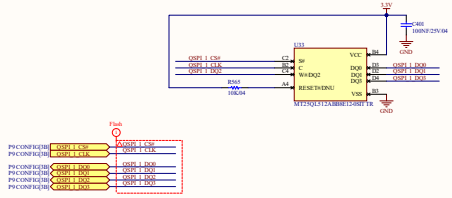

HTP	project: *N3-HTPSR5G*		**HTP Hitech Co.,Ltd** *OCT5B - 2303, Resco Urban Area* *74 Pham Van Dong, Bac Tu Liem* *Hanoi*
	Size: A4	Number: 39	Revision: V1
	Date: 10/1/2024 Time: 8:45:22 AM		Sheet 39of 71
	File: P39 QSPI FLASH.SchDoc		

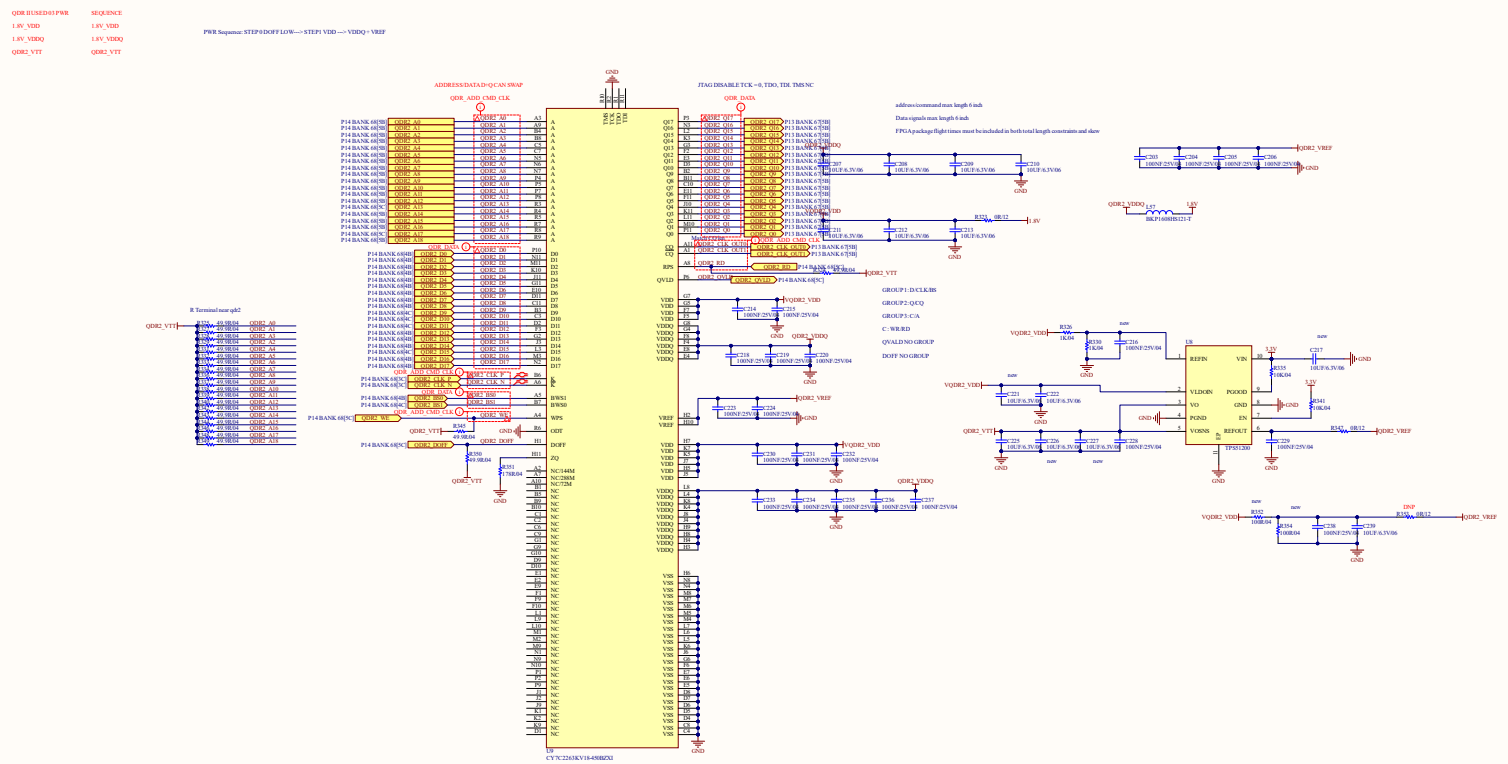

project: *N3-HTPSR5G*			***HTP Hitech Co.,Ltd***
Size: A4	Number: 40	Revision: V1	*OCT5B - 2303, Resco Urban Area*
Date: 10/1/2024	Time: 8:45:22 AM	Sheet 40 of 71	*74 Pham Van Dong, Bac Tu Liem*
File: P40 QDDR II.SchDoc			*Hanoi*

HTP

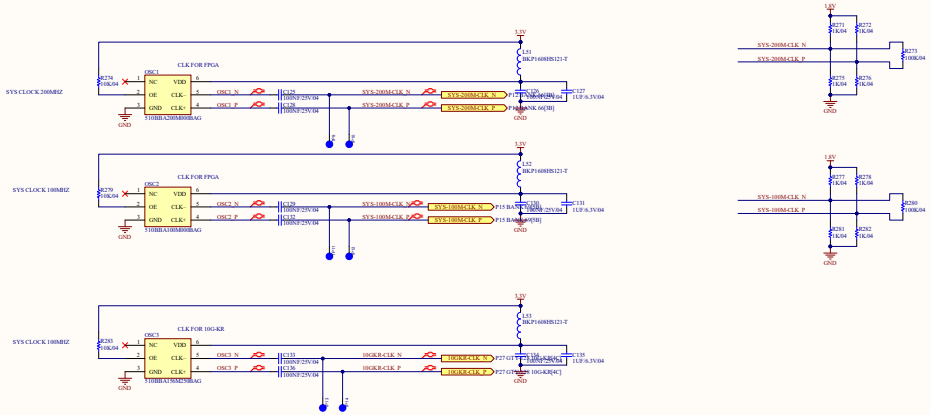

project: ***N3-HTPSR5G***

Size: A4	Number: 41	Revision: V1
Date: 10/1/2024 Time: 8:45:22 AM		Sheet 41of 71
File: P41 CLK FPGA OSC.SchDoc		

HTP Hitech Co.,Ltd
OCT5B - 2303, Resco Urban Area
74 Pham Van Dong, Bac Tu Liem
Hanoi

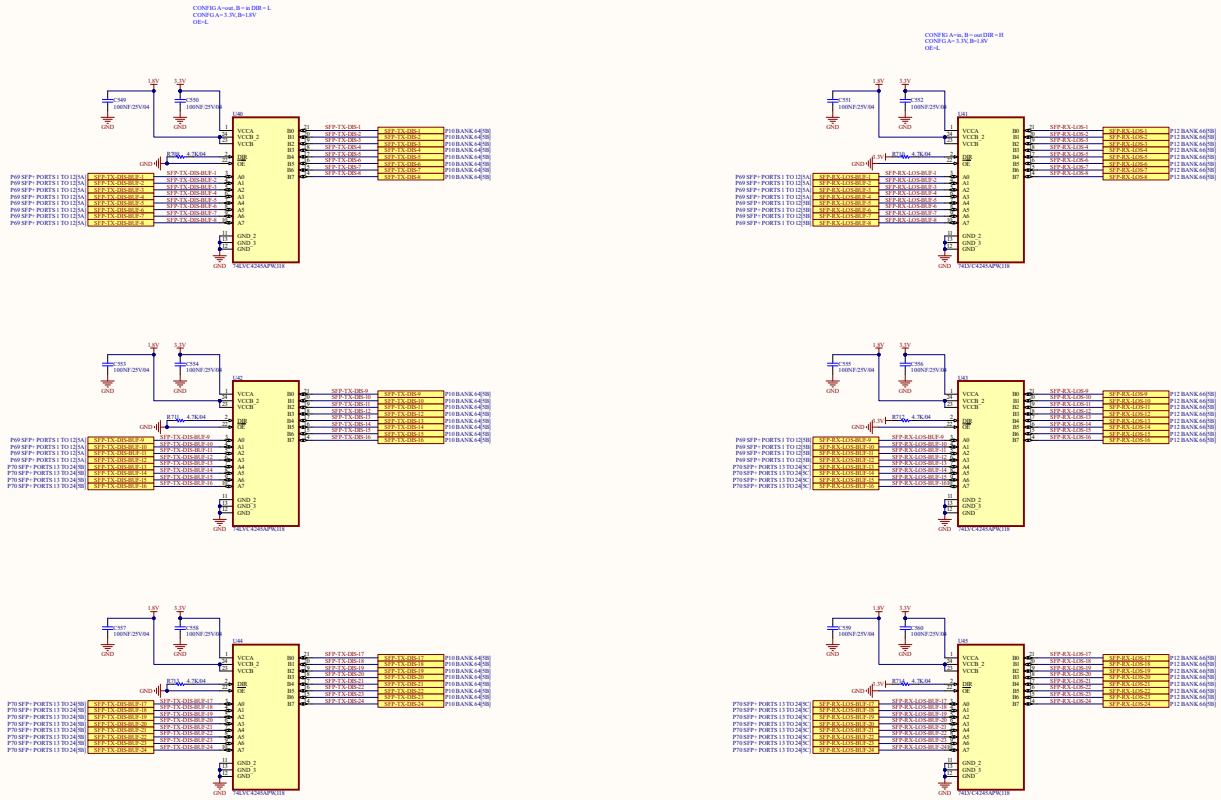

HTP	project: *N3-HTPSR5G*		***HTP Hitech Co.,Ltd*** *OCT5B - 2303, Resco Urban Area 74 Pham Van Dong, Bac Tu Liem Hanoi*
	Size: A4	Number: 42	Revision: V1
	Date: 10/1/2024	Time: 8:45:22 AM	Sheet 42of 71
	File: P42 SHIFT LEVEL 1.8V-3.3V.SchDoc		

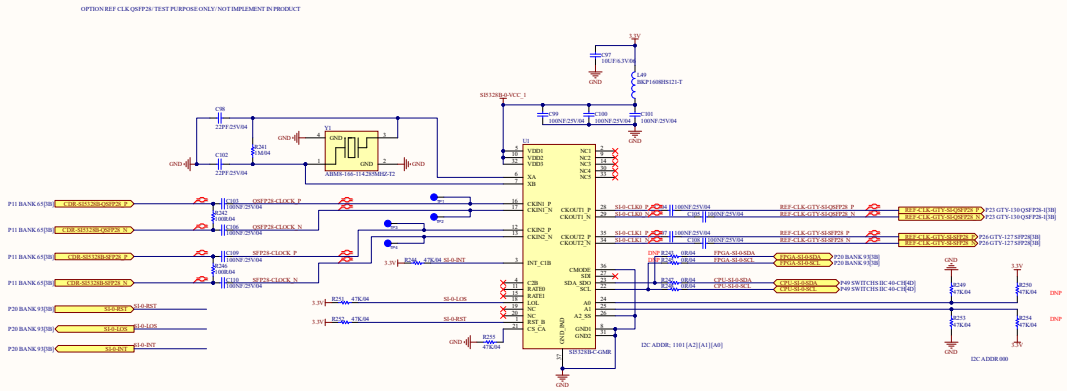

HTP	project: *N3-HTPSR5G*		**HTP Hitech Co.,Ltd** *OCT5B - 2303, Resco Urban Area* *74 Pham Van Dong, Bac Tu Liem* *Hanoi*
	Size: A4	Number: 43	Revision: V1
	Date: 10/1/2024 Time: 8:45:22 AM	Sheet 43 of 71	
	File: P43 CDR CLOCK SFP28 & QSFP28.SchDoc		

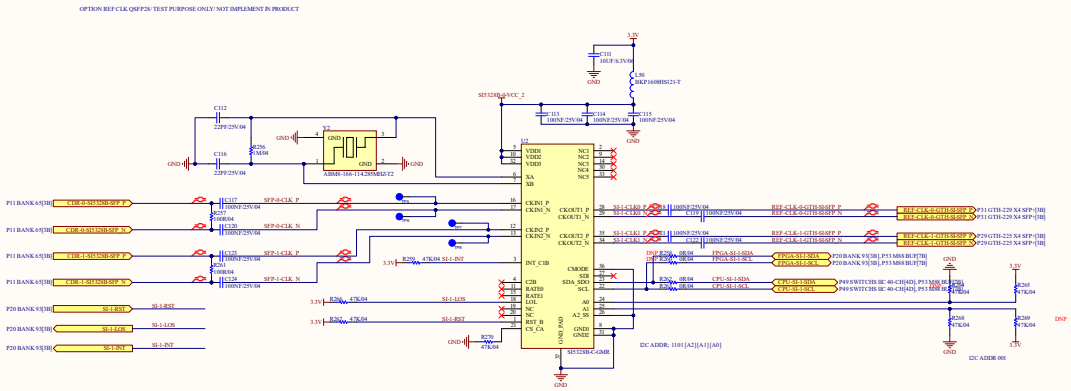

project: *N3-HTPSR5G*		**HTP Hitech Co.,Ltd**
Size: A4	Number: 44	Revision: V1
Date: 10/1/2024 Time: 8:45:22 AM		Sheet 44 of 71
File: P44 CDR CLOCK SFP+.SchDoc		

OCT5B - 2303, Resco Urban Area
74 Pham Van Dong, Bac Tu Liem
Hanoi

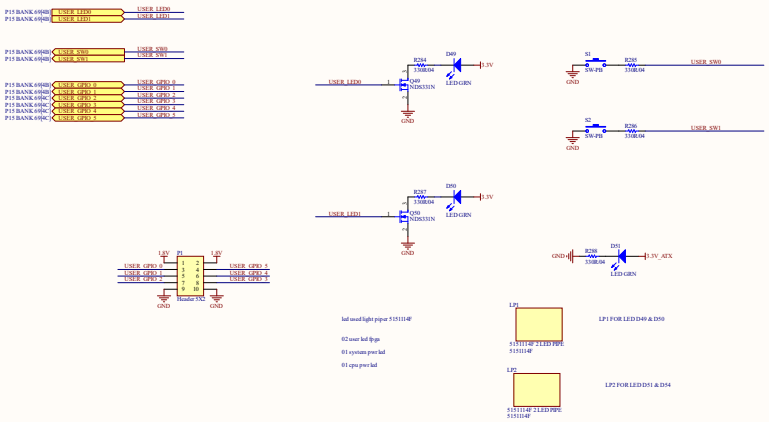

HTP	project: *N3-HTPSR5G*		**HTP Hitech Co.,Ltd** *OCT5B - 2303, Resco Urban Area* *74 Pham Van Dong, Bac Tu Liem* *Hanoi*
	Size: A4	Number: 45	Revision: V1
	Date: 10/1/2024 Time: 8:45:23 AM		Sheet 45of 71
	File: P45 DEBUG.SchDoc		

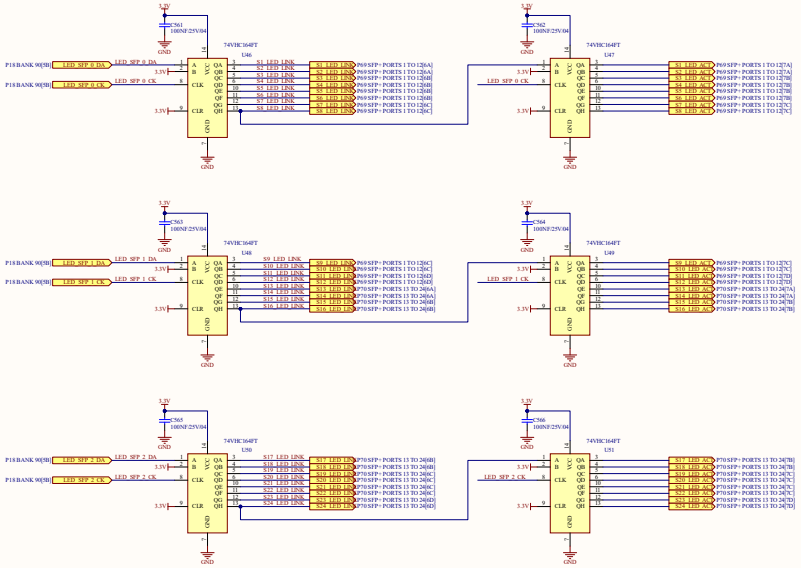

project: *N3-HTPSR5G*			***HTP Hitech Co.,Ltd***
Size: A4	Number: 46	Revision: V1	*OCT5B - 2303, Resco Urban Area*
Date: 10/1/2024	Time: 8:45:23 AM	Sheet 46of 71	*74 Pham Van Dong, Bac Tu Liem*
File: P46 LED-SERIAL-24xSFP.SchDoc			*Hanoi*

HTP

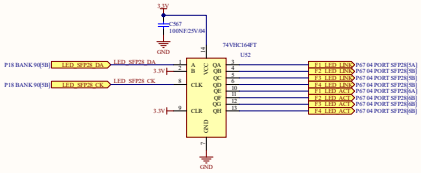

HTP	project: *N3-HTPSR5G*		**HTP Hitech Co.,Ltd** *OCT5B - 2303, Resco Urban Area* *74 Pham Van Dong, Bac Tu Liem* *Hanoi*
	Size: A4	Number: 47	Revision: V1
	Date: 10/1/2024 Time: 8:45:23 AM		Sheet 47of 71
	File: P47 LED-SERIAL-4xSFP28.SchDoc		

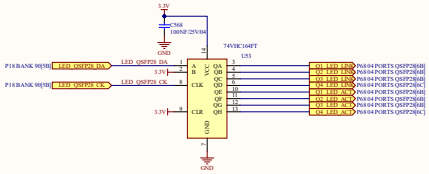

HTP	project: *N3-HTPSR5G*		***HTP Hitech Co.,Ltd*** *OCT5B - 2303, Resco Urban Area 74 Pham Van Dong, Bac Tu Liem Hanoi*
	Size: A4	Number: 48	Revision: V1
	Date: 10/1/2024 Time: 8:45:23 AM	Sheet 48 of 71	
	File: P48 LED-SERIAL-4xQSFP28.SchDoc		

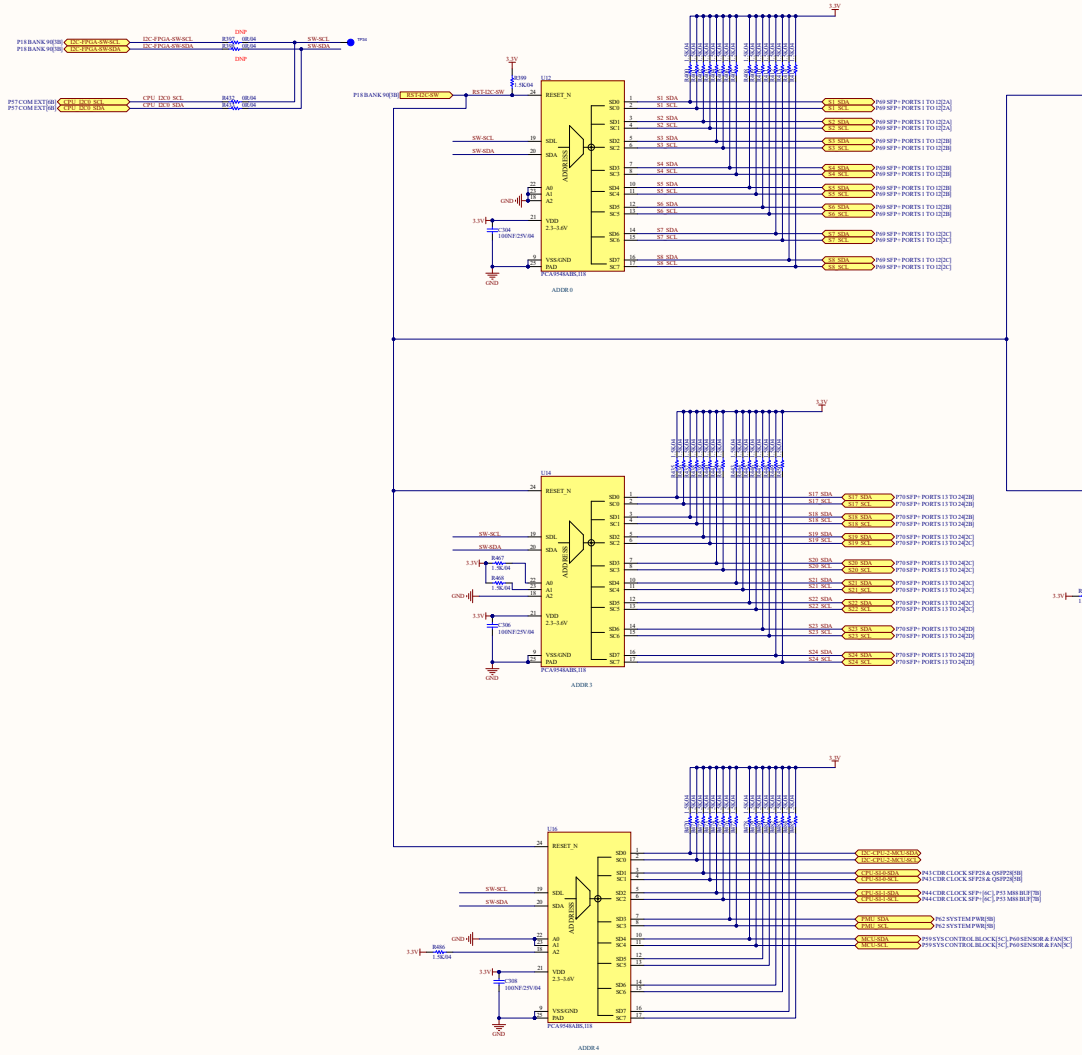

project: *N3-HTPSR5G*			**HTP Hitech Co.,Ltd**
Size: A4	Number: 49	Revision: V1	*OCT5B - 2303, Resco Urban Area*
Date: 10/1/2024 Time: 8:45:23 AM		Sheet 49of 71	*74 Pham Van Dong, Bac Tu Liem*
File: P49 SWITCHS IIC 40-CH.SchDoc			*Hanoi*

HTP

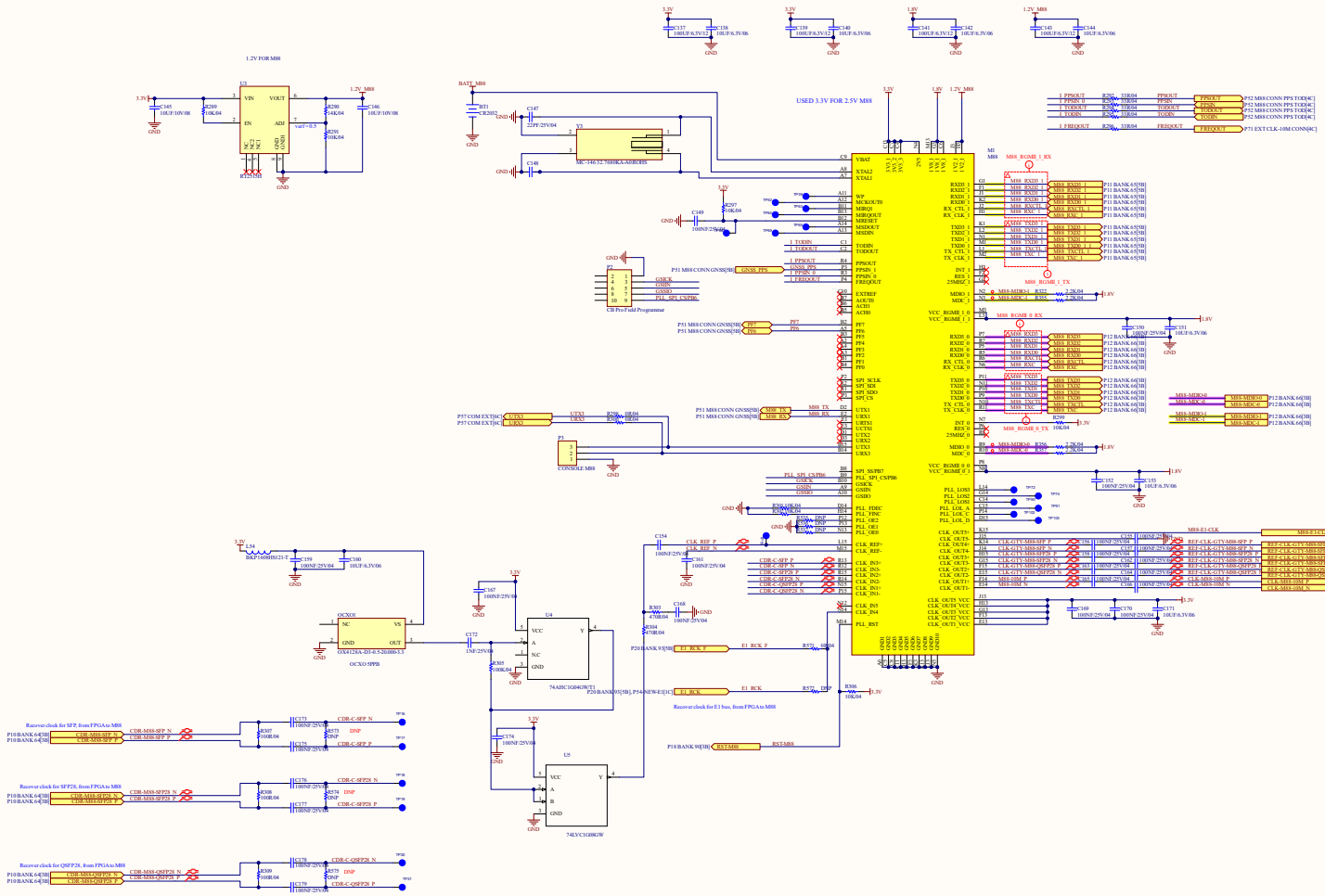

project: *N3-HTPSR5G*		***HTP Hitech Co.,Ltd***
Size: A4	Number: 50	Revision: V1	*OCT5B - 2303, Resco Urban Area*
Date: 10/1/2024 Time: 8:45:23 AM	Sheet 50of 71	*74 Pham Van Dong, Bac Tu Liem*
File: P50 M88 MODULE.SchDoc		*Hanoi*

HTP

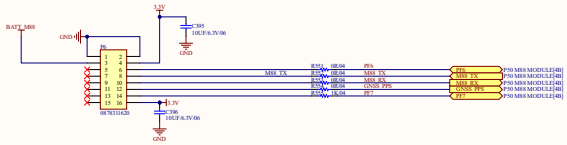

HTP	project: *N3-HTPSR5G*		**HTP Hitech Co.,Ltd** *OCT5B - 2303, Resco Urban Area* *74 Pham Van Dong, Bac Tu Liem* *Hanoi*
	Size: A4	Number: 51	Revision: V1
	Date: 10/1/2024 Time: 8:45:23 AM		Sheet 51of 71
	File: P51 M88 CONN GNSS.SchDoc		

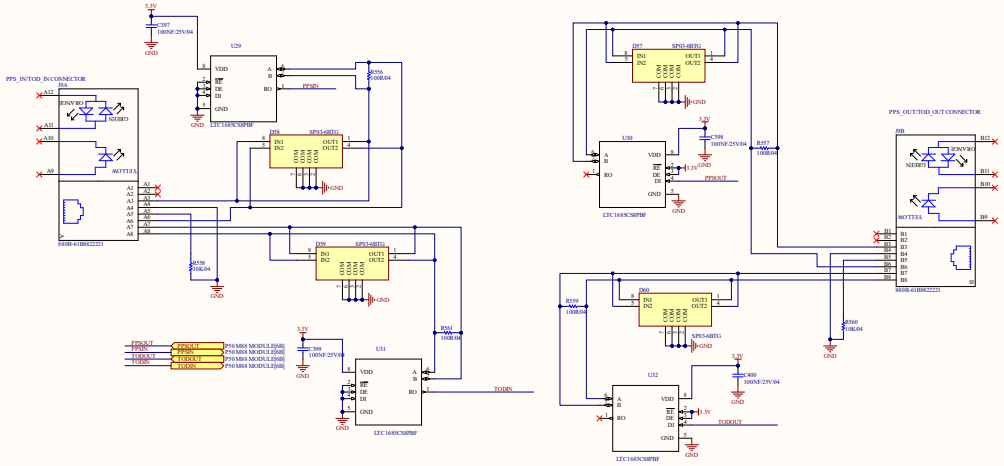

HTP	project: *N3-HTPSR5G*		**HTP Hitech Co.,Ltd** *OCT5B - 2303, Resco Urban Area 74 Pham Van Dong, Bac Tu Liem Hanoi*
	Size: A4	Number: 52	Revision: V1
	Date: 10/1/2024 Time: 8:45:23 AM		Sheet 52of 71
	File: P52 M88 CONN PPS TOD.SchDoc		

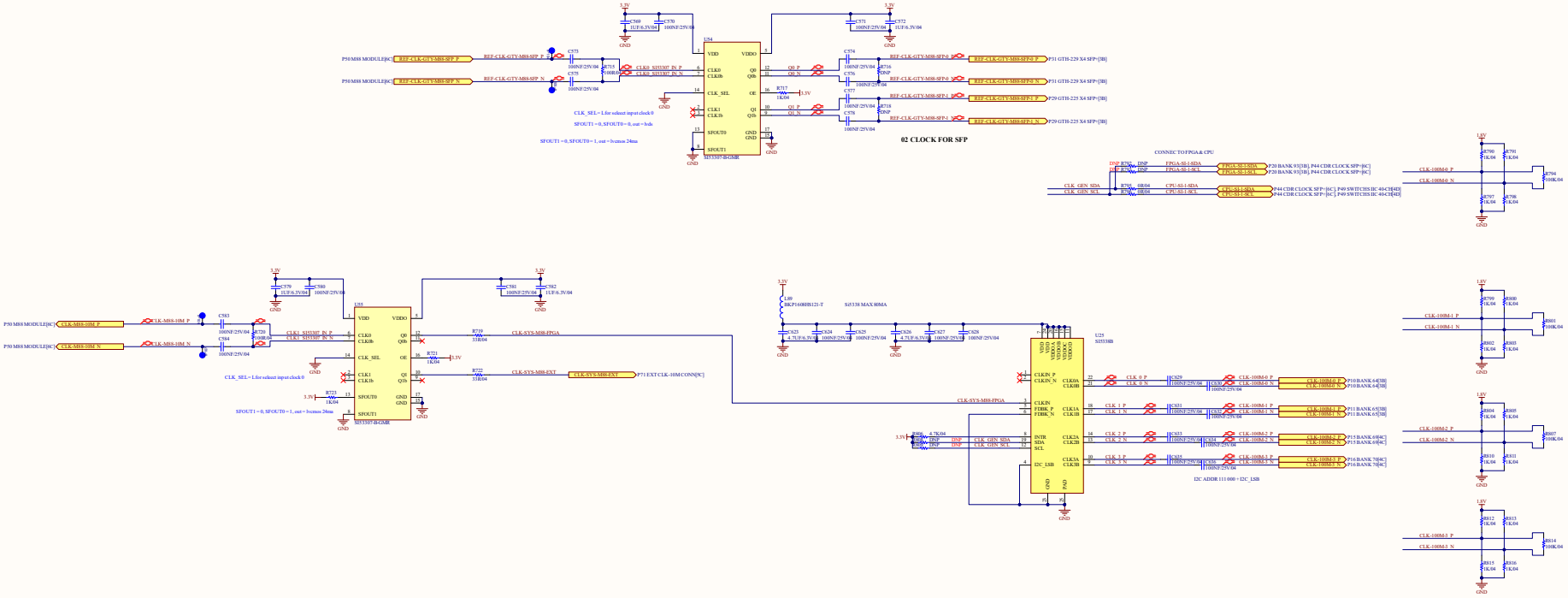

project: *N3-HTPSR5G*		**HTP Hitech Co.,Ltd**
Size: A4	Number: 53	Revision: V1	*OCT5B - 2303, Resco Urban Area*
Date: 10/1/2024 Time: 8:45:24 AM	Sheet 53 of 71	*74 Pham Van Dong, Bac Tu Liem*
File: P53 M88 BUF.SchDoc		*Hanoi*

HTP

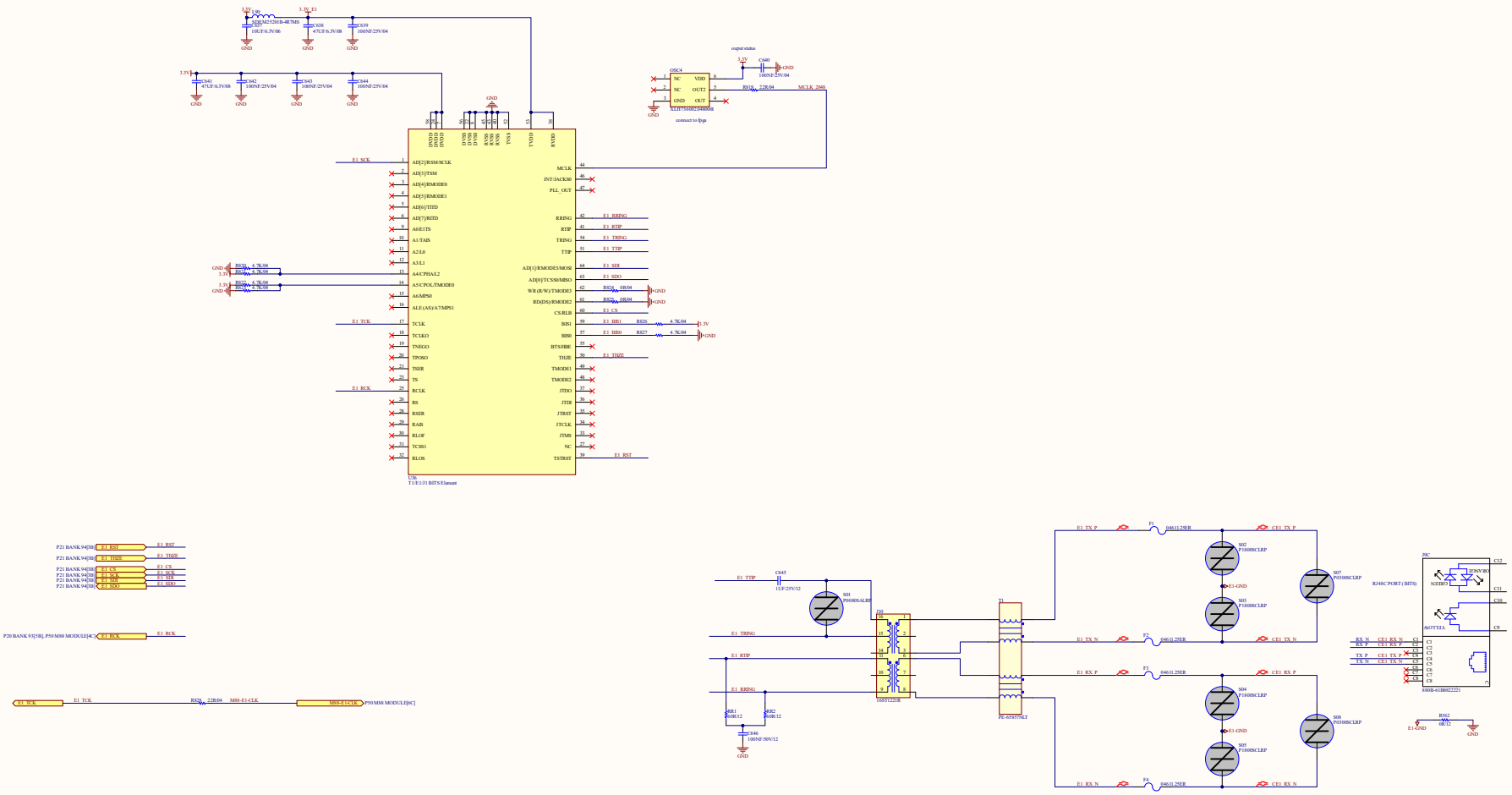

project: *N3-HTPSR5G*		
Size: A4	Number: 54	Revision: V1
Date: 10/1/2024 Time: 8:45:24 AM		Sheet 54of 71
File: P54-NEW-E1.SchDoc		

HTP

HTP Hitech Co.,Ltd
OCT5B - 2303, Resco Urban Area
74 Pham Van Dong, Bac Tu Liem
Hanoi

project: *N3-HTPSR5G*			***HTP Hitech Co.,Ltd*** *OCT5B - 2303, Resco Urban Area 74 Pham Van Dong, Bac Tu Liem Hanoi*
Size: A4	Number: 55	Revision: V1	
Date: 10/1/2024 Time: 8:45:24 AM		Sheet 55of 71	
File: P55 SECURITY IC.SchDoc			

HTP

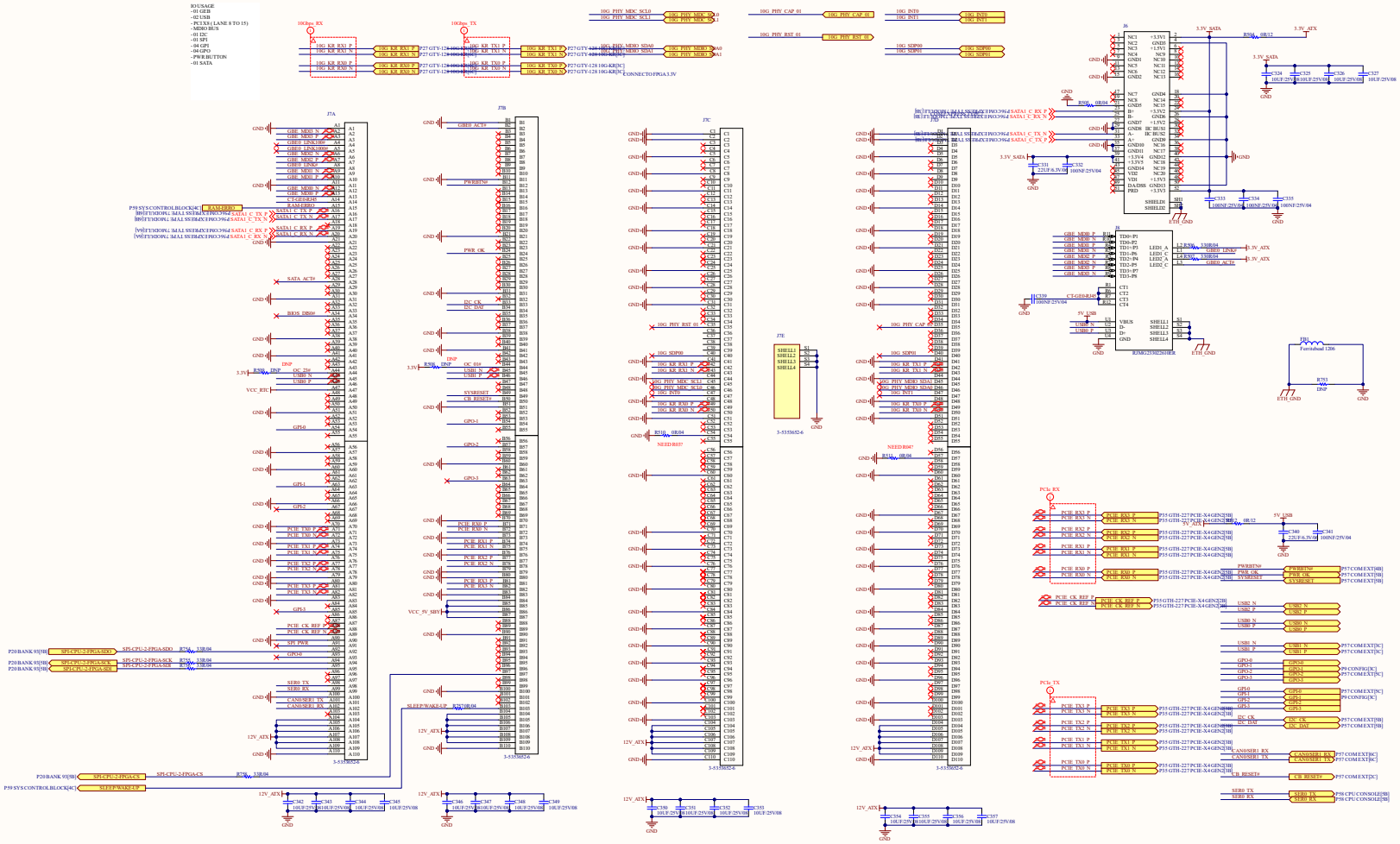

project: *N3-HTPSR5G*		
Size: A4	Number: 56	Revision: V1
Date: 10/1/2024	Time: 8:45:24 AM	Sheet 56of 71
File: P56 COM EXPRESS TYPE 7 MODULE.SchDoc		

HTP

HTP Hitech Co.,Ltd
OCT5B - 2303, Resco Urban Area
74 Pham Van Dong, Bac Tu Liem
Hanoi

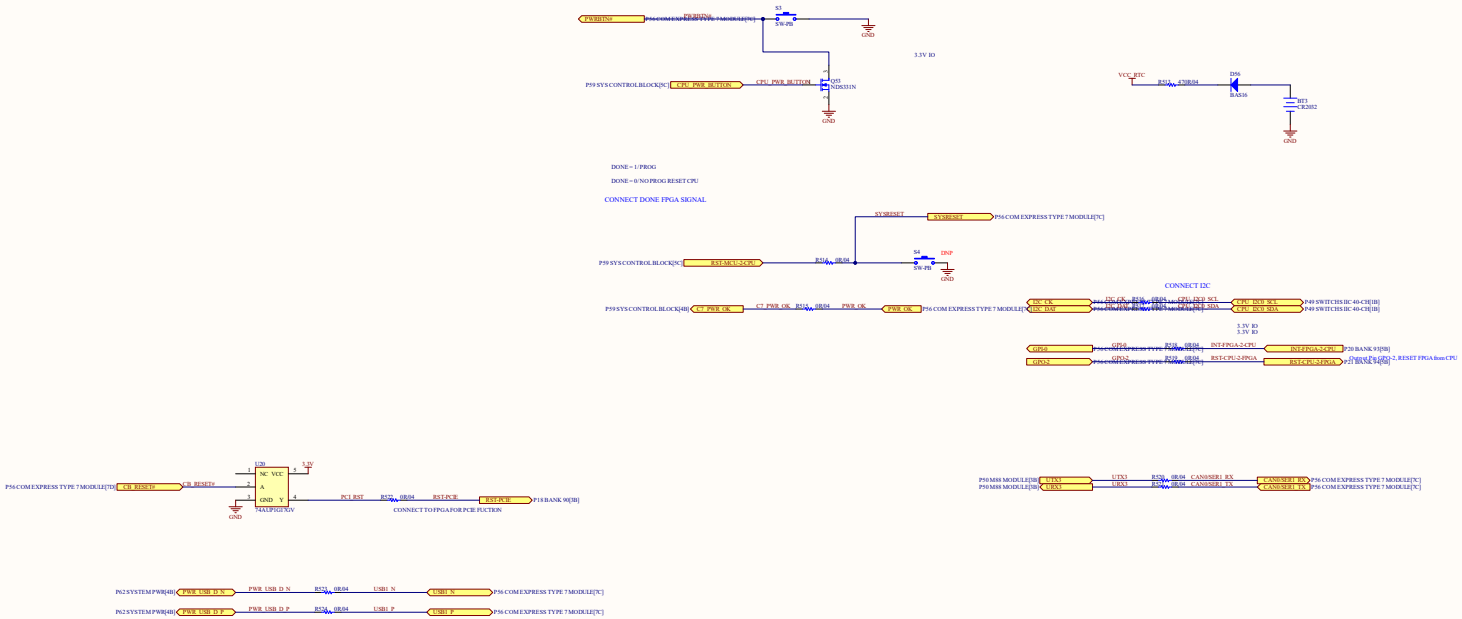

HTP	project: *N3-HTPSR5G*		**HTP Hitech Co.,Ltd** *OCT5B - 2303, Resco Urban Area* *74 Pham Van Dong, Bac Tu Liem* *Hanoi*
	Size: A4	Number: 57	Revision: V1
	Date: 10/1/2024 Time: 8:45:24 AM		Sheet 57of 71
	File: P57 COM EXT.SchDoc		

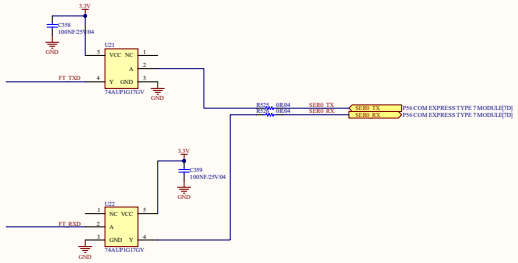

ADD GND CONNECT PIN D5 COMPOENT J9D

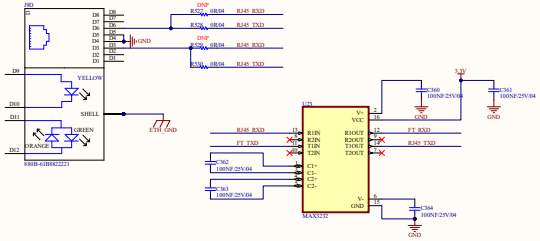

project: *N3-HTPSR5G*			***HTP Hitech Co.,Ltd*** *OCT5B - 2303, Resco Urban Area 74 Pham Van Dong, Bac Tu Liem Hanoi*
Size: A4	Number: 58	Revision: V1	
Date: 10/1/2024 Time: 8:45:24 AM		Sheet 58of 71	
File: P58 CPU CONSOLE.SchDoc			

HTP

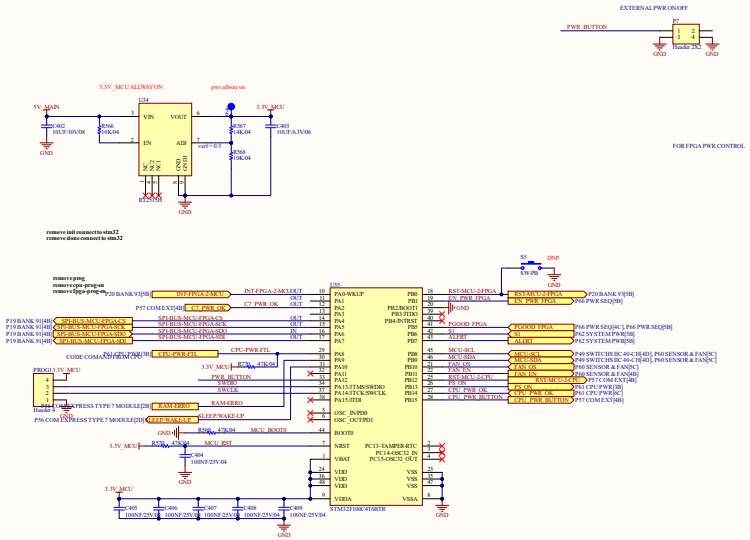

project: *N3-HTPSR5G*			***HTP Hitech Co.,Ltd*** *OCT5B - 2303, Resco Urban Area 74 Pham Van Dong, Bac Tu Liem Hanoi*
Size: A4	Number: 59	Revision: V1	
Date: 10/1/2024 Time: 8:45:25 AM		Sheet 59of 71	
File: P59 SYS CONTROL BLOCK.SchDoc			

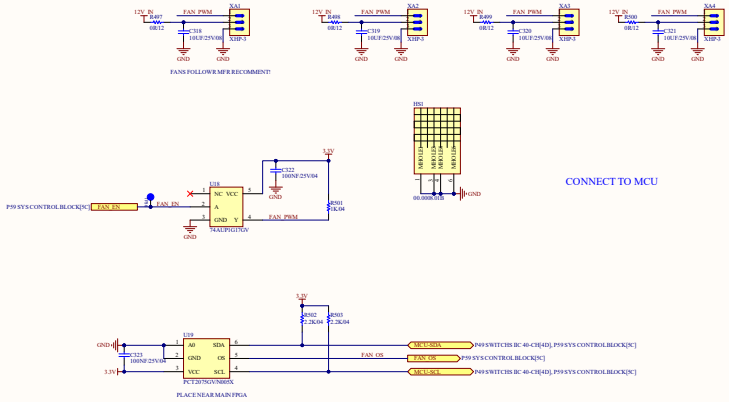

HTP	project: *N3-HTPSR5G*		***HTP Hitech Co.,Ltd*** *OCT5B - 2303, Resco Urban Area 74 Pham Van Dong, Bac Tu Liem Hanoi*
	Size: A4	Number: 60	Revision: V1
	Date: 10/1/2024 Time: 8:45:25 AM		Sheet 60of 71
	File: P60 SENSOR & FAN.SchDoc		

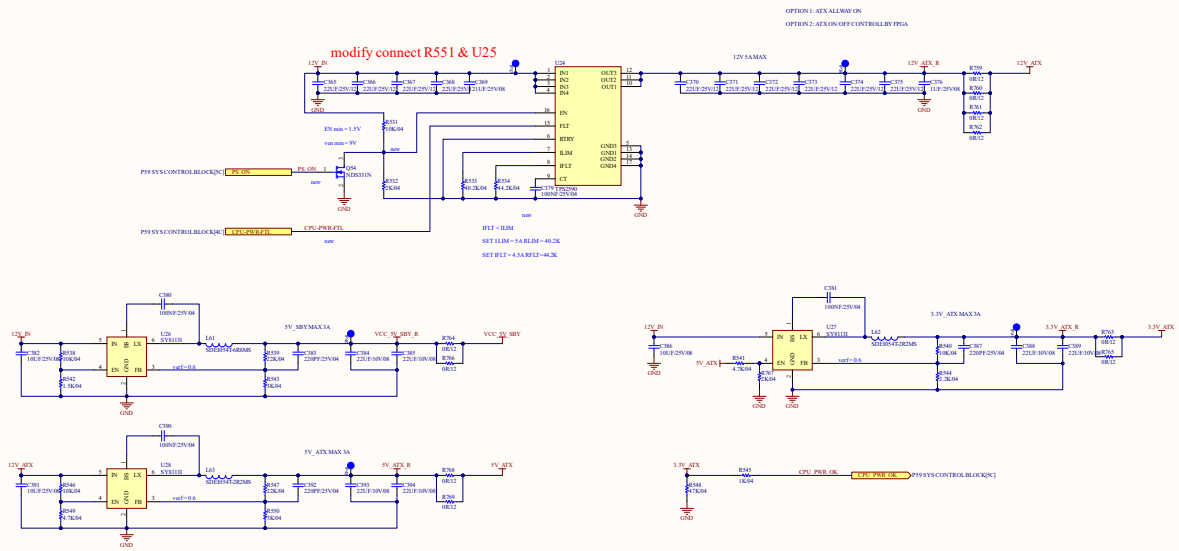

HTP	project: *N3-HTPSR5G*		***HTP Hitech Co.,Ltd*** *OCT5B - 2303, Resco Urban Area 74 Pham Van Dong, Bac Tu Liem Hanoi*
	Size: A4	Number: 61	Revision: V1
	Date: 10/1/2024 Time: 8:45:25 AM		Sheet 61of 71
	File: P61 CPU PWR.SchDoc		

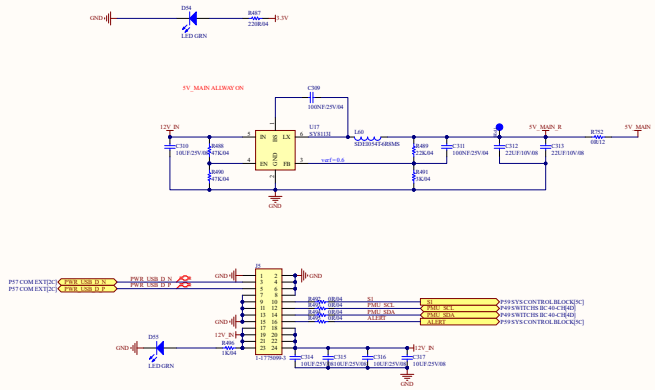

HTP	project: *N3-HTPSR5G*		**HTP Hitech Co.,Ltd** *OCT5B - 2303, Resco Urban Area* *74 Pham Van Dong, Bac Tu Liem* *Hanoi*
	Size: A4	Number: 62	Revision: V1
	Date: 10/1/2024 Time: 8:45:25 AM		Sheet 62of 71
	File: P62 SYSTEM PWR.SchDoc		

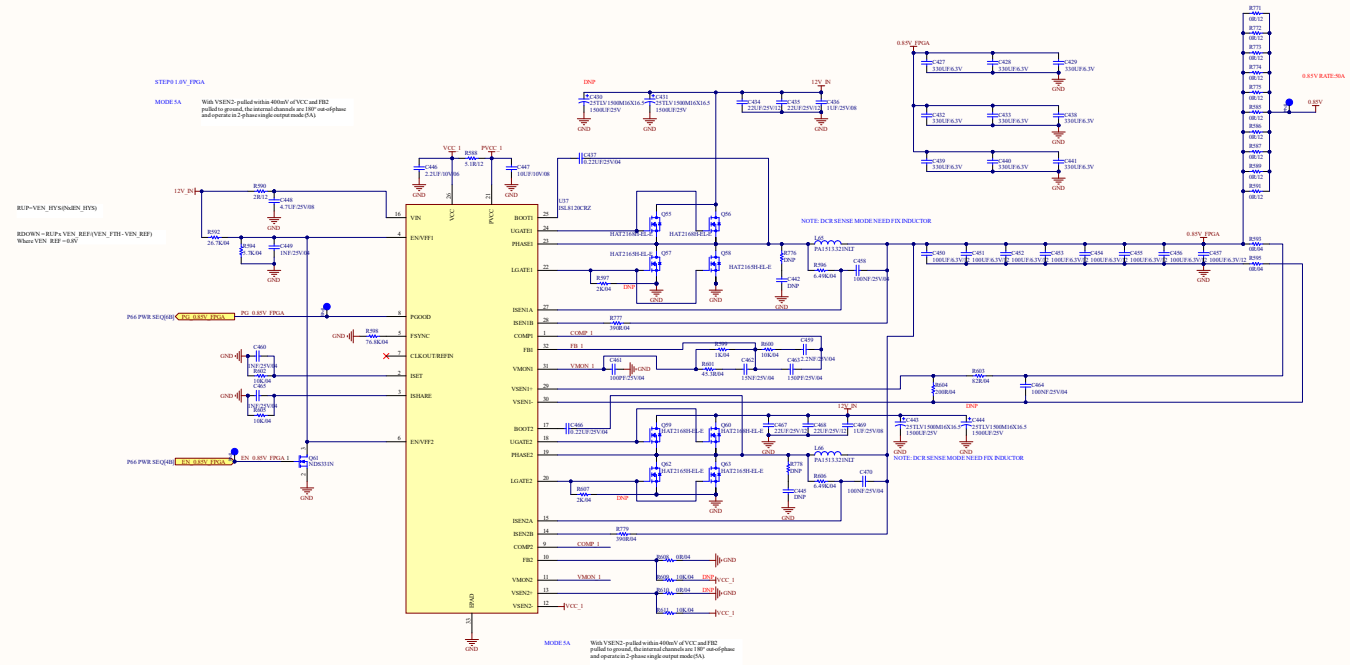

project: *N3-HTPSR5G*		**HTP Hitech Co.,Ltd**
Size: A4	Number: 63	Revision: V1
Date: 10/1/2024 Time: 8:45:25 AM	Sheet 63 of 71	*OCT5B - 2303, Resco Urban Area*
File: P63 PWR CORE FPGA 50A.SchDoc		*74 Pham Van Dong, Bac Tu Liem*
		Hanoi

HTP

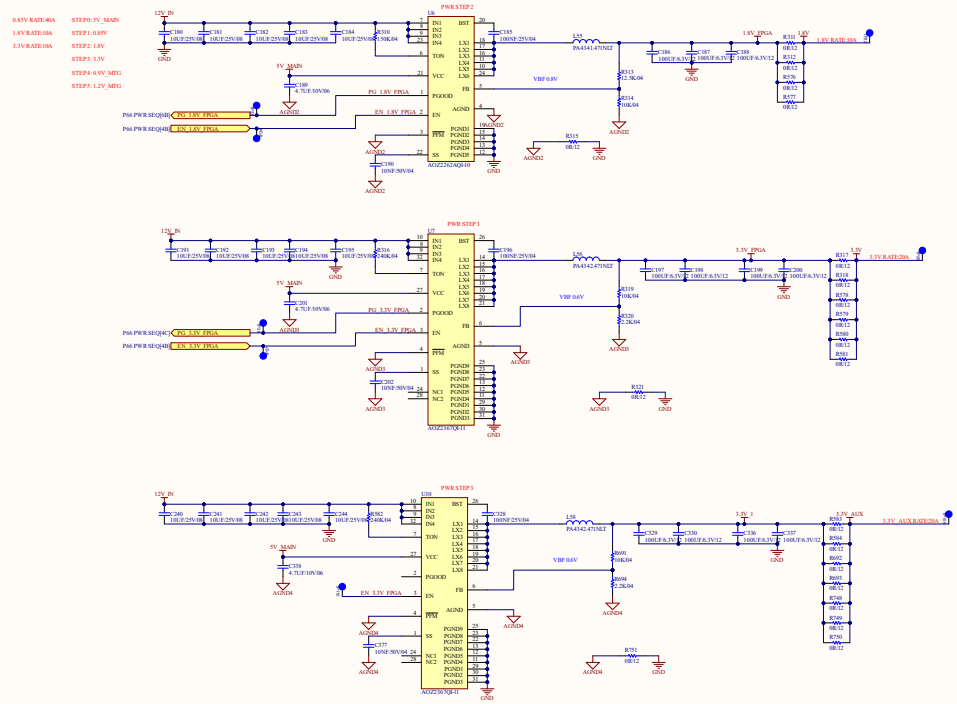

project: *N3-HTPSR5G*		**HTP Hitech Co.,Ltd** *OCT5B - 2303, Resco Urban Area 74 Pham Van Dong, Bac Tu Liem Hanoi*
Size: A4	Number: 64	Revision: V1
Date: 10/1/2024 Time: 8:45:25 AM	Sheet 64 of 71	
File: P64 PWR CORE FPGA 1.8V 3.3V.SchDoc		

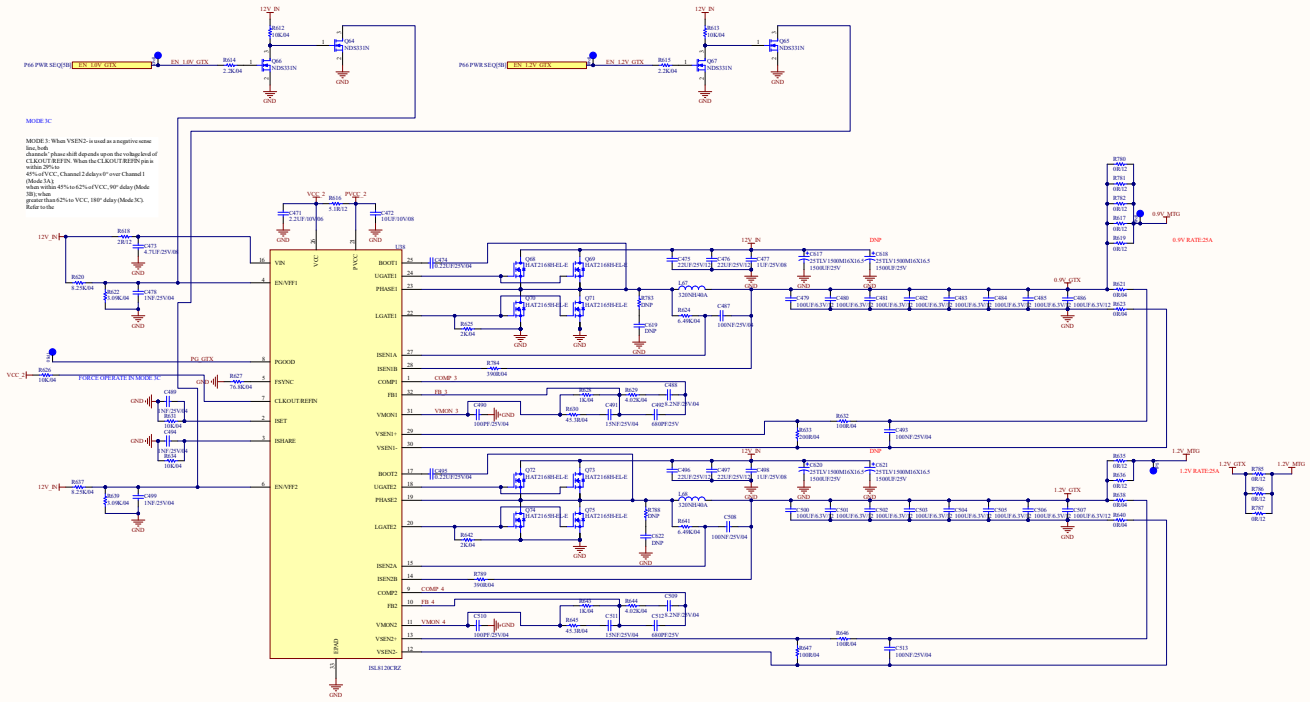

project: *N3-HTPSR5G*		**HTP Hitech Co.,Ltd**
Size: A4	Number: 65	Revision: V1
Date: 10/1/2024 Time: 8:45:25 AM		Sheet 65of 71
File: P65 PWR GTX 25A.SchDoc		

OCT5B - 2303, Resco Urban Area
74 Pham Van Dong, Bac Tu Liem
Hanoi

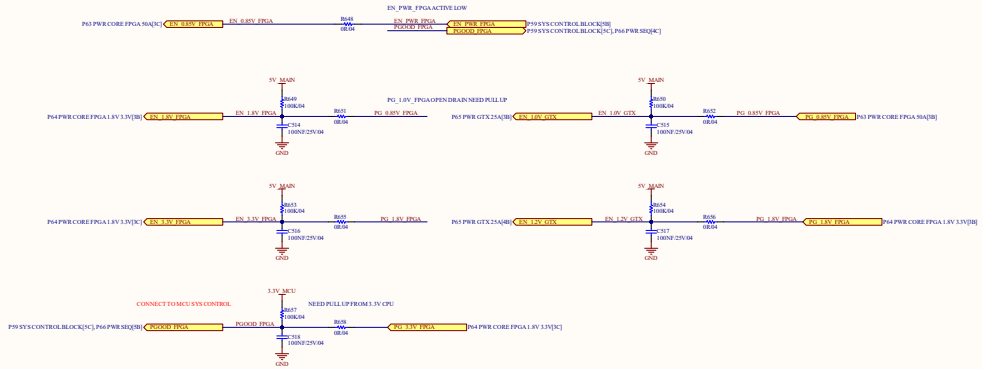

HTP	project: *N3-HTPSR5G*		**HTP Hitech Co.,Ltd** *OCT5B - 2303, Resco Urban Area* *74 Pham Van Dong, Bac Tu Liem* *Hanoi*
	Size: A4	Number: 66	Revision: V1
	Date: 10/1/2024 Time: 8:45:26 AM		Sheet 66of 71
	File: P66 PWR SEQ.SchDoc		

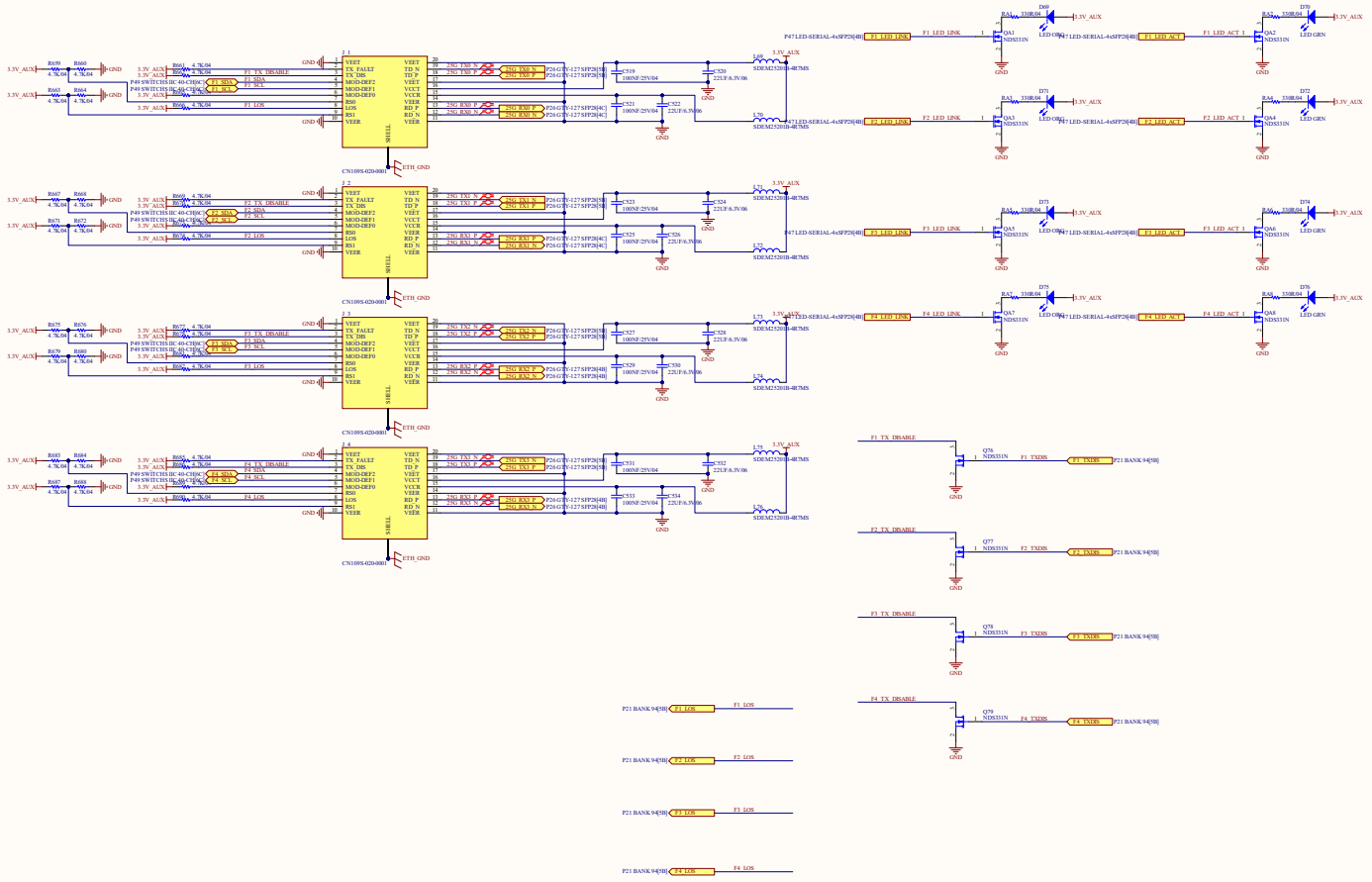

project: *N3-HTPSR5G*		
Size: A4	Number: 67	Revision: V1
Date: 10/1/2024 Time: 8:45:26 AM		Sheet 67of 71
File: P67 04 PORT SFP28.SchDoc		

HTP

HTP Hitech Co.,Ltd
OCT5B - 2303, Resco Urban Area
74 Pham Van Dong, Bac Tu Liem
Hanoi

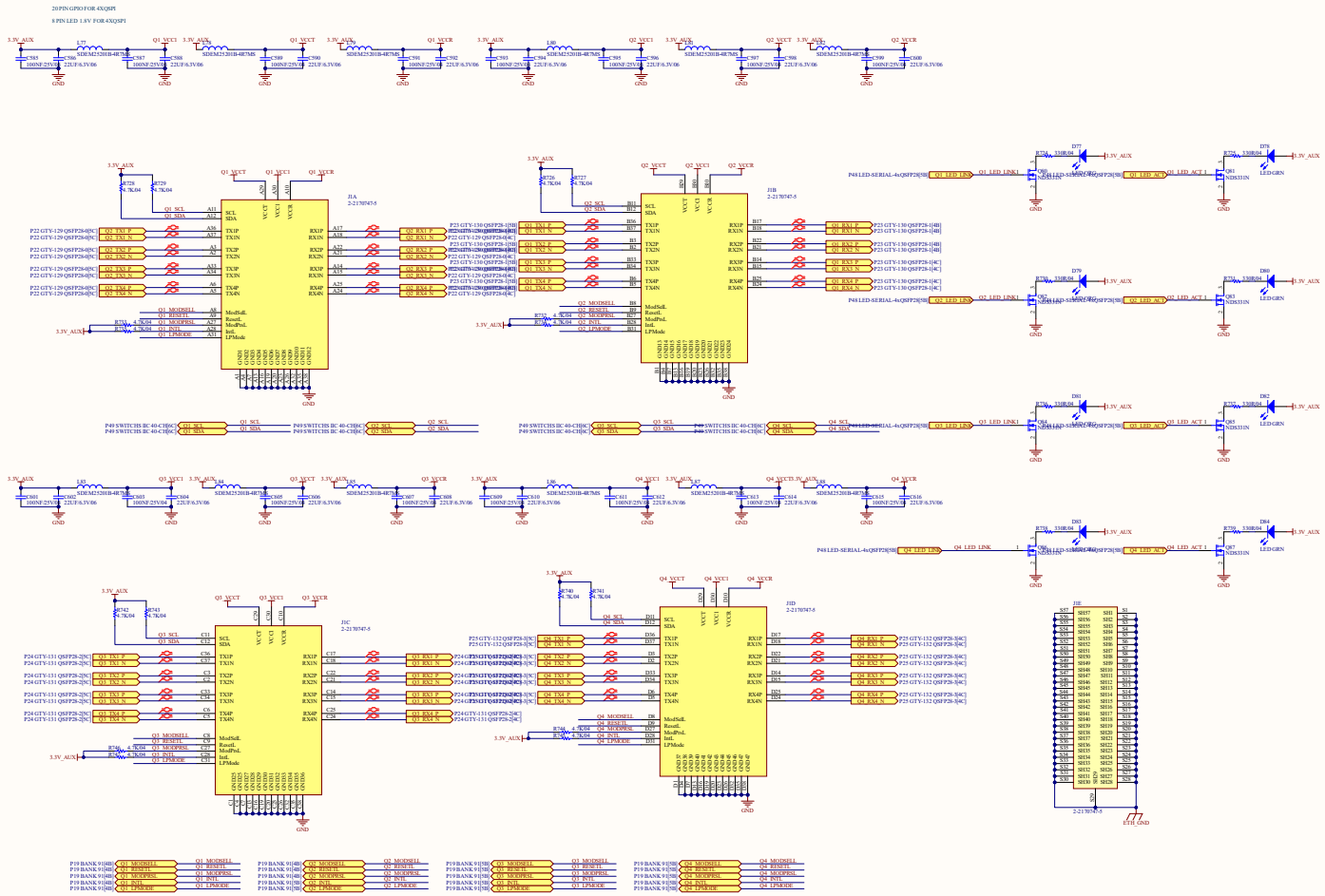

project: *N3-HTPSR5G*		**HTP Hitech Co.,Ltd**
Size: A4	Number: 68	Revision: V1
Date: 10/1/2024 Time: 8:45:26 AM		Sheet 68of 71
File: P68 04 PORTS QSFP28.SchDoc		

OCT5B - 2303, Resco Urban Area
74 Pham Van Dong, Bac Tu Liem
Hanoi

USED 24 PIN 3.3V FOR RX_LOS

USED 72 PIN 1.8V FOR TX_DIS + LED_LINK, LED_ACT

TXDIS & LED_LINK & LED_ACT USED 1.8V GPIO

RX_LOS USED 3.3V GPIO

used MWSA seri inductor 4.7uh rate 1A

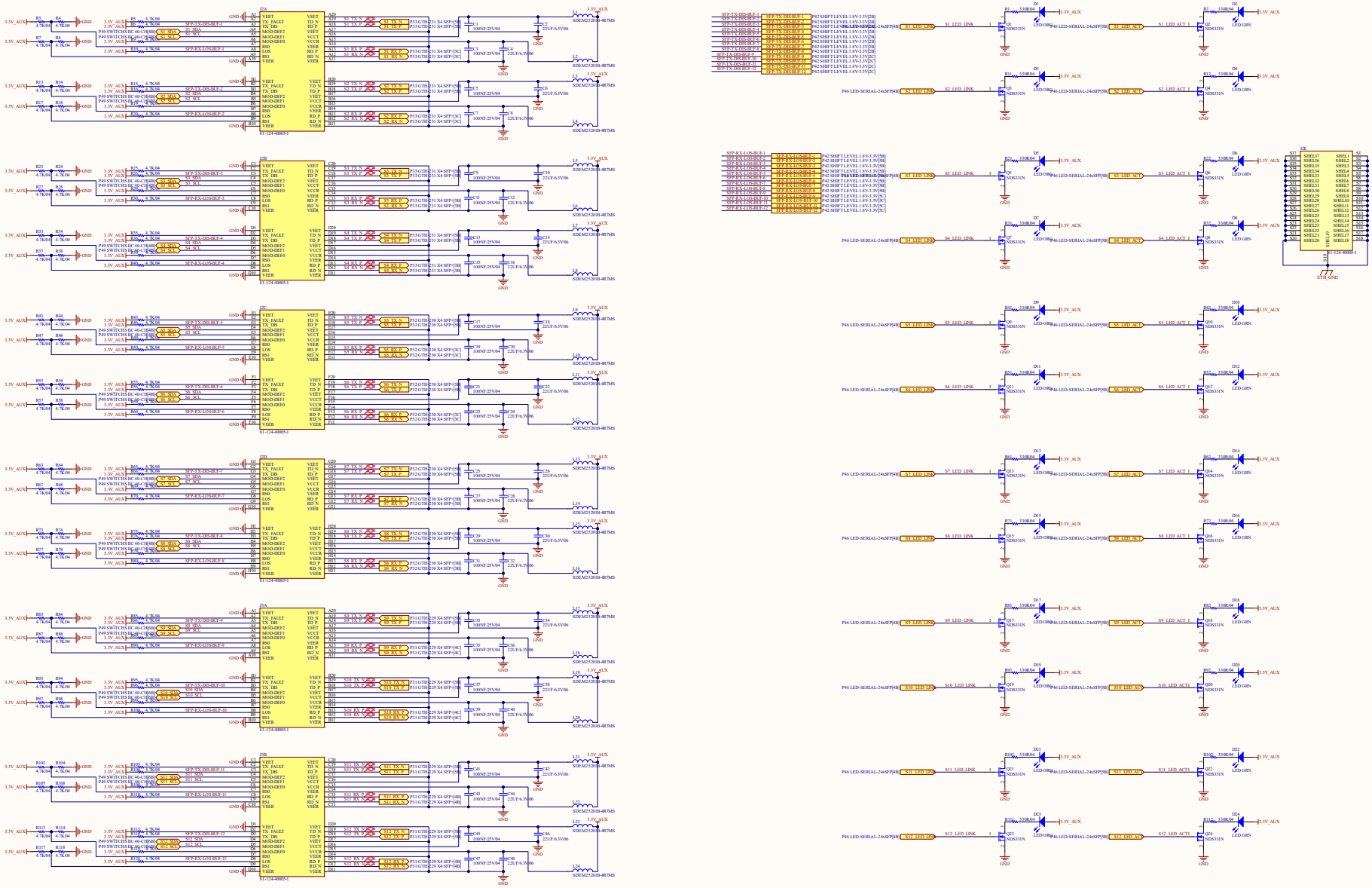

project: *N3-HTPSR5G*		
Size: A4	Number: 69	Revision: V1
Date: 10/1/2024 Time: 8:45:26 AM		Sheet 69of 71
File: P69 SFP+ PORTS 1 TO 12.SchDoc		

HTP Hitech Co.,Ltd
OCT5B - 2303, Resco Urban Area
74 Pham Van Dong, Bac Tu Liem
Hanoi

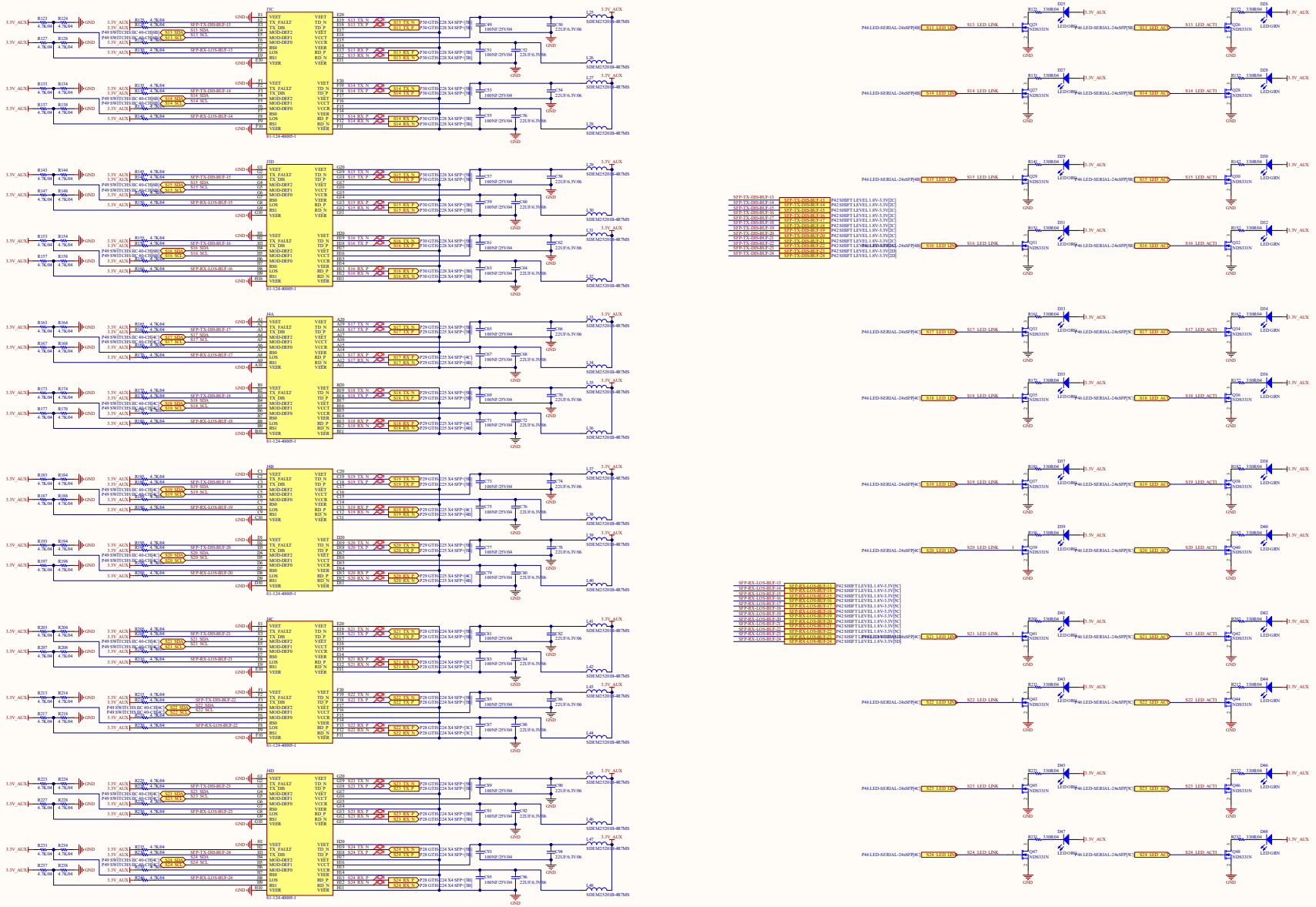

project: *N3-HTPSR5G*			**HTP Hitech Co.,Ltd**
Size: A4	Number: 70	Revision: V1	*OCT5B - 2303, Resco Urban Area*
Date: 10/1/2024	Time: 8:45:27 AM	Sheet 70of 71	*74 Pham Van Dong, Bac Tu Liem*
File: P70 SFP+ PORTS 13 TO 24.SchDoc			*Hanoi*

HTP

HTP	project: *N3-HTPSR5G*		**HTP Hitech Co.,Ltd** *OCT5B - 2303, Resco Urban Area* *74 Pham Van Dong, Bac Tu Liem* *Hanoi*
	Size: A4	Number: 71	Revision: V1
	Date: 10/1/2024 Time: 8:45:27 AM		Sheet 71of 71
	File: P71 EXT CLK-10M CONN.SchDoc		