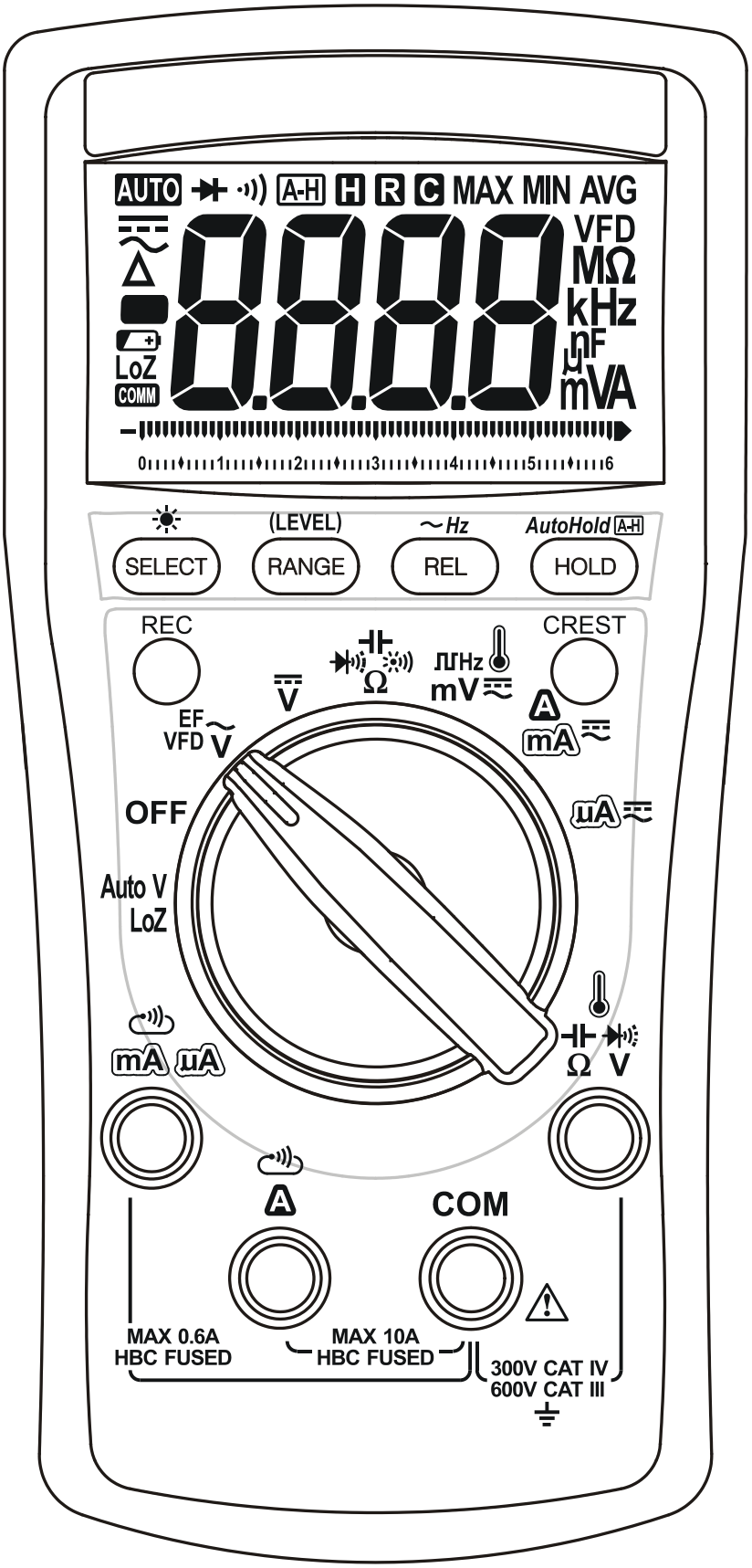

USER'S MANUAL

BM2257
BM2251

Digital Multimeter

BRYMEN®

1) SAFETY

This manual contains information and warnings that must be followed for operating the meter safely and maintaining the meter in a safe operating condition. If the meter is used in a manner not specified by the manufacturer, the protection provided by the meter may be impaired.

Observe proper safety precautions when working with voltages above 30 Vrms, 42.4 Vpeak, or 60 VDC. These voltage levels pose a potential shock hazard to the user. Disconnect the test leads from test points before changing functions. Do not expose this product to rain or moisture. The meter is intended only for indoor use. Individual protective equipment must be used if hazardous live parts in the installation where measurement is to be carried out could be accessible.

Keep your hands/fingers behind the hand/finger barriers (of the meter and the test probe assembly, where applicable) that indicate the limits of safe access of the hand-held parts during measurements. Inspect lead wires, connectors, and probes periodically for damaged insulation or exposed metal. If any defects are found, replace them immediately.

Only use the test probe assembly provided with the meter or a UL Listed test probe assembly with the same meter ratings or better. Optional offers premium test probe assembly using silicone lead wire insulation, at our agent's discretion, is equipped with white inner insulation layers as wear indicators. Replace them immediately if any of the white layers has become visible.

The meter meets IEC/EN/BSEN/CSA_C22.2_No./UL standards of 61010-1 Ed. 3.1 and 61010-2-033 Ed. 2.0 to Measurement CAT III 600V and CAT IV 300V. The accompanied test probe assembly meets IEC/EN/BSEN/CSA_C22.2_No./UL standards of 61010-031 Ed. 2.0 to the same meter ratings or better.

The 61010-031 requires exposed conductive test probe tip length to be ≤ 4mm for CAT III & CAT IV (≤ 19mm for CAT II) ratings. The accompanied add-on caps (or permanent insulated tips option) must then be used for applications in CAT III & CAT IV areas. Refer to the category markings on your probe assemblies as well as on the add-on accessories (like detachable Caps or Alligator Clips), if any, for applicable rating changes.

INTERNATIONAL SYMBOLS

Marking of Electrical and Electronic Equipment (EEE). Do not dispose of this product as unsorted municipal waste. Contact a qualified recycler

Refer to the explanation in this Manual

Possibility of electric shock

Earth (Ground)

Meter protected throughout by Double Insulation or Reinforced Insulation

Fuse

Direct Current (DC)

Alternating Current (AC)

Three-phase Alternating Current

Application of current sensor to and removal from Hazardous Live Uninsulated Conductors is permitted

BRIEF INFORMATION ON MEASUREMENT CATEGORIES

Measurement Category IV is applicable to test and measuring circuits connected at the source of the building's low-voltage MAINS installation. Examples are measurements on devices installed before the main fuse or circuit breaker in the building installation.

Measurement Category III is applicable to test and measuring circuits connected to the distribution part of the building's low-voltage MAINS installation. Examples are measurements on distribution boards (including secondary electricity meters), photovoltaic panels, wiring and stationary motors in the fixed installation, and equipment for industrial use.

Measurement Category II is applicable to test and measuring circuits connected directly to utilization points (socket outlets and similar points) of the low-voltage MAINS installation. Examples are measurements on MAINS CIRCUITS of household appliances, portable TOOLS and similar equipment, and on the consumer side only of socket-outlets in the fixed installation.

2) EUROPEAN DIRECTIVES AND UK STATUTORY REQUIREMENTS

The instruments conform to EUROPEAN (CE) Low-Voltage Directive 2014/35/EU, Electromagnetic Compatibility Directive 2014/30/EU, and RoHS 2 Directive 2011/65/EU plus amendment Directive (EU) 2015/863. The instruments also conform to the UK (UKCA) Electrical Equipment (Safety) Regulations 2016, Electromagnetic Compatibility Regulations 2016, and The Restriction of the Use of Certain Hazardous Substances in Electrical and Electronic Equipment Regulations 2012.

3) PRODUCT DESCRIPTION

This user's manual uses only representative model(s) for illustrations. Please refer to detailed specifications for function availability to a particular model.

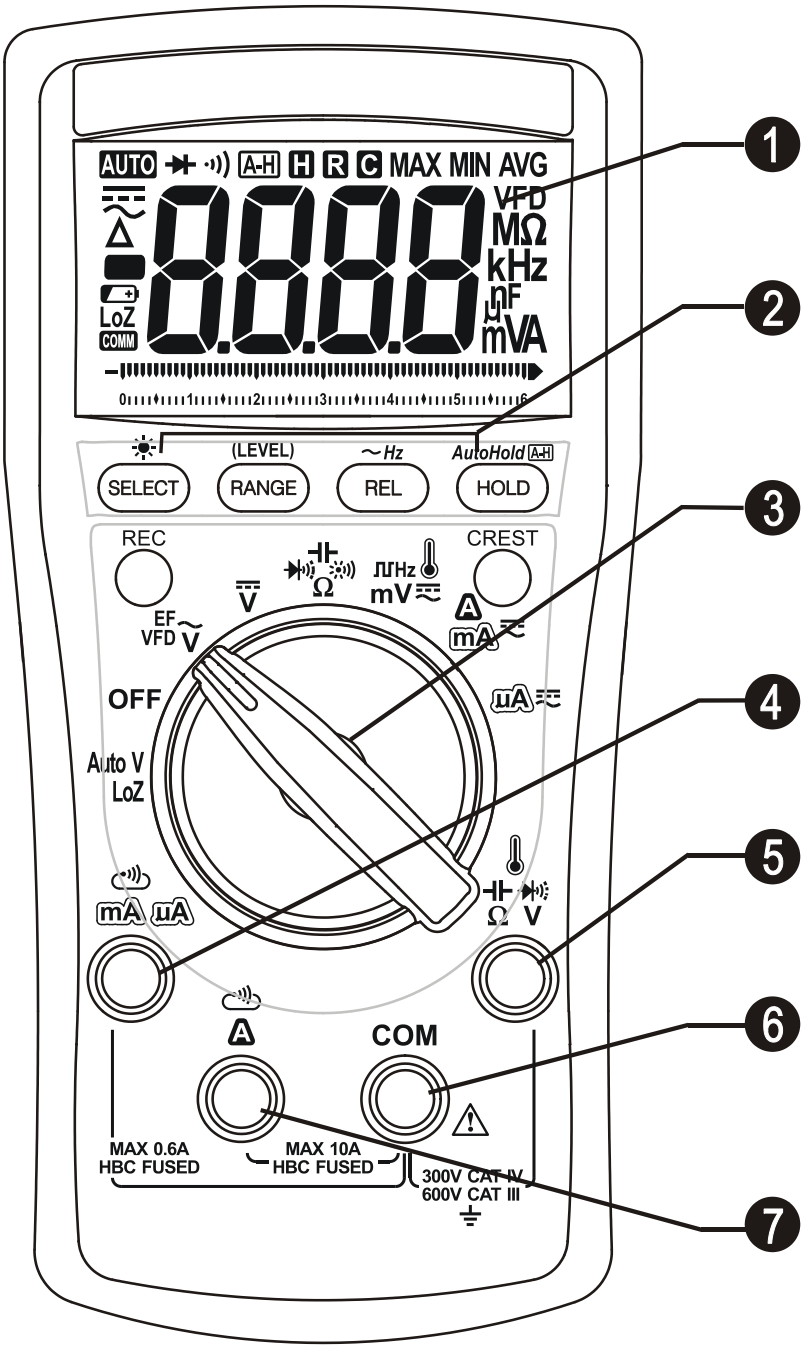

1) 3-5/6 digits 6000 counts display

2) Push-buttons for special functions & features

3) Selector to turn the Power On or Off and Select a function

4) Positive Input Jack for mA/µA functions

5) Positive Input Jack for all functions EXCEPT A, µA/mA, and non-contact EF

6) Common/Negative (Ground reference) Input Jack for all functions EXCEPT non-contact EF

7) Positive Input Jack for A function

Analog bar-graph

The analog bar graph provides a visual indication of measurement like a traditional analog meter needle. It is excellent at detecting faulty contacts, identifying potentiometer clicks, and indicating signal spikes during adjustments.

4) OPERATION

NOTE:

● *Before and after hazardous voltage measurements, test the voltage function on a known source such as line voltage to determine proper meter functioning.*

● *Long-press (a button): press for one second or more*

● *Short-press (a button): press momentarily and release*

LoZ AutoV (Model 2257 only)

Inputs are made via the test lead terminals **V-COM**. AutoV automatically selects the measurement functions of DCV or ACV based on their input levels via the test leads. The input also provides a low ramp-up impedance (LoZ) to drain ghost voltages.

◎ With no input, the meter displays "**Auto**" when it is ready.

◎ When a signal above the voltage threshold of 1.5V DC or AC up to the rated 600V is present, the meter displays the voltage value in the appropriate type DC or AC, whichever is larger in peak magnitude.

◎ Only **HOLD** & **AutoHold** push-button features are available in AutoV mode.

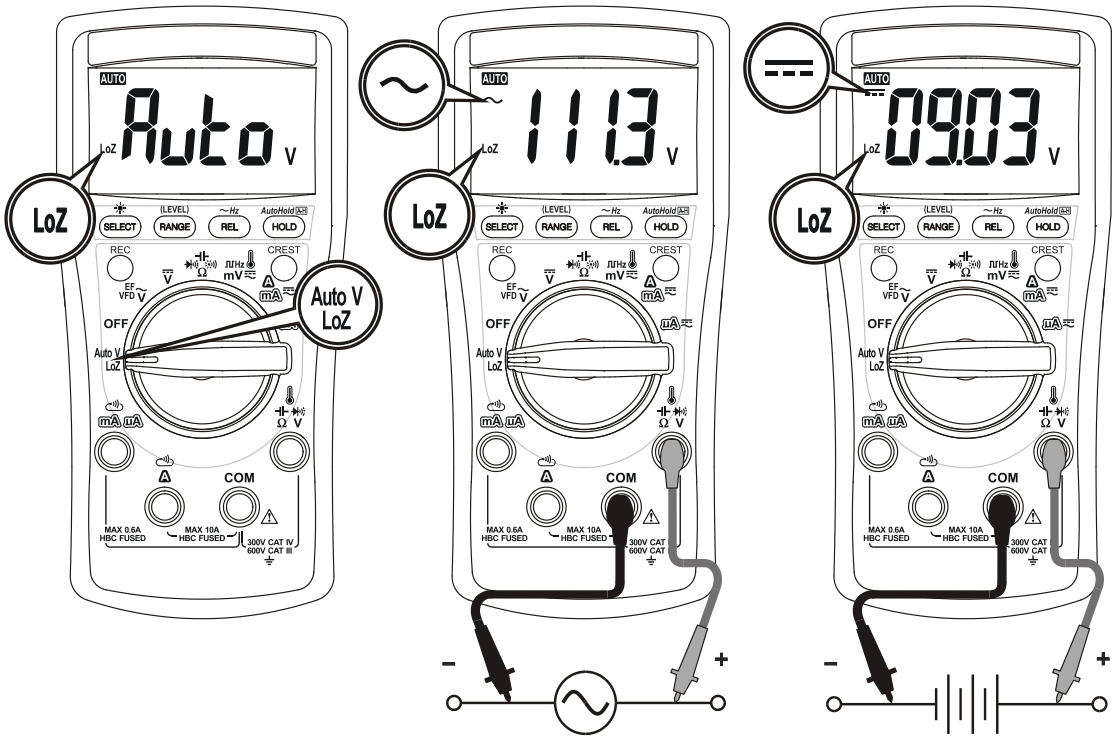

NOTE:

● ***Ghost-voltage Buster:*** *Ghost-voltages are unwanted stray signals coupled from adjacent hard signals which confuse common multimeter voltage measurements. The AutoV mode provides low (ramp-up) input impedance (approx. 2.1kΩ at low voltage) to drain ghost voltages leaving mainly hard signal values on meter readings. It is an*

invaluable feature for precise indication of hard signals, such as distinguishing between hot and open wires (to neutral) in electrical installation applications.

● ***AutoV Mode*** *input impedance increases abruptly from an initial 2.1kΩ to a few hundred kΩ on high-voltage hard signals. "**LoZ**" displays on the LCD to remind the users of being in such a low impedance mode. Peak initial load current, while probing 600VAC for example, can be up to 404mA (600V x 1.414 / 2.1kΩ), decreasing abruptly to approx. 3.5mA (600V x 1.414 / 240kΩ) within a fraction of a second. Do not use AutoV mode on circuits that could be damaged by such low input impedance. Instead, use rotary selector* $\tilde{\mathbf{V}}$ *or* $\overline{\tilde{\mathbf{V}}}$ *high input impedance voltage modes to minimize the test loadings for such circuits.*

ACV; VFD-ACV; EF-Detection

Inputs are made via the test lead terminals **V-COM** EXCEPT for the EF-Detection functions as specified later. Short-press the **SELECT** button to select the subject functions in sequence. The last selection will be saved as power-up default for repeat measurement convenience.

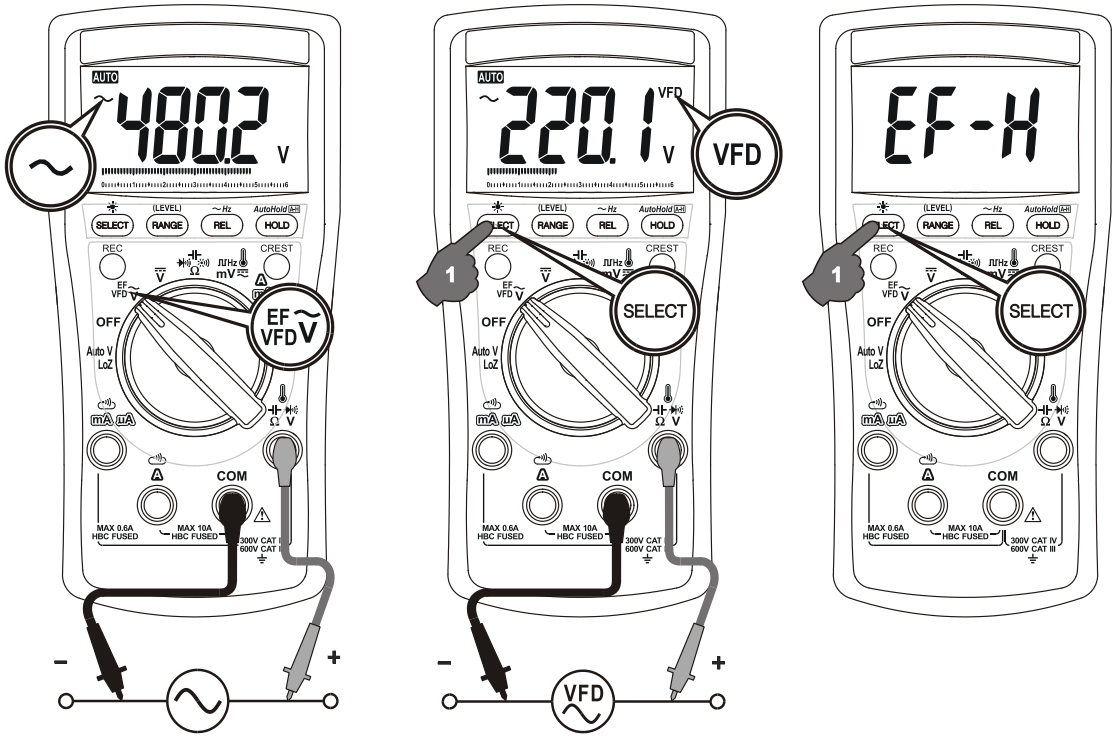

◎ **EF-Detection** defaults to "**EF-H**", the High sensitivity, when it is ready. If it is too sensitive for your applications, short-press the **(LEVEL)** button to toggle to **EF-L**, the Low sensitivity. The detected Electric Field is indicated as a series of display bar-segments, backlight flashing, and beep sounds in proportion to the field strength.

- **Non-Contact EF-Detection (NCV):** An antenna is located along the top-right corner of the meter, which detects the electric field surrounding energized

conductors. It is ideal for tracing live wiring connections, locating wiring breakages, and distinguishing between live and earth connections.

- **Probe-Contact EF-Detection (Single-Pole):** For more precise indications of live wires, such as distinguishing between live and ground connections, use one single test probe to test via the terminal **COM** by direct metal contact probing to achieve the most distinctive indications.

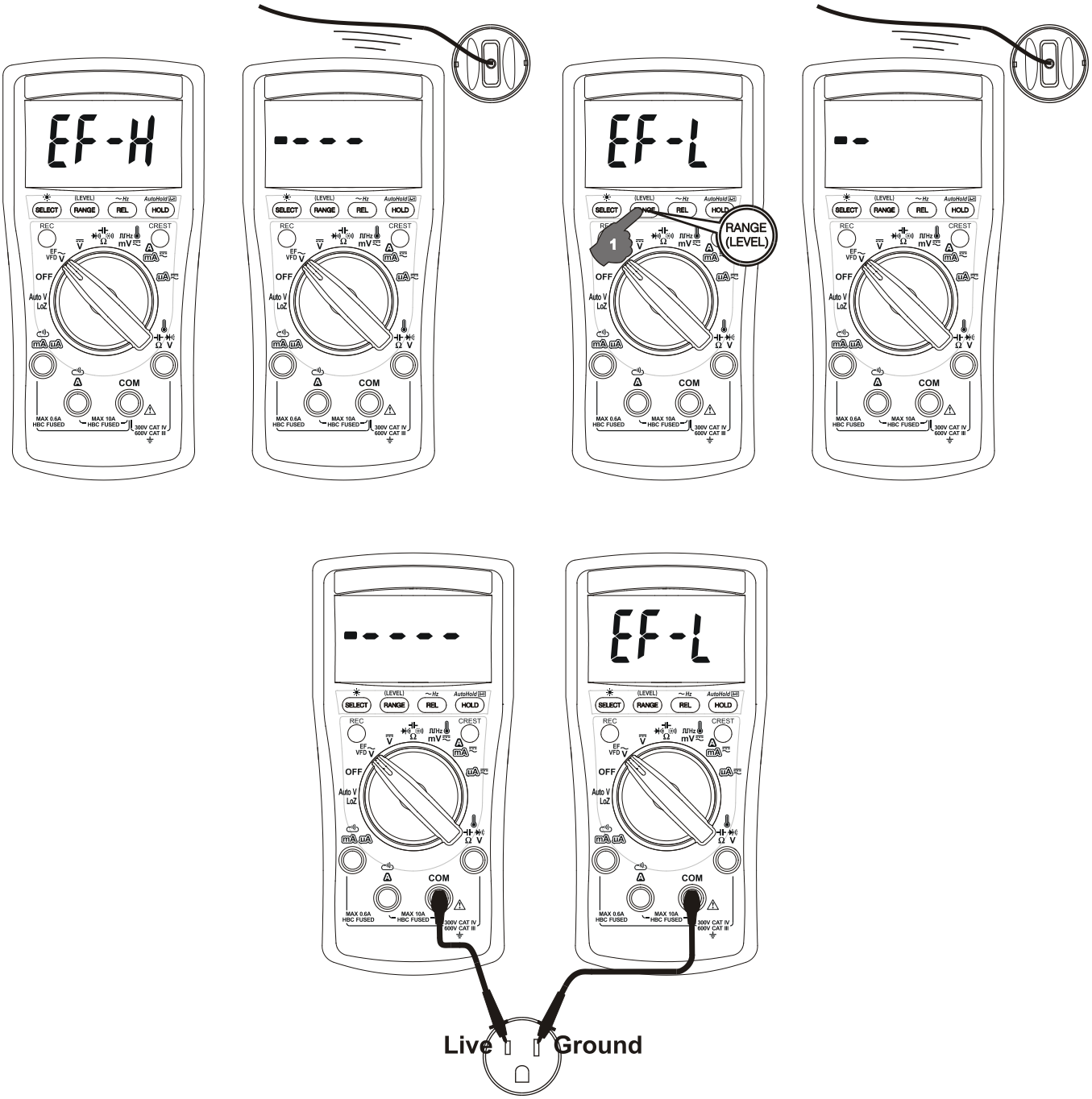

~Hz Line Frequency

This function is only available to the ACV, VFD-ACV, DCV, μA, mA, & A functions. Long-press the ***~Hz*** button to toggle to the Line Frequency function. The input sensitivity varies according to the available function range selected on which the ~Hz function is activated. Trigger Level 0 is the highest sensitivity while Level 3 is the lowest. Short-press the **RANGE (LEVEL)** button can manually select the available Trigger Levels (see details in the specification section) in sequence.

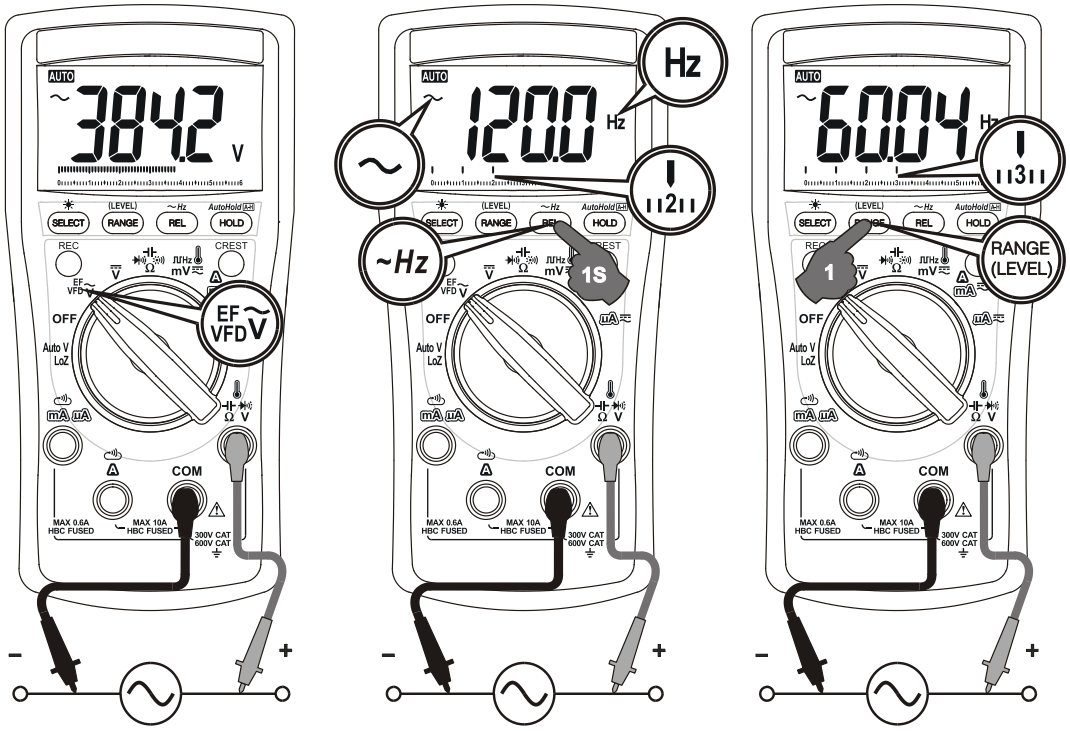

NOTE: *It is recommended to start testing with the selected available function on the signal-under-test in auto-ranging mode before activating the ~Hz function for an appropriate trigger level automatically. If the ~Hz reading is unstable, manually select lower sensitivity to avoid possible electrical noises. If the reading shows zero, manually select higher sensitivity for the measurement.*

DCV

Inputs are made via the test lead terminals **V-COM**.

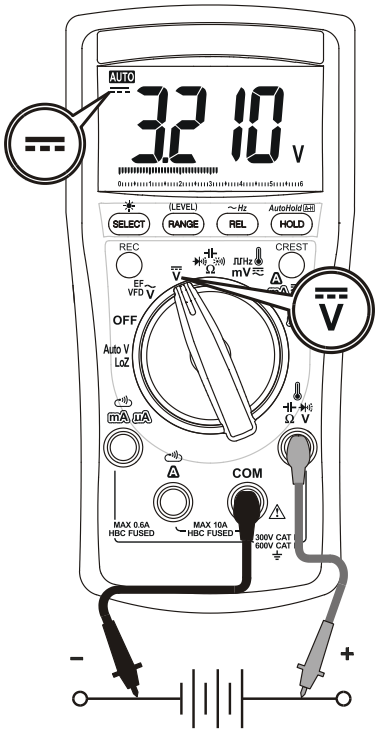

DCmV; ACmV; Logic ⎍⎍Hz; °C/°F (Model 2257 only)

Inputs are made via the test lead terminals **V-COM**. Short-press the **SELECT** button to select the subject functions in sequence. The last selection will be saved as power-up default for repeat measurement convenience. **°F** selection can be left out as factory calibration default for countries that only accept metric units.

NOTE:

● *Be sure to insert the banana-plug type-K temperature bead-probe with correct* **+ –** *polarities. Banana-pins to type-K socket adapter Bkb32 (Optional purchase) can be used to accept other type-K probes with standard miniature plugs.*

● *Temperature accuracies assume the meter interior has the same temperature (isothermal stage) as the ambient, particularly at the plug of the probe being used, for a correct junction voltage compensation. Allow the meter's interior temperature to catch up with that of the plug after any significant changes in the measuring environment and hence the ambient temperature. This can take up to an hour, for changes > 5°C, within a low-ventilated sturdy meter housing. The uncompensated temperature differences, if any, will be reflected as offsets on the meter readings.*

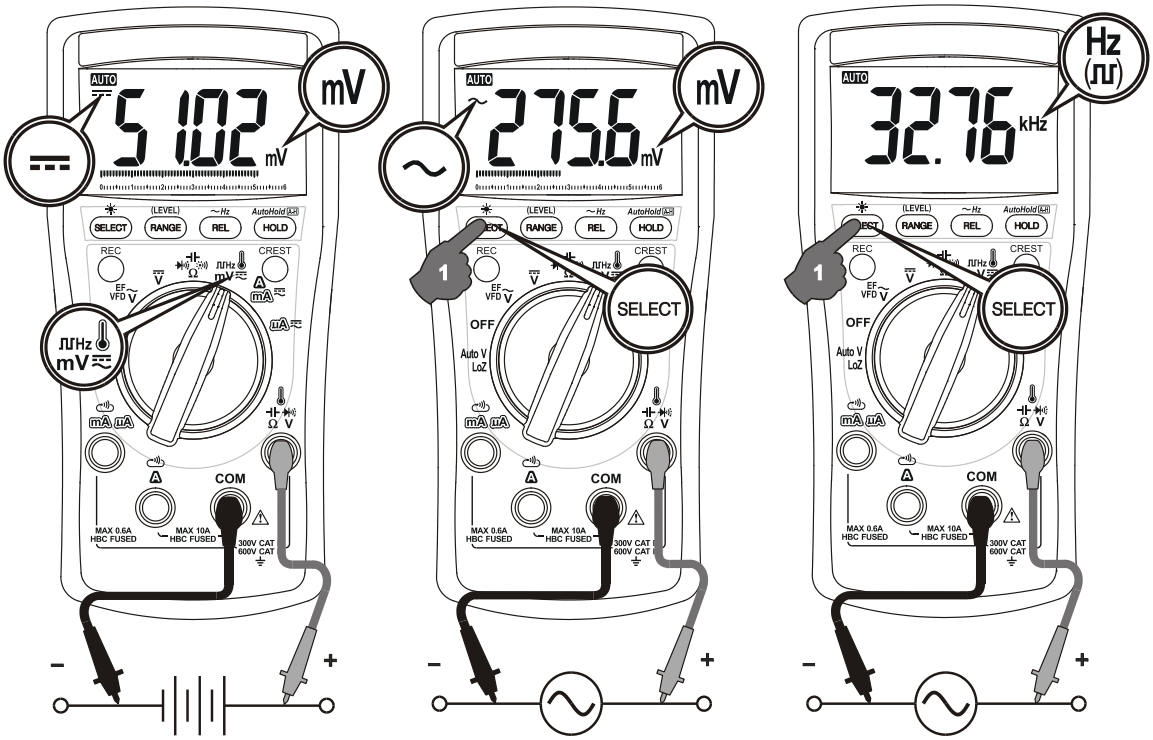

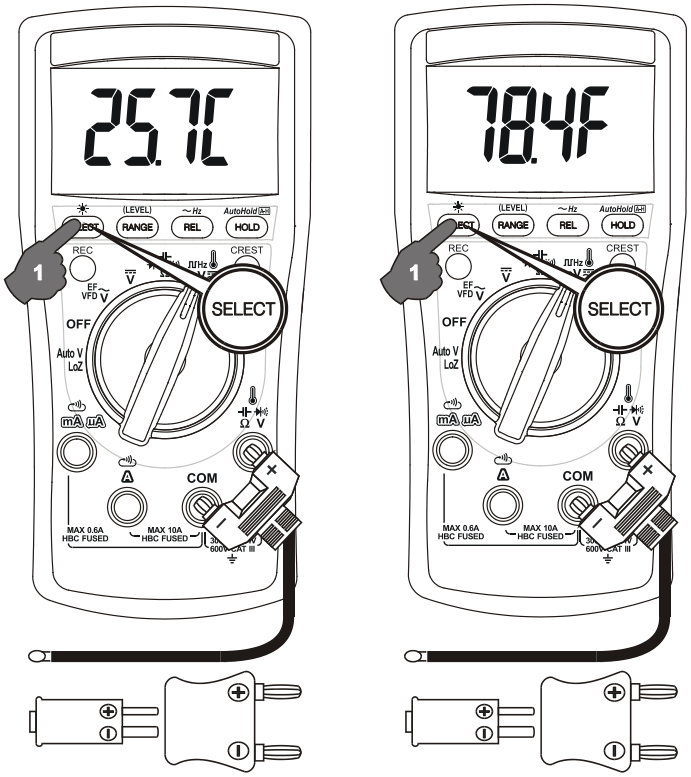

Ω Resistance; BeepLit™ Continuity; BeepLit™ Diode; Capacitance (Model 2257 only)

Inputs are made via the test lead terminals **V-COM**. Short-press the **SELECT** button to select the subject functions in sequence. The last selection will be saved as power up default for repeat measurement convenience.

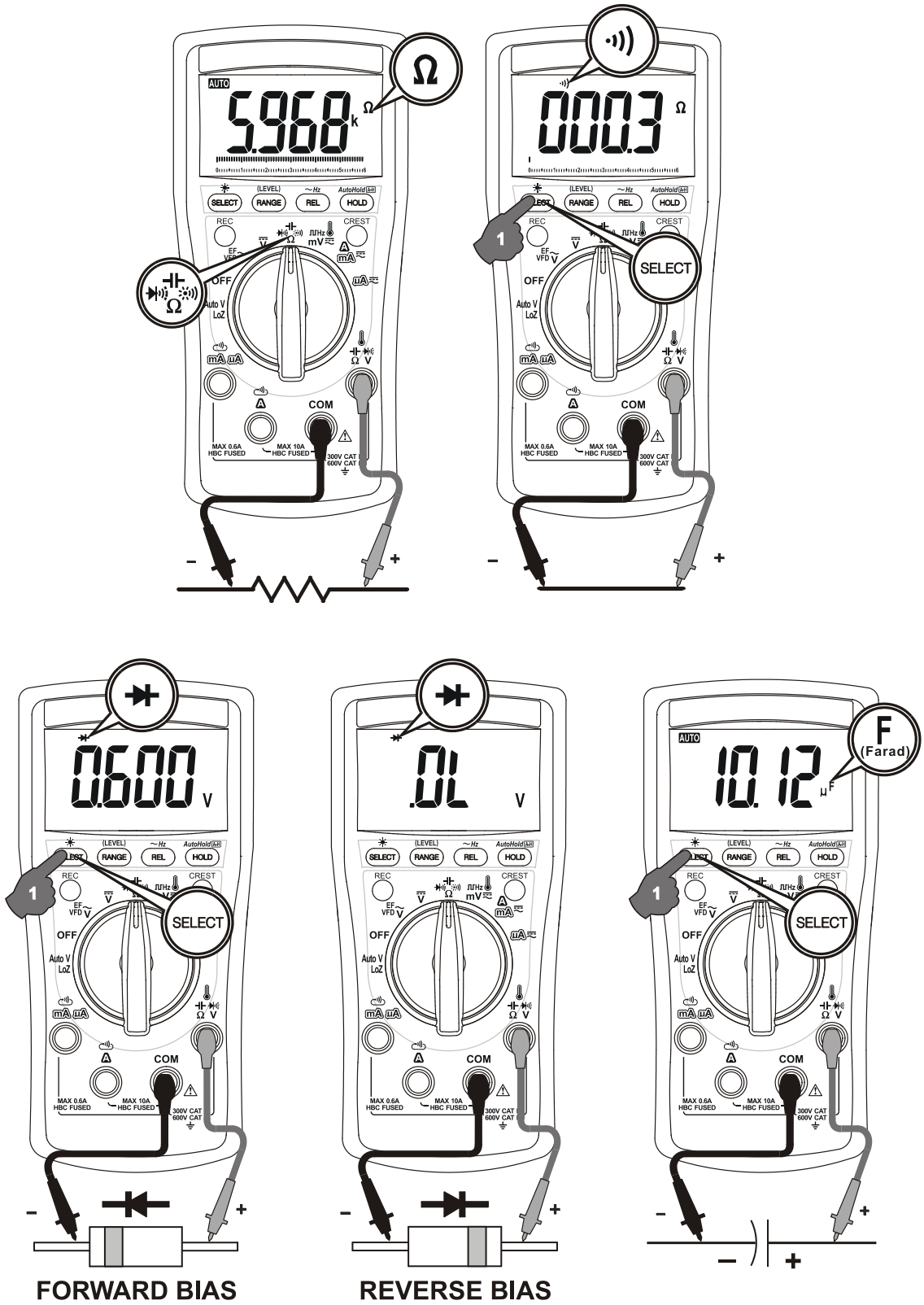

◎ BeepLit™ Continuity

This function is having an improved convenience for checking wiring connections and operation of switches. The resistance threshold is being used. A continuous beep

sound together with the display backlight flashing indicates a complete wire. Such audible and visible indications improve continuity readabilities in noisy working environments.

◎ **BeepLit™ Diode**

- **Reading indication:** Forward voltage drop (forward-biased) for a good silicon diode is between 0.400V to 0.900V. A higher reading indicates a leaky diode (defective). A zero reading indicates a shorted diode (defective). An over-range display indicates an open diode (defective). Reverse the test leads connections (reverse-biased) across the diode. The digital display shows an over-range if the diode is good. Any other readings indicate the diode is resistive or shorted (defective).
- **BeepPass™ indication (Short-beep):** When the display reading drops across 0.850V, the BeepPass™ indication gives a short beep sound to signal a Good forward voltage drop of common diodes.
- **BeepLit™ indication (Continuity):** If the reading further drops below 0.100V, the BeepLit™ indication gives a continuous beep sound together with the display backlight flashing to indicate a shorted diode or a complete wire. It is similar to that of the resistive BeepLit™ Continuity function but this BeepLit™ indication, instead, is based on the voltage threshold to indicate continuity.

NOTE:

● *Using **Resistance**, **BeepLit™ Continuity**, **BeepLit™ Diode,** or **Capacitance** function in a live circuit may produce false results. In many cases, the device-under-test should be disconnected from the circuit for an accurate measurement reading.*

● *Discharge capacitor(s) before making capacitance measurements. Large-value capacitors should be slowly discharged through an appropriate resistance load.*

A, mA, & µA

The inputs of **A** functions are made via the input terminals **A-COM**. The inputs of **mA** or **µA** functions are made via the input terminals **µA mA-COM. Short-**press the **SELECT** button to toggle between **DC** and **AC** functions. The last selection will be saved as power-up default for repeat measurement convenience that applies to all Current functions.

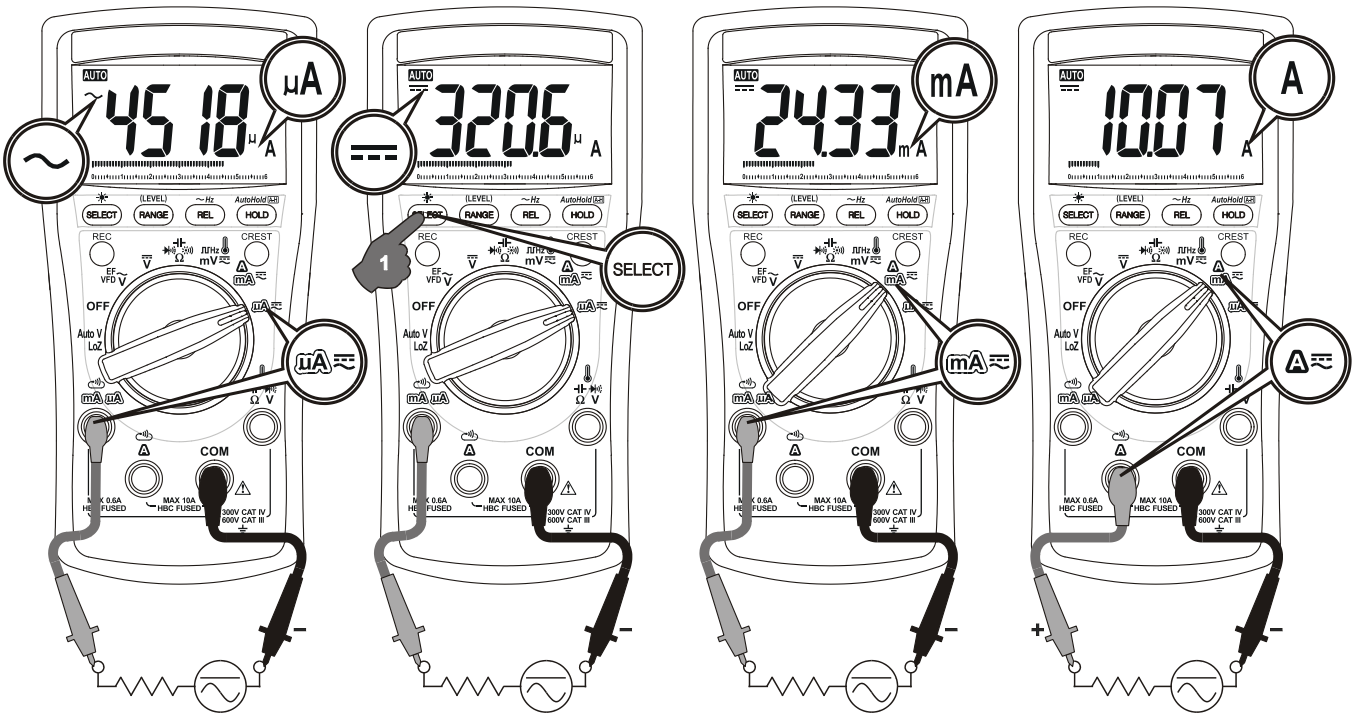

LCD Backlight

Long-press the ☀ button to toggle the LCD backlight on and off. The LCD backlight goes off automatically after idling for approximately 16 minutes to extend battery life.

Auto-ranging with Manual-ranging Override

LCD "**AUTO**" turns on in auto-ranging mode by default. Short-press the **RANGE** button to select manual-ranging override. The meter will remain in the range it was in, and the LCD "**AUTO**" turns off. Short-press the button again to select the next range in sequence. Long-press the button to resume auto-ranging.

NOTE: *Manual-ranging override is not available to the* ***Auto-V****,* ***Capacitance,*** *&* ***Hz*** *functions.*

HOLD

HOLD feature freezes the display for later viewing. LCD "**H**" turns on. Short-press the **HOLD** button to toggle the **HOLD** feature.

AutoHold Real-Read™ A-H

AutoHold feature displays the last latched stable-reading for later viewing when the test leads are removed from the test points after a significant-measurement session. Real-Read™ is to show real-time readings during the significant-measurement session to avoid "blind" measurements. Long-press the **AutoHold** A-H button to toggle the **AutoHold**

feature on. LCD "A-H" turns on. Availability: Resistance, Continuity, LoZ AutoV, VFD Volts, Voltage, and Current functions.

◎ Significant-measurements (readings) are >5% of range in the Voltage and Current functions, or non-OL in the Resistance function.
◎ Stable-reading is a significant-measurement reading having ≤ 30 counts in difference from its two immediate preceding measurement readings.
◎ Significant-measurement readings are being displayed in real time (Real-Read™); LCD "**- - - - -**" is being displayed while awaiting significant-measurements.
◎ The **AutoHold** gives a short-beep with a flashing LCD "A-H" when a stable-reading is successfully latched ready for later display. If any of the successive significant-measurement readings differs from the latched reading by >30 counts, the latched-reading will be reset awaiting a new stable-reading to re-latch.
◎ After a significant-measurement session, **AutoHold** gives a short-beep and displays the latched-reading. The reading flashes to emphasize it is on hold to avoid confusion.
◎ The **AutoHold** gives 3 short-beeps and LCD "**- - - - -**" flashes to indicate a null capture after a significant-measurement. It represents no stable-reading is latched or has been reset after encountering further unstable signal changes to avoid displaying misleading readings.

NOTE: *Make sure both test probes are making good contacts simultaneously when using the* ***AutoHold*** *feature. Single probe contact may lead to latching floating-signal readings. Removing both probes from the test points simultaneously largely avoids the mis-latching of an unwanted floating signal.*

MAX/MIN/AVG Record mode (Model 2257 only)

Short-press the **REC** R button to activate **MAX/MIN/AVG** recording mode. LCD "R **MAX AVG MIN**" turn on. The meter beeps when a new **MAX** (maximum) or **MIN** (minimum) reading is updated. The **AVG** (average) reading is calculated on all measured readings in the session. Short-press the button again to read the **MAX**, **MIN**, **AVG**, and **MAXAVGMIN** (active measurement) readings in sequence. Long-press the **REC** R button to exit this mode. Auto-Power-Off is disabled automatically in this mode.

Relative△ mode

Relative△ mode allows the user to offset the meter consecutive measurements with the displaying reading as the reference value. LCD "△" turns on. Short-press the **REL** button to toggle the **Relative △** mode.

CREST mode (Model 2257 only)

Short-press the **CREST** button to activate **CREST** mode (Instantaneous PEAK-HOLD) to capture Current or Voltage peak values in durations as short as 5ms. LCD **C** & **MAX** turn on. The meter beeps when a new **CMAX** (maximum) or **CMIN** (minimum) reading is updated. Short-press the button again to toggle the **CMAX** and **CMIN** readings. Long-press the button to exit this mode. Auto-Power-Off is disabled automatically in this mode. Availability: Voltage and Current functions.

Beep-Jack™ Input Warning

The meter beeps as well as displays "**InEr**" to warn the user against possible damage to the meter due to improper connections to the μA, mA, or A input jacks when another function, especially a voltage function, is selected.

Intelligent Auto-Power-Off (iAPO)

The Auto-Power-off (iAPO) mode turns the meter off automatically to extend battery life after approximately 20 minutes of no specified activities, where applicable:

1) Rotary switch or push button operations
2) Significant measuring readings of above 8.5% of ranges
3) Non-OL readings for Resistance, Continuity, or Diode function
4) Non-zero readings for Hz function

In other words, the meter will intelligently avoid entering the iAPO mode when it is under normal measurements. To wake up the meter from iAPO, short-press the **SELECT** or **REC** button, or turn the rotary switch OFF and then back on. Always turn the rotary switch to the OFF position when the meter is not in use.

Power-on Options

◎ Disabling iAPO

Press-and-hold the **SELECT** button while powering on the meter can disable **iAPO** feature temporarily during the power-on session. The LCD will display "**dAPO**" to confirm the selection before the **SELECT** button is released.

◎ Disabling beep tone

Press-and-hold the **RANGE** button while powering on the meter can toggle the beep tone OFF or ON in sequence. The meter confirms the selection by displaying "**dSbP**" for beeper OFF (disabled) or "**EnbP**" for beeper ON (enabled), before the **RANGE** button is released. The last selection will be saved as power-up default. When disabled, most operation beep tones are turned off except those for BeepLit™ Continuity and BeepLit™ Diode functions.

◎ Shortening iAPO idling time

Press-and-hold the **REL** button while powering on the meter can shorten the **iAPO** idling time to approximately 5 seconds temporarily during the power-on session. This mode is designed mainly for production verification use.

◎ Enabling PC-COMM computer interface capabilities

The instrument equips with an optical isolated interface port at the meter back for data communication. Press the **HOLD** button while turning the meter on to enable the PC-COMM output. LCD COMM annunciator turns on. iAPO is disabled automatically. Optional purchase PC interface kit BRUA20X is required to connect the meter to the PC computer RS232 or USB ports.

5) MAINTENANCE

NOTE: *To avoid electrical shock, disconnect the meter from any circuit, remove the test leads from the input jacks, and turn OFF the meter before opening the case. Do not operate with an open case.*

Trouble Shooting

If the instrument fails to operate, check batteries and test leads etc., and replace as necessary. Double-check the operating procedure as described in this user's manual. Refer to the LIMITED WARRANTY section for obtaining calibration, repairing, or warranty service.

Accuracy and Calibration

Accuracy is specified for a period of one year after calibration. Periodic calibration at intervals of one year is recommended to maintain meter accuracy.

Cleaning and Storage

Periodically wipe the meter and the test probe assembly with a damp cloth and mild detergent. Do not use abrasives or solvents. Allow to dry completely before operating. If the meter is not to be used for periods of longer than 60 days, remove the batteries and store them separately.

Battery and Fuse replacement:

Loosen the screw from the access cover of the case bottom. Lift the access cover. Replace the batteries or fuse(s). Put back the access cover and re-fasten the screw.

Battery use: 1.5V AAA size battery x 2

Fuse use:

F1 Fuse (Dimension: 6x32 mm) for **µA/mA** input:
ASTM HV620.0.63: 0.63A/1000Vac & Vdc, IR 30kA, F fuse

F2 Fuse (Dimension: 10x38 mm) for **A** input:
Bussmann KLM-12: 12A/600V, IR 50kA for Vdc & 100kA for Vac, F fuse
or
ASTM HV110.11A: 11A/1000V, IR 30kA, F fuse

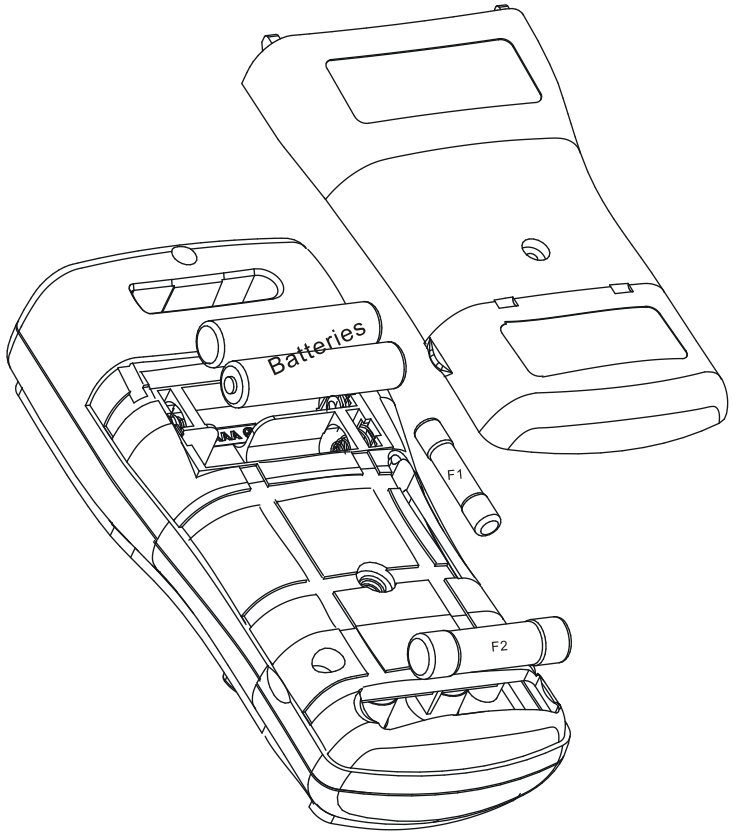

GENERAL SPECIFICATION

Display: 3-5/6 digits 6,000 counts

Update Rate:

3-5/6 digits: Max 5 per second nominal

60 Segment Bar-graph: 40 per second max

Operating Temperature: -10°C to 50°C continuous operating (except on **A** function, see Electrical Specifications below for more details)

Relative Humidity: Maximum relative humidity 80% for temperature up to 31°C decreasing linearly to 50% relative humidity at 50°C

Altitude: Operating below 2000m

Storage Temperature: -20°C ~ 60°C, < 80% R.H. (with battery removed)

Temperature Coefficient: Nominal 0.15 x (specified accuracy)/ °C @ (-10°C ~ 18°C or

28°C ~ 50°C), or otherwise specified
Sensing: True RMS sensing
Ingress Protection: IP40
Pollution Degree: 2
Safety: Certified per IEC/UL/EN/BSEN 61010-1 Ed. 3.1, IEC/UL/EN/BSEN 61010-2-033 Ed. 2.0, IEC/UL/EN/BSEN 61010-031 Ed. 2.0 and the corresponding CAN/CSA-C22.2 regulations to Measurement Categories:
CAT III 600V and CAT IV 300V AC & DC
Transient Protection: 6.0kV (1.2/50μs surge)
E.M.C. : Meets EN61326-1
In an RF field of 3V/m:
Temperature function is not specified
Ohm function:
Total Accuracy = Specified Accuracy + 15 digits
Other functions:
Total Accuracy = Specified Accuracy
Performance above 3V/m is not specified
Overload Protection:
μA & mA: 0.63A/1000V DC/AC rms, IR 30kA, F fuse; or better
A: 12A/600V, IR 50kA for Vdc & 100kA for Vac, F fuse; or 11A/1000V DC/AC rms, IR 30kA, F fuse; or better
V & AutoV: 1100V AC rms & 660V DC
mV, Ohm & others: 600V DC/AC rms
Low Battery: Below approx. 2.5V
Power Supply: 1.5V AAA size battery X 2
Power Consumption (typical): 5mA
iAPO Consumption (typical): 20μA
iAPO Timing: Idle for 30 minutes
Dimension: 161*80*50mm L*W*H (With Holster)
Weight: Approx. 334 gm (With Holster)
Special Features: AutoHold; AutoV (LoZ); VFD-ACV & VFD-Hz; Hi/Lo EF-Detection (NCV & Single pole); BeepLit™ Diode w/BeepPass™ indication; BeepLit™ Continuity; Auto-ranging REC MAX/MIN/AVG; Auto-ranging CREST (Instantaneous Peak) MAX/MIN; Backlighted LCD; Auto-ranging Relative-zero; Display Hold; BeepJack™ audible & visible input warning
Accessories: Test lead pair; Batteries; User's manual; BKP60 banana plug type-K thermocouple
Optional Purchase Accessories: BKB32 banana plug to type-K socket plug adaptor; BMH-01 magnetic hanger; USB interface kit BRUA-20X

Electrical Specification

Accuracy is given as ±(% of reading digits + number of digits) or otherwise specified @ 23°C ± 5°C

ACV & ACA accuracies are specified from 1 % to 100 % of range or otherwise specified; Maximum Crest Factor <2:1 at full scale & <4:1 at half scale, and with frequency spectrum limited to the specified bandwidth of the AC functions for non-sinusoidal waveforms

ACV

RANGE	Accuracy
50Hz ~ 60Hz	
6.000V , 60.00V, 600.0V	0.7% + 3d
45Hz ~ 500Hz	
6.000V , 60.00V, 600.0V	1.0% + 5d

Input Impedance: 10MΩ, 54pF nominal

Overload protection: 1100Vrms for AC; 660V for DC

ACmV

RANGE	Accuracy
40Hz ~ 500Hz	
60.00mV [1)], 600.0mV [2)]	1.0% + 3d
500Hz ~ 1kHz	
60.00mV [1)], 600.0mV [2)]	2.0% + 3d

Input Impedance: 10MΩ, 54pF nominal

[1)]Signal peak absolute values, including DC bias, less than 130mV_{peak}

[2)]Signal peak absolute values, including DC bias, less than 1300mV_{peak}

VFD_ACV (with Low Pass Filter)

RANGE	Accuracy [1)]
10Hz ~ 100Hz	
600.0V	1.0% + 3d
100Hz ~ 400Hz	
600.0V	10% + 3d [2)]

Overload protection: 1100Vrms for AC; 660V for DC

[1)]Not specified for fundamental frequency > 400Hz

[2)]Accuracy linearly decreases from 1% + 3d @100Hz to 10% + 3d @400Hz

AutoV_ACV (Model 2257 only)

RANGE	Accuracy [1)]
50Hz ~ 60Hz	
6.000V, 60.00V, 600.0V	1.0% + 5d

Overload protection: 1100Vrms for AC; 660V for DC

[1)]Not specified at <1.5VAC

Threshold: ≥ 1.5VAC nominal

Input Impedance:

Initially approx. 2.1kΩ, 164pF nominal; Impedance increases abruptly within a fraction of a second as display voltage is above 50V (typical). Ended-up impedances vs display voltages typically are:

12kΩ@100V

100kΩ @300V

240kΩ @600V

DCV

RANGE	Accuracy
6.000V	0.3% + 4d
60.00V	0.4% + 3d
600.0V	0.2% + 3d

Overload protection: 1100Vrms for AC; 660V for DC

Input Impedance: 10MΩ, 54pF nominal

DCmV

RANGE	Accuracy
60.00mV, 600.0mV	0.3% + 4d

Input Impedance: 10MΩ, 54pF nominal

AutoV_DCV (Models 2257 only)

RANGE	Accuracy [1)]
6.000V, 60.00V, 600.0V	1.0% + 4d

Overload protection: 1100Vrms for AC; 660V for DC

[1)]Not specified at <1.5VDC

Threshold: ≥ +1.5VDC or ≤ -1.5VDC nominal

Input Impedance:

Initially approx. 2.1kΩ, 164pF nominal; Impedance increases abruptly within a fraction of a second as display voltage is above 50V (typical). Ended-up impedances vs display

voltages typically are:
12kΩ@100V
100kΩ @300V
240kΩ @600V

CREST mode (Instantaneous Peak Hold)
Resolution: 6000 counts
Add ± 250 digits to specified accuracy for changes in duration
> 1ms for VFD-ACV function;
> 350µs for other Voltage and Current functions

AutoHold Real-Read™
Accuracy: Specified accuracy ± 50 digits
Availability: Resistance, Continuity, LoZ AutoV, VFD Volts, Voltage and Current functions

Ohm

RANGE [1]	Accuracy
600.0Ω, 6.000kΩ, 60.00kΩ, 600.0kΩ	0.5% + 4d
6.000MΩ [2]	0.7% + 4d
60.00MΩ [3]	2.0% + 4d [4]

[1] Open Circuit Voltage: 1.6VDC typical
[2] Constant Test Current: 0.2µA Typical
[3] Constant Test Current: 0.02µA Typical
[4] 5%+20d @ >30MΩ

BeepLit™ Continuity Tester
Continuity Threshold: Between 30Ω and 480Ω
Continuity ON Response Time: <15ms
Audible Indication: Beep sound
Visible Indication: LCD Backlight

Capacitance (Models 2257 only)

RANGE	Accuracy
20.00nF, 200.0nF	1.5% + 8d
2000nF, 20.00µF, 200.0µF, 2000µF	1.5% + 2d
10.00mF	4.5% + 10d

Accuracies with film capacitor or better

BeepLit™ Diode Tester

RANGE	Accuracy	Test Current (Typical)	Open Circuit Voltage
3.000V	1.0% + 3d	0.3mA	< 3.2 VDC

BeepPass™ Indication (Short-beep): Drop Across 0.850V
BeepLit™ Indication (Continuity) Threshold: < 0.100V
Audible Indication: Beep Sound
Visible Indication: LCD Backlight

DC Current

RANGE	Accuracy	Burden Voltage
600.0μA, 6000μA	0.5% + 5d	0.1mV/μA
60.00mA, 600.0mA		1.9mV/mA
6.000A, 10.00A [1)]	1.0%+5d	0.04V/A

[1)]10A continuous up to ambient 40°C only, and is <3 mins on per >15 mins off @ 40°C ~ 55°C; >10A to 20A for <30 seconds on per >15 mins off

AC Current

RANGE	Accuracy	Burden Voltage
50Hz ~ 400Hz		
600.0μA, 6000μA	1.0% + 5d	0.1mV/μA
60.00mA, 600.0mA		1.9mV/mA
6.000A, 10.00A [1)]		0.04V/A

[1)]10A continuous up to ambient 40°C only, and is <3 mins on per >15 mins off @ 40°C ~ 55°C; >10A to 20A for <30 seconds on per >15 mins off

Temperature (Models 2257 only)

RANGE	Accuracy [1) 2)]
-40.0 °C ~ 99.9°C	1.0% + 1 °C
100 °C ~ 1000°C	0.3%+3 °C
-40.0 °F ~ 99.9 °F	1.0% + 2 °F
100 °F ~ 1832 °F	0.3%+6 °F

[1)]Accuracies assume the meter interior and the ambient have reached the same temperature (isothermal stage) for a correct junction voltage compensation. Allow enough settling time for a significant change in ambient temperature. It can take up to an hour for changes > 5°C.
[2)]Type-K thermocouple range & accuracy not included

Logic Level Hz (DCmV Function)

Range	Sensitivity (Square wave)
10.00 Hz ~ 200.0 kHz	3Vpeak

Accuracy: 0.03% + 4d

Line Frequency

Available Function	Trigger Level	Sensitivity (Sine RMS)	Range
ACV/DCV	0	1V	10Hz - 50kHz
	1	4V	
	2	40V	10Hz - 1kHz
	3	400V	
VFD-ACV	2	40V	10Hz - 1kHz
	3	400V	
μA	0	40μA	10Hz - 5kHz
	1	400μA	
mA	0	4mA	
	1	40mA	
A	0	0.6A	50Hz - 1kHz
	1	6A	

Accuracy: 0.03% + 4d

Non-Contact EF-Detection

Bar-segment Indication	EF-H (Hi Sensitivity)	EF-L (Lo Sensitivity)
	Typical Voltage (Tolerance)	
-	10V (3V ~ 19V)	40V (16V ~ 71V)
- -	20V (10V ~ 38V)	80V (32V ~ 142V)
- - -	40V (21V ~ 79V)	160V (63V ~ 285V)
- - - -	80V (40V ~ 156V)	300V (105V ~ 608V)
- - - - -	160V (>80V)	500V (>300V)

Indication: Display bar-segments, backlight flashing, & beep tones in proportion to the field strength

Detection Frequency: 50/60Hz

Detection Antenna: Top-right end of the meter

Probe-Contact EF-Detection: For more precise indications of live wires, such as distinguishing between live and ground connections, use direct contact testing with one single test-probe via the input terminal COM or V. The COM terminal (Black) has the best sensitivity.

LIMITED WARRANTY

BRYMEN warrants to the original product purchaser that each product it manufactures will be free from defects in material and workmanship under normal use and service within a period of one year from the date of purchase. BRYMEN's warranty does not apply to accessories, fuses, fusible resistors, spark gaps, varistors, batteries or any product which, in BRYMEN's opinion, has been misused, altered, neglected, or damaged by accident or abnormal conditions of operation or handling.

To obtain warranty service, contact your local BRYMEN authorized agent or send the product, with proof of purchase and description of the difficulty, postage and insurance prepaid, to BRYMEN TECHNOLOGY CORPORATION. BRYMEN assumes no risk for damage in transit. BRYMEN will, at its option, repair or replace the defective product free of charge. However, if BRYMEN determines that the failure was caused by misused, altered, neglected, or damaged by accident or abnormal conditions of operation or handling, you will be billed for the repair.

THIS WARRANTY IS EXCLUSIVE AND IS IN LIEU OF ALL OTHER WARRANTIES, EXPRESSED OR IMPLIED, INCLUDING BUT NOT LIMITED TO ANY IMPLIED WARRANTY OR MERCHANTABILITY OR FITNESS FOR A PARTICULAR PURPOSE OR USE. BRYMEN WILL NOT BE LIABLE FOR ANY SPECIAL, INDIRECT, INCIDENTAL OR CONSEQUENTIAL DAMAGES.

BRYMEN®
BRIGHT PEOPLE'S CHOICE

BRYMEN TECHNOLOGY CORPORATION
TEL:+886 2 2226 3396
FAX:+886 2 2225 0025
http://www.brymen.com

22
PAP

PRINTED ON RECYCLABLE PAPER, PLEASE RECYCLE
COPYRIGHT © MMXXIII Btc, ALL RIGHTS RESERVED
P/N: 7M1C-1611-0000 PRINTED IN TAIWAN