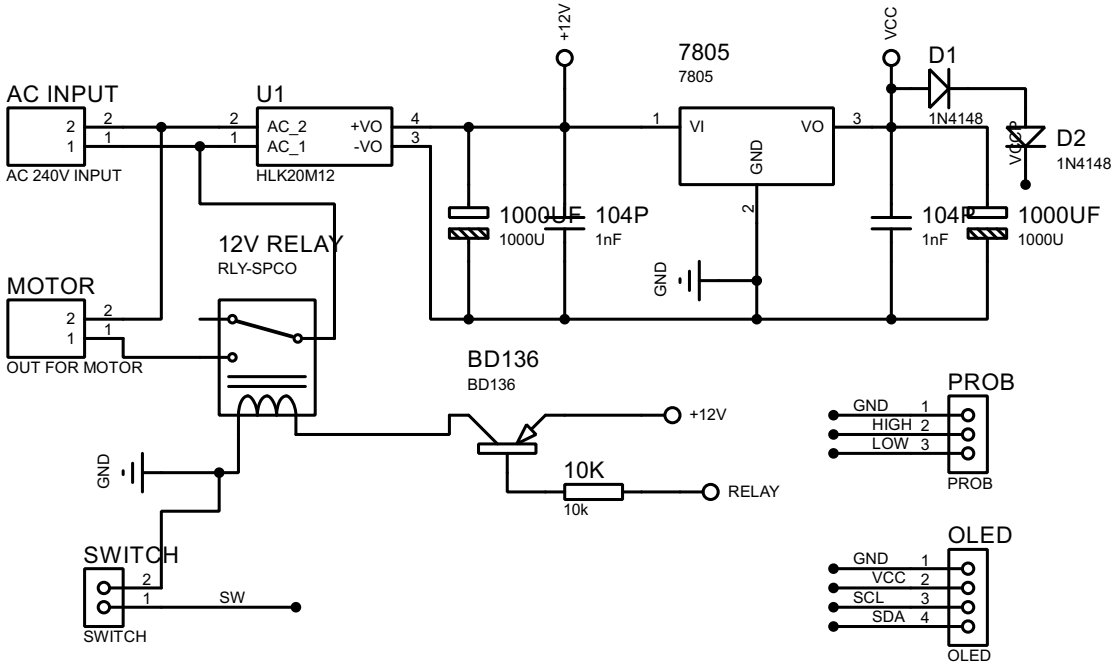

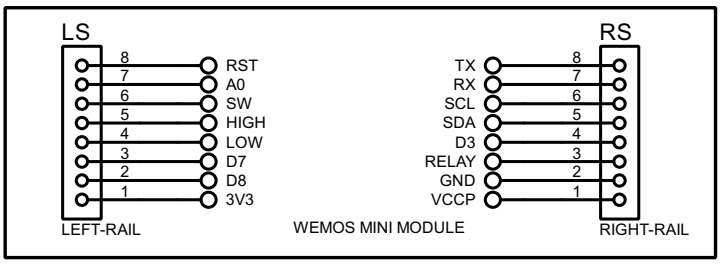

FILE NAME: SMARRT PUMP.pdsprj	DATE: 8/5/2022
DESIGN TITLE: SMARRT PUMP.pdsprj	PAGE: 1 of 1
PATH: C:\Users\Towsif\Documents\SMARRT PUMP.pdsprj	
BY: @AUTHOR REV:@REV	TIME: 3:32:00 AM