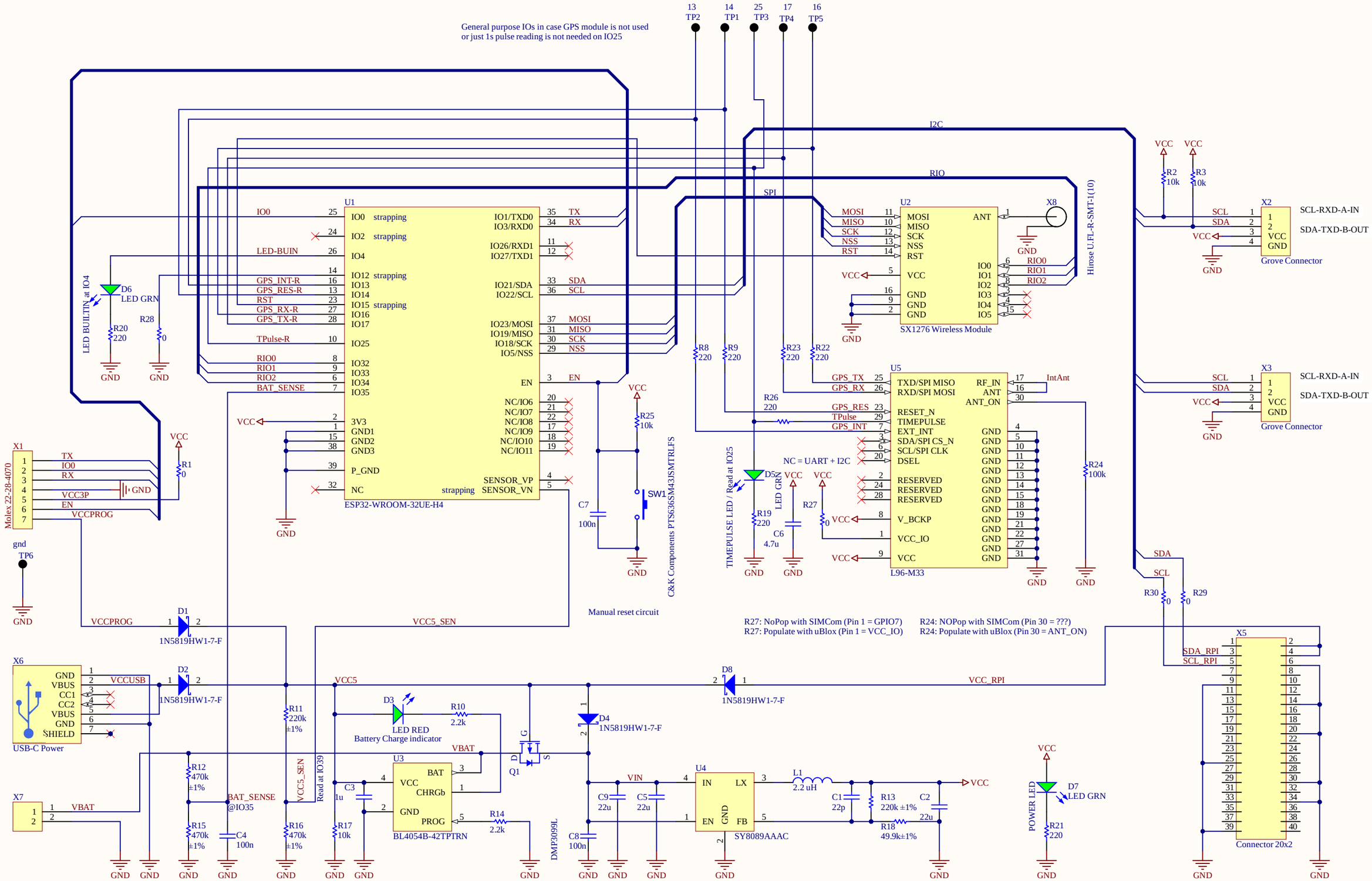

Title	HobbyIoT LoRaWAN Helium network sensor development board		
Size A3	Number H2S-Dev		Revision V1.2
Date: 8/31/2024		Sheet of	
File: H2S-Dev V1.2.SchDoc		Drawn By: sivanovbg	