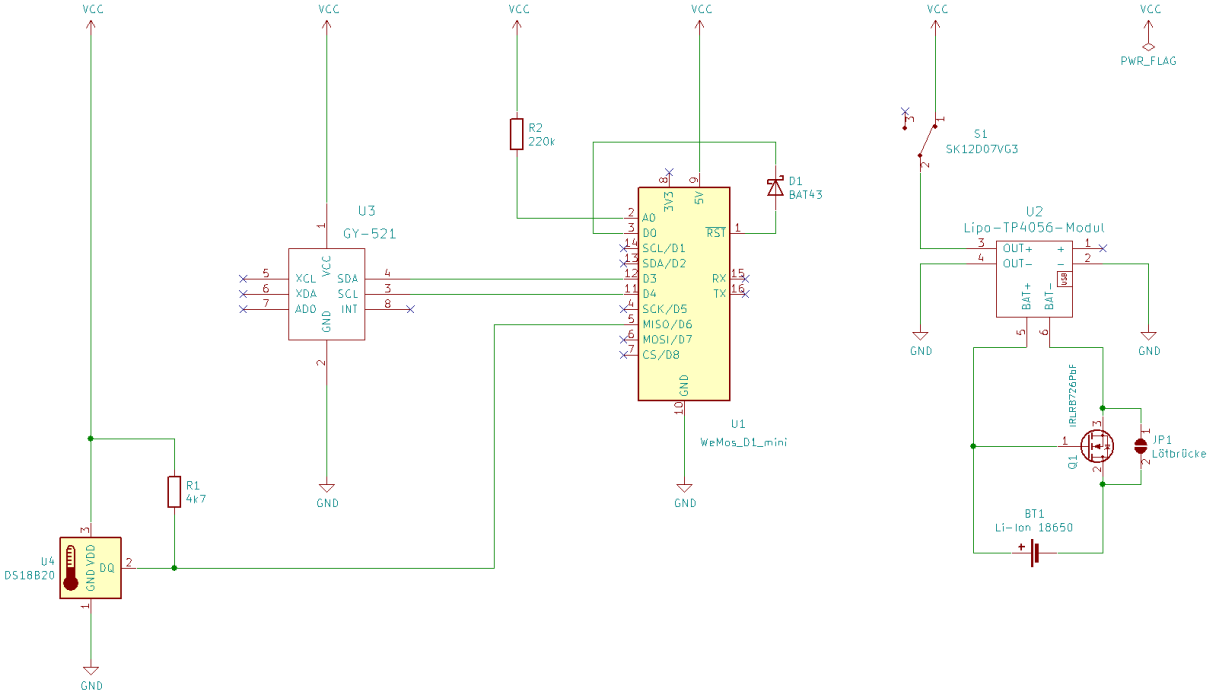

With reverse polarity protection
Mit Verpolungsschutz

Sheet: /
File: iSpindel_hobipivo_2.0.sch

Title: iSpindel_hobipivo

Size: A4	Date: 2021-02-07	**Rev: 2.0**
KiCad E.D.A. kicad (5.1.9)-1		Id: 1/1