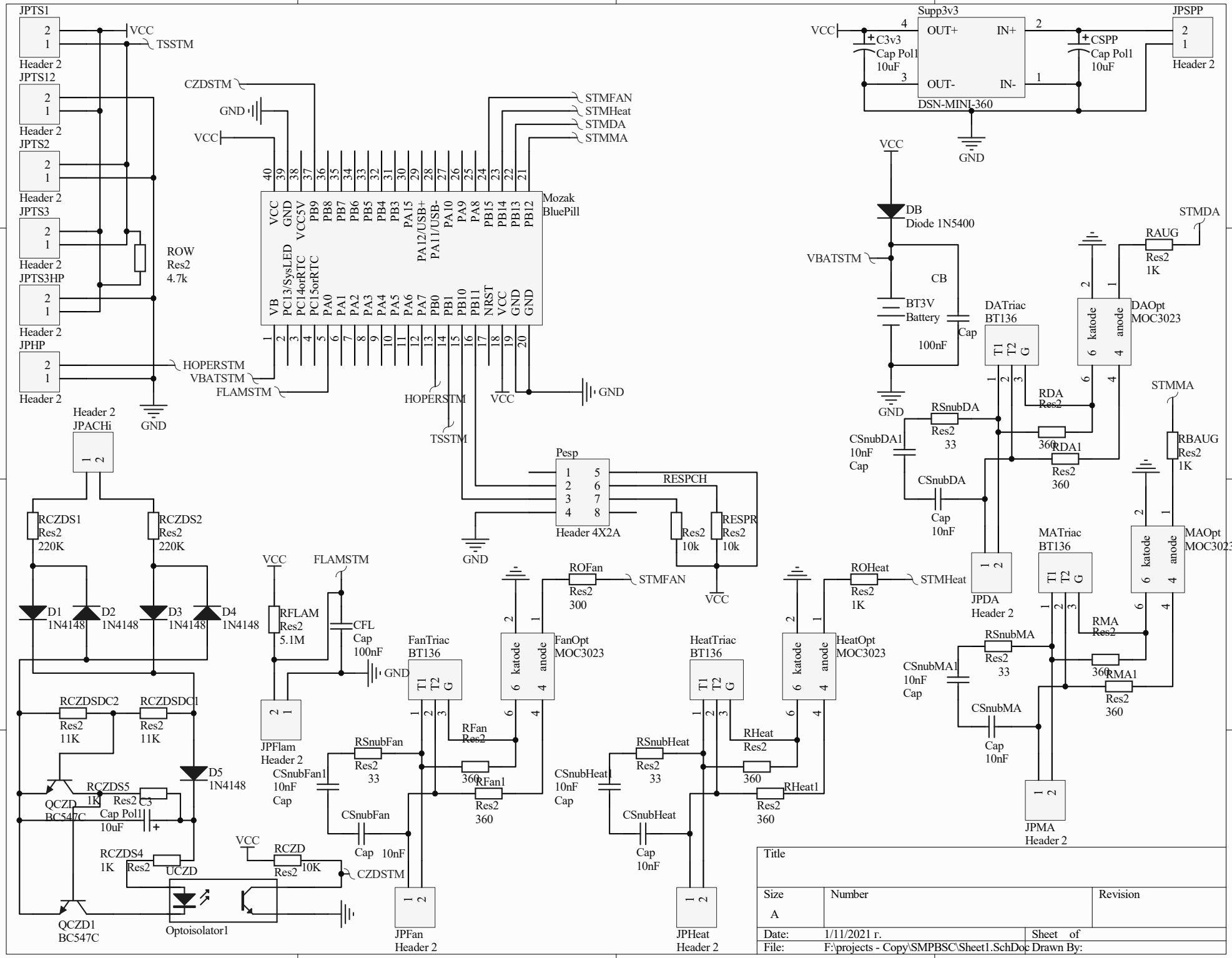
JPTS1
Header 2
JPTS12
Header 2
JPTS2
Header 2
JPTS3
Header 2
JPTS3HP
Header 2
JPHP
Header 2
VCC
TSSTM
ROW
Res2
4.7k
GND
CZDSTM
GND
VCC
STMFAN
STMHeat
STMDA
STMMA
Mozak
BluePill
VB
PC13/SysLED
PC14orRTC
PC15orRTC
PA0
PA1
PA2
PA3
PA4
PA5
PA6
PA7
PB0
PB1
PB10
PB11
NRST
VCC
GND
GND
VCC
GND
PB9
PB8
PB7
PB6
PB5
PB4
PB3
PA15
PA12/USB+
PA11/USB-
PA10
PA9
PA8
PB15
PB14
PB13
PB12
HOPERSTM
VBATSTM
FLAMSTM
HOPERSTM
TSSTM
VCC
GND
Supp3v3
OUT+
IN+
OUT-
IN-
DSN-MINI-360
C3v3
Cap Pol1
10uF
CSPP
Cap Pol1
10uF
JPSPP
Header 2
VCC
GND
DB
Diode 1N5400
VBATSTM
CB
BT3V
Battery
Cap
100nF
GND
STMDA
RAUG
Res2
1K
DATriac
BT136
T1
T2
G
DAOpt
MOC3023
katode
anode
RDA
Res2
RSnubDA
Res2
33
360
RDA1
Res2
360
CSnubDA1
10nF
Cap
CSnubDA
Cap
10nF
STMMA
RBAUG
Res2
1K
MATriac
BT136
MAOpt
MOC3023
JPDA
Header 2
RMA
Res2
RSnubMA
Res2
33
360
RMA1
Res2
360
CSnubMA1
10nF
Cap
CSnubMA
Cap
10nF
JPMA
Header 2
Header 2
JPACHi
RCZDS1
Res2
220K
RCZDS2
Res2
220K
D1
1N4148
D2
1N4148
D3
1N4148
D4
1N4148
RCZDSDC2
Res2
11K
RCZDSDC1
Res2
11K
D5
1N4148
RCZDS5
1K
Res2
C3
Cap Pol1
10uF
QCZD
BC547C
RCZDS4
1K
Res2
UCZD
QCZD1
BC547C
Optoisolator1
VCC
RCZD
Res2
10K
CZDSTM
VCC
FLAMSTM
RFLAM
Res2
5.1M
CFL
Cap
100nF
GND
JPFlam
Header 2
Pesp
Header 4X2A
RESPCH
Res2
10k
RESPR
Res2
10k
GND
VCC
ROFan
Res2
300
STMFAN
FanTriac
BT136
FanOpt
MOC3023
RFan
Res2
360
RFan1
Res2
360
RSnubFan
Res2
33
CSnubFan1
10nF
Cap
CSnubFan
Cap
10nF
JPFan
Header 2
ROHeat
Res2
1K
STMHeat
HeatTriac
BT136
HeatOpt
MOC3023
RHeat
Res2
360
RHeat1
Res2
360
RSnubHeat
Res2
33
CSnubHeat1
10nF
Cap
CSnubHeat
Cap
10nF
JPHeat
Header 2
Title
Size
A
Number
Revision
Date:
1/11/2021 r.
Sheet of
File:
F:\projects - Copy\SMPBSC\Sheet1.SchDoc
Drawn By: