On Stabilizing Communication Law for Bilateral Force-reflecting Teleoperation Systems

Ho Duc Tho and Takanori Miyoshi

***Abstract*— This brief proposes a new stabilizing communication law to allow the wave transformation-based teleoperation architecture to accommodate direct environmental contact force feedback, potentially increasing the human operator's experience of telepresence. Simulation results are provided.**

I. Introduction

Passivity is an important technique to circumvent the time-delay problem for teleoperation systems with force feedback. This approach was initiated in [1] using scattering theory and latter interpreted in the framework of wave transformation (WT) [2]. Several extensions have been proposed to deal with drawbacks in the early works of [1], [2] by correcting position drift (see [3], [4]), avoiding wave reflection (see [3], [5]), and mitigating time-varying delays (see [6], [7]). Nevertheless, most of the existing WT-based teleoperation schemes need to use a feedback of the coordinating force instead of the real environmental contact force to keep the passivity of the remote subsystem. This is detrimental to the teleoperation transparency. The reason is that, often, the coordinating force is insensitive to the change of environmental contact force leading to inaccurate force information feeding back to the human operator. The inaccuracy is higher for robots with higher internal friction forces and/or higher gear ratios. In fact, it was shown in [8]–[11] that transmitting the environmental contact force rather than the coordinating force improves the sense of telepresence. However, the direct contact force feedback causes contact instability even when the lossless WT is used [1]. It will be later shown in this paper that, in such a scenario, the remote subsystem is non-passive causing non-passivity to the overall closed-loop system, and hence the instability. To sum up, the direct contact force feedback can increase the sense of telepresence for the WT-based stabilization schemes but stability of the overall system is at risk. Therefore, it is important to resolve this dilemma. Although some existing methods based on the small-gain theorem and wave filters can overcome this dilemma (see [12], [13]), they tend to be heuristic and their extensions to nonlinear teleoperations are not plausible. There are currently no WT-based approaches available to address the aforementioned difficulty.

This paper introduces a new strategy for enabling direct contact force feedback for the WT-based stabilization approach while maintaining system stability in the face of an arbitrarily large constant time delay. We will design a new WT scheme having excessive level of passivity to compensate for the non-passivity of remote side. This is the fundamental idea of the paper. The traditional lossless WT, at its best, does not influence the overall system stability. Our proposed communication law based on the newly developed WT can indeed stabilize non-passive (remote) systems. The stability of the closed-loop system under the new WT formulation will be demonstrated using Lyapunov method.

[1]Ho Duc Tho and Takanori Miyoshi are with Department of System Safety, Nagaoka University of Technology, 1603-1 Kamitomiokamachi, Niigata, Japan. E-mails: hoductho@vos.nagaokaut.ac.jp, miyoshi@vos.nagaokaut.ac.jp

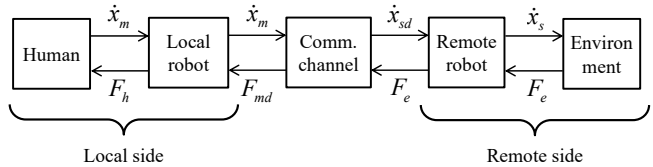

Fig. 1. A velocity–force teleoperation architecture.

II. Problem formulation

In this section, we will show that the instability occurs when the contact force (instead of the coordinating force) is directly fed back in the WT-based teleoperation architecture of [1]. We demonstrate this using a simulation example and explain the reason. The teleoperation system considered throughout the paper is shown in Fig. 1. The system is identical to that of [1] but the contact force is transmitted back to the local side rather than the coordinating force. The dynamics of local robot is given by

$$M_m\ddot{x}_m = \tau_m + F_h, \tag{1}$$

where $M_m > 0$, x_m, and τ_m denote the mass, the position, and the applied motor force of the local robot, respectively. The human force applying to the local robot is represented by F_h, and it is modeled by

$$F_h = -K_h x_m + f_h^\star. \tag{2}$$

In (2), $K_h > 0$ is the spring coefficient of the human hand. The exogenous force $f_h^\star$ generated by human muscles can be decomposed into two components as follows

$$f_h^\star = K_h x_{md} + F_h^\star,$$

where $x_{md} \in \mathbb{R}$ and $F_h^\star$ stand for the constant and the time-varying part of $f_h^\star$, respectively. It is also assumed that $F_h^\star$ is bounded and has a finite energy, that is to say

$$F_h^\star \in \mathcal{L}_\infty \text{ and } \int_0^\infty {F_h^\star}^2 dt < \infty. \tag{3}$$

The remote robot's dynamics is specified by

$$M_s\ddot{x}_s = \tau_s - F_e, \tag{4}$$

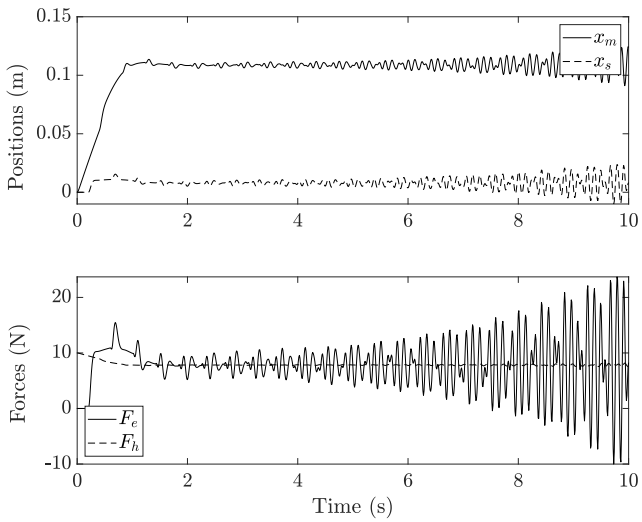

Fig. 2. Unstable WT-based teleoperation system when the contact force is directly transmitted back rather than the coordinating force.

where $M_s > 0$, x_s, and τ_s are the mass, the position, and the applied motor force of the remote robot, respectively. It is supposed that the remote robot is in contact with a spring environment, having a coefficient of $K_e \geq 0$, i.e., the contact force F_e is modeled by

$$F_e = K_e x_s. \tag{5}$$

According to [1], the remote and local robots are controlled by the following laws

$$\tau_s = -B_{s1}\dot{x}_s + F_s, \quad B_{s1} > 0 \tag{6}$$

$$\tau_m = -B_m\dot{x}_m - F_{md}, \quad B_m > 0. \tag{7}$$

The coordinating force F_s in (6) is given by the below proportional–derivative (PD) controller

$$F_s = K_s \int_0^t (\dot{x}_{sd} - \dot{x}_s) d\tau + B_{s2}\left(\dot{x}_{sd} - \dot{x}_s\right), \tag{8}$$

with $K_s > 0$ and $B_{s2} > 0$. When a lossless WT is used for the communication channel, the reflecting force F_{md} in (7) and the velocity command $\dot{x}_{sd}$ in (8) are determined by the following communication law

$$\begin{aligned} \dot{x}_{sd}(t) &= \dot{x}_m(t-T) + 4b^2\left[F_{md}(t-T) - F_e(t)\right] \\ F_{md}(t) &= F_e(t-T) + \frac{1}{4b^2}\left[\dot{x}_m(t) - \dot{x}_{sd}(t-T)\right], \end{aligned} \tag{9}$$

where $1/4b^2 > 0$ is the characteristic impedance and $T > 0$ is the magnitude of constant delay.

The closed-loop system governed by (1)–(9) is then simulated using the following conditions

$$\begin{aligned} &M_m = M_s = 1 \text{ kg},\ K_h = 20 \text{ N/m},\ K_e = 1000 \text{ N/m}, \\ &T = 0.2 \text{ s},\ B_m = B_{s1} = 0.5,\ b = 0.06,\ B_{s2} = 1/4b^2, \\ &K_s = 100,\ x_{md}(t) \equiv 0.5 \text{ m},\ F_h^\star(t) \equiv 0 \text{ N}. \end{aligned}$$

Note that the condition $B_{s2} = 1/4b^2$ is chosen to attain the impedance matching. Moreover, by using all of the above system parameters and control gains, the teleoperation system (i.e., the one in Fig. 1 with a replacement of F_e by F_s) is stable if the coordinating force is fed back. However, when we use the contact force F_e for feedback (see Fig. 1), the simulation result shown in Fig. 2 clearly demonstrates that positions and forces of both local and remote robots are blowing up. The reason for this unstable behavior is explained as follows. Substituting (5) and (6) into (4) and assuming that $x_{sd}(0) = x_s(0)$ results in

$$M\ddot{x}_s + C\dot{x}_s + Kx_s = K_s x_{sd} + B_{s2}\dot{x}_{sd}, \tag{10}$$

where $M = M_s$, $C = B_{s1} + B_{s2}$, and $K = K_s + K_e$. The expression (10) describes the dynamics of remote side (including the controlled remote robot and the environment) whose input is $\dot{x}_{sd}(t)$ and output is $F_e(t)$ (see also Fig. 1). Let s be the complex variable, and denote $\dot{X}_{sd}(s)$ and $F_e(s)$ as Laplace transforms of $\dot{x}_{sd}(t)$ and $F_e(t)$, respectively. From (10), the transfer function of the remote side is

$$G_r(s) = \frac{F_e(s)}{\dot{X}_{sd}(s)} = \frac{K_e\left(K_s + B_{s2}s\right)}{s\left(Ms^2 + Cs + K\right)}.$$

It can be seen that $G_r(s)$ has a relative degree of two, so $G_r(s)$ is non-passive [14, p. 238]. Providing that both local side (including the controlled local robot and the human operator) and the WT-based communication law (9) are lossless passive, the non-passivity of $G_r(s)$ results in the passivity shortage for the overall closed-loop system. In the energy point of view, when directly transmitting the contact force F_e back to the local side, the remote side might indefinitely inject energy into the whole system despite the fact that the environment is passive itself. This explains the aforementioned instability behavior. Note that, when the coordinating force F_s is fed back instead, the remote side is passive, leading to an overall stable system. Nevertheless, as mentioned before, sending the coordinating force F_s decreases the level of telepresence.

In fact, the transfer function $G_r(s)$ describing the remote side has a shortage of passivity in input (see [15], [16]). To determine the level of this shortage, frequency domain techniques can be used [17]. However, these methods do not provide useful information about the system states which is crucial for the subsequent stability analysis. Therefore, the Lyapunov technique is employed to measure the level of passivity shortage in input of $G_r(s)$. Choosing the following quadratic Lyapunov function

$$V_r = \boldsymbol{x}^\top \boldsymbol{P}\boldsymbol{x}, \tag{11}$$

where $\boldsymbol{x} = \left[\dot{x}_s\ x_s\ x_{sd}\right]^\top$ and $\boldsymbol{P} > 0$ is to-be-determined. Let $\boldsymbol{z} = \left[\dot{x}_s\ x_s\ \dot{x}_{sd}\ x_{sd}\right]^\top$. Differentiating V_r once yields

$$\dot{V}_r = \boldsymbol{z}^\top\left(\boldsymbol{A}_2^\top\boldsymbol{P}\boldsymbol{A}_1 + \boldsymbol{A}_1^\top\boldsymbol{P}\boldsymbol{A}_2\right)\boldsymbol{z}. \tag{12}$$

The matrices $\boldsymbol{A}_1$ and $\boldsymbol{A}_2$ in (12) are given by

$$\boldsymbol{A}_1 = \begin{bmatrix} 1 & 0 & 0 & 0 \\ 0 & 1 & 0 & 0 \\ 0 & 0 & 0 & 1 \end{bmatrix},\ \boldsymbol{A}_2 = \begin{bmatrix} \frac{-C}{M} & \frac{-K}{M} & \frac{B_{s2}}{M} & \frac{K_s}{M} \\ 1 & 0 & 0 & 0 \\ 0 & 0 & 1 & 0 \end{bmatrix}.$$

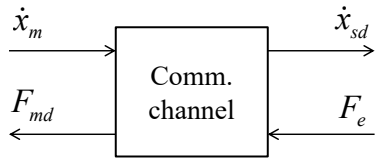

Fig. 3. The communication channel as a two-port system.

Adding and subtracting the term $K_e x_s \dot{x}_{sd} + \alpha \dot{x}_{sd}^2 - \lambda \dot{x}_s^2$ ($\lambda > 0$ can be chosen arbitrarily small and $\alpha > 0$ is a to-be-optimized constant) to the right-hand-side of (12) yields

$$\begin{aligned}\dot{V}_r =& \boldsymbol{z}^\top \left(\boldsymbol{A}_2^\top \boldsymbol{P} \boldsymbol{A}_1 + \boldsymbol{A}_1^\top \boldsymbol{P} \boldsymbol{A}_2 + \boldsymbol{A}_3\right) \boldsymbol{z} \\ &+ \left(F_e \dot{x}_{sd} + \alpha \dot{x}_{sd}^2 - \lambda \dot{x}_s^2\right),\end{aligned}$$

where $\boldsymbol{A}_3$ is specified by

$$\boldsymbol{A}_3 = \begin{bmatrix} \lambda & 0 & 0 & 0 \\ \star & 0 & -K_e/2 & 0 \\ \star & \star & -\alpha & 0 \\ \star & \star & \star & 0 \end{bmatrix}.$$

The constant α is the level of passivity shortage in input of the remote side, and it is determined by the following semi-definite optimization program, which can be efficiently solved by many open-source solvers.

$$\begin{aligned} \min_{\alpha, \boldsymbol{P}} \quad & \alpha \\ \text{s.t.} \quad & \boldsymbol{P} > 0 \\ & \boldsymbol{A}_2^\top \boldsymbol{P} \boldsymbol{A}_1 + \boldsymbol{A}_1^\top \boldsymbol{P} \boldsymbol{A}_2 + \boldsymbol{A}_3 \leq 0. \end{aligned} \tag{13}$$

The feasibility of (13) implies that

$$\dot{V}_r \leq F_e \dot{x}_{sd} + \alpha \dot{x}_{sd}^2 - \lambda \dot{x}_s^2. \tag{14}$$

To recover the stability for the overall system, we need to compensate for the non-passivity of the remote side. Referring to Fig. 1, in order to accomplish such a compensation, the block right next to the remote side (i.e., the communication channel) should have an excessive level of passivity that is greater than α at its output port $\dot{x}_{sd}$. Clearly, the conventional lossless WT is not able to do so. Therefore, in the subsequent section, we will design a new WT scheme called upper strictly passive WT that can neutralize the passivity shortage of the remote side.

III. Upper strictly passive wave transformation design and analysis

The communication channel seen as a two-port element is shown in Fig. 3. Our goal is to design a WT-based communication channel that can provide a prescribed excessive level of passivity at the output port $\dot{x}_{sd}$ to compensate for the non-passivity of the remote side. Denote the input and output vectors of the communication channel as $\boldsymbol{u} = [\dot{x}_m \; -F_e]^\top$ and $\boldsymbol{y} = [F_{md} \; \dot{x}_{sd}]^\top$, respectively. Since the passivity excess is required for the upper port $\dot{x}_{sd}$, the following definition of the upper strictly passive (USP) property for two-port systems is proposed.

Definition 1 (USP)**.** A general two-port system shown in Fig. 3 is USP at a given level of $\gamma_l < 0$ and $\gamma_r < 0$ for the input–output pair $\boldsymbol{u}$–$\boldsymbol{y}$ if and only if there exists a continuously differentiable non-negative scalar function $S(t)$ such that for all $\boldsymbol{u}(t)$, $\boldsymbol{y}(t)$, and $t \geq 0$

$$\dot{S}(t) \leq \boldsymbol{u}^\top(t)\boldsymbol{y}(t) + \gamma_l \dot{x}_m^2(t) + \gamma_r \dot{x}_{sd}^2(t). \tag{15}$$

When $\gamma_r = 0$ is allowed, a two-port system satisfying (15) is said to be left USP (LUSP). In the same manner, if $\gamma_l = 0$ is permitted, a two-port system fulfilling (15) is said to be right USP (RUSP).

Note that a definition for lower strictly passive property is not necessary because the two-port system can be flipped to suit the application at hand.

In contrast to a generic two-port system, the communication channel must meet another crucial property, namely the steady-state (SS) transmission requirement.

Definition 2 (SS transmission requirement)**.** Consider a two-port system shown in Fig. 3. Assume that all input/output signals of the system including $\dot{x}_m$, $\dot{x}_{sd}$, F_{md}, and F_e are in their steady states, i.e., the following limits

$$\begin{aligned} &\lim_{t\to\infty} \dot{x}_m(t) := \dot{x}_m(\infty), \;\; \lim_{t\to\infty} \dot{x}_{sd}(t) := \dot{x}_{sd}(\infty) \\ &\lim_{t\to\infty} F_{md}(t) := F_{md}(\infty), \;\; \lim_{t\to\infty} F_e(t) := F_e(\infty) \end{aligned}$$

exist and are finite. Then, the two-port system is said to satisfy the SS transmission requirement if and only if

$$\dot{x}_{sd}(\infty) = \dot{x}_m(\infty) \text{ and } F_{md}(\infty) = F_e(\infty).$$

We need to endow the communication channel with not only the USP property to render the overall system stability but also the SS transmission requirement to ensure the correctness of data transmission at least in the steady state. Unfortunately, the USP property and the SS transmission requirement are two conflicting criteria, i.e., we cannot achieve both at the same time. This claim can be verified using a counterexample: when $\dot{x}_m(t) \equiv \dot{x}_{sd}(t) \equiv 1$ and $F_{md}(t) \equiv F_s(t) \equiv 1$, the SS transmission requirement is certified, but by integrating (15) the USP property dictates the following

$$\begin{aligned} &S(0) + \int_0^t \boldsymbol{u}^\top \boldsymbol{y} d\tau \geq -\gamma_l \int_0^t \dot{x}_m^2 d\tau - \gamma_r \int_0^t \dot{x}_{sd}^2 d\tau, \;\; \forall t \geq 0 \\ &\implies S(0) \geq -\left(\gamma_l + \gamma_r\right) t, \;\; \forall t \geq 0. \end{aligned}$$

Clearly, the above condition is false when $\gamma_l + \gamma_r < 0$ as required by the USP (or LUSP/RUSP) specification shown in Definition 1. From the energy perspective, the USP property necessitates that the communication channel must dissipate the energy at its upper ports $\dot{x}_m$ and $\dot{x}_{sd}$ for all time, whereas the SS transmission requirement reads that the energy dissipation across the communication channel should stop in the steady state, and hence the contradiction. This conflict is similar to the one between the perfect transparency and the stability of any time-delayed teleoperation systems as pointed out in [18], namely that, the stability can only be

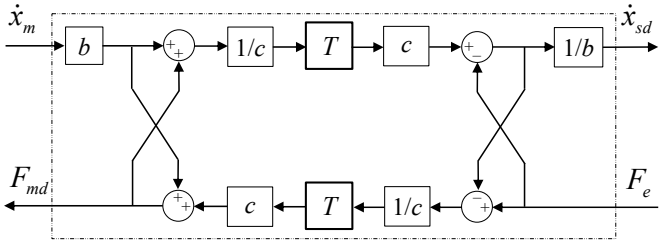

Fig. 4. A graphical interpretation of the lossless passive communication law (9) with $c = \sqrt{2b}$.

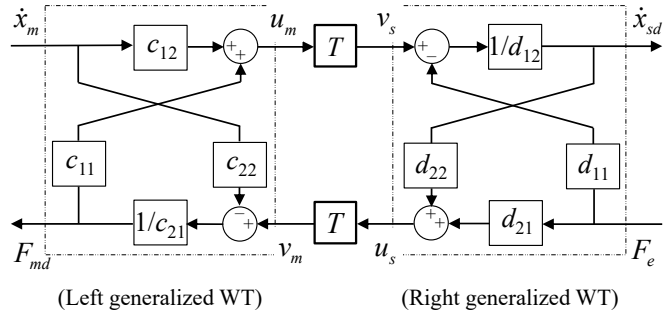

Fig. 5. The communication channel is governed by a generalized WT.

achieved at a price of sacrificing a certain level of control performance.

By acknowledging that we cannot accomplish both USP property and SS transmission requirement for the communication channel, and that stability is an uncompromising requirement for all control systems, we seek to relax the SS transmission requirement. Fortunately, there is an appropriate way for doing so. Recalling that, for the classical WT-based teleoperation system of [1], it has been proven in [19] that along the stability, the result $\dot{x}_m(\infty) = \dot{x}_{sd}(\infty) = 0$ must hold. As a consequence, there is only one steady state condition for a stable teleoperation system, that is to say, $\dot{x}_m(\infty) = \dot{x}_{sd}(\infty) = 0$. Therefore, we can relax the (full) SS transmission requirement given in Definition 2 as follows.

Definition 3 (Relaxed SS transmission requirement)**.** Consider a two-port system shown in Fig. 3. Assume that all input/output signals of the system including $\dot{x}_m$, $\dot{x}_{sd}$, F_{md}, and F_e are in their steady states, *and the condition* $\dot{x}_m(\infty) = 0$ *holds*. Then, the two-port system is said to satisfy the relaxed SS (RSS) transmission requirement if and only if

$$\dot{x}_{sd}(\infty) = \dot{x}_m(\infty)\,(=0) \text{ and } F_{md}(\infty) = F_e(\infty).$$

We now proceed to design a communication law fulfilling both USP property and RSS transmission requirement. The motivation comes from a graphical interpretation of the lossless WT-based communication law (9) introduced in [2] (see Fig. 4). Since such a communication law is only lossless passive (not USP), modifications are needed. Therefore, a generalized WT shown in Fig. 5 is proposed, where the unknown coefficients c_{ij} and d_{ij} $(i, j = 1, 2)$ are to-be-determined. The following relations can be inferred from the left generalized WT of Fig. 5

$$\begin{aligned} u_m(t) &= c_{11}F_{md}(t) + c_{12}\dot{x}_m(t) \\ v_m(t) &= c_{21}F_{md}(t) + c_{22}\dot{x}_m(t). \end{aligned} \tag{16}$$

Similarly, from the right generalized WT, we have

$$\begin{aligned} u_s(t) &= d_{21}F_e(t) + d_{22}\dot{x}_{sd}(t) \\ v_s(t) &= d_{11}F_e(t) + d_{12}\dot{x}_{sd}(t). \end{aligned} \tag{17}$$

The left generalized WT is related to the right generalized WT by constant time delays resulting from data transmission between the local and remote sides, namely that

$$\begin{aligned} v_s(t) &= u_m(t-T) \\ v_m(t) &= u_s(t-T). \end{aligned} \tag{18}$$

We firstly derive constraints for free variables c_{ij} and d_{ij} $(i, j = 1, 2)$ to realize the RSS transmission requirement. Afterward, additional constraints will be determined to achieve the USP property.

Theorem 1. A necessary and sufficient condition for the generalized WT governed by (16)–(17) to achieve the RSS transmission requirement defined in Definition 3 is

$$c_{11} = d_{11},\ c_{21} = d_{21},\ c_{11}d_{22} - c_{21}d_{12} \neq 0.$$

The proof of Theorem 1 is straightforward and therefore is omitted. We next determine constraints for c_{ij} and d_{ij} $(i, j = 1, 2)$ to bring about the USP requirement.

Theorem 2. The generalized WT given by (16)–(17) achieves the USP property defined in Definition 1 if

$$\begin{aligned} &c_{11}^2 - c_{21}^2 = 0,\ c_{12}^2 - c_{22}^2 = \gamma_l,\ c_{11}c_{12} - c_{21}c_{22} = 0.5 \\ &d_{21}^2 - d_{11}^2 = 0,\ d_{22}^2 - d_{12}^2 = \gamma_r,\ d_{21}d_{22} - d_{11}d_{12} = -0.5, \end{aligned}$$

where $\gamma_l < 0$ and $\gamma_r < 0$ are desired levels of passivity excess of the communication channel.

Proof. The following Lyapunov–Krasovskii storage function is proposed

$$V_c = \int_{t-T}^{t} \left[u_m^2(\tau) + u_s^2(\tau)\right] d\tau$$

Taking the first derivative of V_c results in

$$\dot{V}_c = u_m^2(t) + u_s^2(t) - u_m^2(t-T) - u_s^2(t-T). \tag{19}$$

Using the relation (18) on (19) leads to

$$\dot{V}_c = u_m^2(t) + u_s^2(t) - v_m^2(t) - v_s^2(t). \tag{20}$$

Substituting (16)–(17) into (20) results in

$$\begin{aligned} \dot{V}_c = &\left[c_{11}F_{md}(t) + c_{12}\dot{x}_m(t)\right]^2 - \left[d_{11}F_e(t) + d_{12}\dot{x}_{sd}(t)\right]^2 \\ &+ \left[d_{21}F_e(t) + d_{22}\dot{x}_{sd}(t)\right]^2 - \left[c_{21}F_{md}(t) + c_{22}\dot{x}_m(t)\right]^2. \end{aligned}$$

Rearranging the equation above gives

$$\begin{aligned}\dot{V}_c =& \left(c_{11}^2 - c_{21}^2\right) F_{md}^2(t) + \left(c_{12}^2 - c_{22}^2\right) \dot{x}_m^2(t) \\ &+ \left(d_{21}^2 - d_{11}^2\right) F_e^2(t) + \left(d_{22}^2 - d_{12}^2\right) \dot{x}_{sd}^2(t) \\ &+ 2\left(c_{11}c_{12} - c_{21}c_{22}\right) F_{md}(t)\dot{x}_m(t) \\ &+ 2\left(d_{21}d_{22} - d_{11}d_{12}\right) F_e(t)\dot{x}_{sd}(t). \end{aligned} \tag{21}$$

Based on (21), it can be easily concluded that, to realize the USP property defined in Definition 1, the constraints given in Theorem 2 should hold. This completes the proof. □

By aggregating all constraints given in Theorems 1–2, we can solve for the unknown variables c_{ij} and d_{ij} $(i, j = 1, 2)$ to make the generalized WT meet both USP property and RSS transmission requirement. The calculation result is as follows ($b > 0$ is a free variable)

$$\begin{aligned} &c_{11} = b,\ c_{12} = b\gamma_l + \frac{1}{4b},\ c_{21} = b,\ c_{22} = b\gamma_l - \frac{1}{4b} \\ &d_{11} = b,\ d_{12} = -b\gamma_r + \frac{1}{4b},\ d_{21} = b,\ d_{22} = -b\gamma_r - \frac{1}{4b}. \end{aligned} \tag{22}$$

The generalized WT (16)–(17) whose coefficients satisfying (22) is called USP wave transformation. The USP communication law is therefore given by

$$\begin{aligned} \dot{x}_{sd}(t) &= \frac{4b^2\gamma_l + 1}{-4b^2\gamma_r + 1}\dot{x}_m(t-T) + \Delta_1 \\ F_{md}(t) &= F_e(t-T) + \Delta_2 \\ \Delta_1 &= \frac{4b^2}{-4b^2\gamma_r + 1}\left[F_{md}(t-T) - F_e(t)\right] \\ \Delta_2 &= \frac{1}{b}\left[-\left(b\gamma_l - \frac{1}{4b}\right)\dot{x}_m(t) - \left(b\gamma_r + \frac{1}{4b}\right)\dot{x}_{sd}(t-T)\right] \end{aligned} \tag{23}$$

The following Theorem outlines the stability of the USP communication law (23). The proof is omitted here due to lack of space.

Theorem 3. The USP communication law (23) is bounded input–bounded output stable, namely that, when the inputs $\dot{x}_m$ and F_e belong to $\mathcal{L}_\infty$, then the outputs $\dot{x}_{sd}$ and F_{md} also belong to $\mathcal{L}_\infty$.

IV. Stability analysis

In this section, stability of the closed-loop system in Fig. 1 governed by the local robot's dynamics (1) controlled by (7), the remote robot's dynamics (4) controlled by (6), and the USP communication law (23), will be analyzed. The following Lyapunov–Krasovskii functional is proposed

$$\begin{aligned} V =& \frac{1}{2}M_m\dot{x}_m^2 + \frac{1}{2}K_h\left(x_{md} - x_m\right)^2 + V_r + V_c \\ \Longrightarrow V =& \frac{1}{2}M_m\dot{x}_m^2 + \frac{1}{2}K_h\left(x_{md} - x_m\right)^2 + \boldsymbol{x}^\top \boldsymbol{P}\boldsymbol{x} \\ &+ \int_{t-T}^{t}\left[u_m^2(\tau) + u_s^2(\tau)\right]d\tau. \end{aligned}$$

Using (1), (14) and (21), the first derivative of V is given by

$$\begin{aligned} \dot{V} =& -B_m\dot{x}_m^2 - F_{md}\dot{x}_m + F_h^\star\dot{x}_m + K_h\dot{x}_m\left(x_{md} - x_m\right) \\ &- K_h\dot{x}_m\left(x_{md} - x_m\right) + F_e\dot{x}_{sd} + \alpha\dot{x}_{sd}^2 - \lambda\dot{x}_s^2 \\ &+ F_{md}\dot{x}_m - F_e\dot{x}_{sd} + \gamma_l\dot{x}_m^2 + \gamma_r\dot{x}_{sd}^2. \end{aligned}$$

Simplifying the above expression results in

$$\dot{V} = \left(\gamma_l - B_m\right)\dot{x}_m^2 + \left(\gamma_r + \alpha\right)\dot{x}_{sd}^2 - \lambda\dot{x}_s^2 + F_h^\star\dot{x}_m. \tag{24}$$

It is straightforward to verify the following inequality

$$\begin{aligned} &-\left(B_m - \gamma_l\right)\dot{x}_m^2 + F_h^\star\dot{x}_m \\ &\quad\le -\frac{\left(B_m - \gamma_l\right)}{2}\dot{x}_m^2 + \frac{1}{2\left(B_m - \gamma_l\right)}F_h^{\star 2}. \end{aligned} \tag{25}$$

Substituting (25) into (24) yields

$$\begin{aligned} \dot{V} \le& -\frac{\left(B_m - \gamma_l\right)}{2}\dot{x}_m^2 + \left(\gamma_r + \alpha\right)\dot{x}_{sd}^2 - \lambda\dot{x}_s^2 \\ &+ \frac{1}{2\left(B_m - \gamma_l\right)}F_h^{\star 2} + K_h\dot{x}_{md}\left(x_{md} - x_m\right). \end{aligned} \tag{26}$$

As mentioned previously, we choose $\gamma_r < -\alpha$ to compensate for the non-passivity of remote side. Integrating (26) gives

$$\begin{aligned} \int_0^t \dot{V}d\tau \le& -\frac{\left(B_m - \gamma_l\right)}{2}\int_0^t \dot{x}_m^2 d\tau + \left(\gamma_r + \alpha\right)\int_0^t \dot{x}_{sd}^2 d\tau \\ &- \lambda\int_0^t \dot{x}_s^2 d\tau + \frac{1}{2\left(B_m - \gamma_l\right)}\int_0^t F_h^{\star 2} d\tau \end{aligned} \tag{27}$$

Since $V(t) \ge 0$, $\forall t \ge 0$, from (27), we have

$$\begin{aligned} &\frac{\left(B_m - \gamma_l\right)}{2}\int_0^t \dot{x}_m^2 d\tau - \left(\gamma_r + \alpha\right)\int_0^t \dot{x}_{sd}^2 d\tau + \lambda\int_0^t \dot{x}_s^2 d\tau \\ &\le \frac{1}{2\left(B_m - \gamma_l\right)}\int_0^t F_h^{\star 2} d\tau + V(0). \end{aligned} \tag{28}$$

Note that $\int_0^\infty F_h^{\star 2} d\tau < \infty$ (i.e., $F_h^\star \in \mathcal{L}_2$) by an assumption made in section II and $V(0) \in \mathcal{L}_\infty$ due to assumed bounded initial conditions. Thus, by taking the limit as $t \to \infty$ for both sides of (28), the following integrals exist and are finite

$$\int_0^\infty \dot{x}_m^2 d\tau,\ \int_0^\infty \dot{x}_{sd}^2 d\tau,\ \int_0^\infty \dot{x}_s^2 d\tau.$$

As a consequence, $\dot{x}_m \in \mathcal{L}_2$, $\dot{x}_{sd} \in \mathcal{L}_2$, and $\dot{x}_s \in \mathcal{L}_2$. Moreover, using these results on (27) leads to the fact that $V(t) \in \mathcal{L}_\infty$, therefore

$$x_{md} - x_m,\ x_s,\ x_{sd},\ \dot{x}_m,\ \text{and}\ \dot{x}_s \in \mathcal{L}_\infty.$$

Since $F_h = K_h(x_{md} - x_m) + F_h^\star$ and $F_e = K_e x_s$ where x_{md} and $F_h^\star$ are also assumed to be bounded (see section II), the functions F_h, F_e, and x_m also belong to $\mathcal{L}_\infty$. Using Theorem 3, the results $\dot{x}_m \in \mathcal{L}_\infty$ and $F_e \in \mathcal{L}_\infty$ imply that $\dot{x}_{sd} \in \mathcal{L}_\infty$ and $F_{md} \in \mathcal{L}_\infty$. It is therefore concluded that the control laws $\tau_m \in \mathcal{L}_\infty$ and $\tau_s \in \mathcal{L}_\infty$ (see (6) and (7)). Employing all of these information, accelerations of both local and remote robots must be bounded, i.e., $\ddot{x}_m \in \mathcal{L}_\infty$ and $\ddot{x}_s \in \mathcal{L}_\infty$ (see (1) and (4)). Since $\dot{x}_i \in \mathcal{L}_2$ and $\ddot{x}_i \in \mathcal{L}_\infty$ $(i = m, s)$, it can be inferred that $\dot{x}_i(t) \to 0$ as $t \to \infty$ [20].

We therefore proved that the newly established USP communication law can stabilize the non-passive remote side which makes it possible to employ the direct contact force feedback for the WT-based teleoperation architecture.

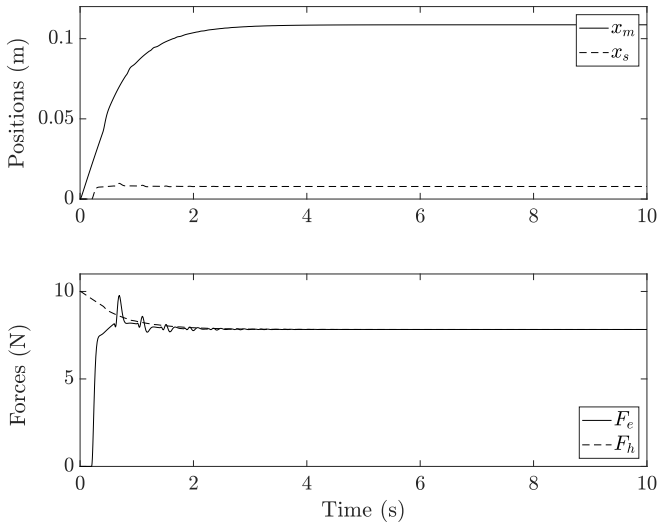

Fig. 6. Simulation result of the WT-based teleoperation system with the USP communication law and direct contact force feedback.

V. Simulation result

In order to validate the effectiveness of the WT-based teleoperation system with the USP communication law and direct contact force feedback, a similar simulation as described in section II is repeated here. For the sake of clarification, the simulation condition is rewritten as follows

$$M_m = M_s = 1 \text{ kg},\ K_h = 20 \text{ N/m},\ K_e = 1000 \text{ N/m},$$
$$T = 0.2 \text{ s},\ B_m = B_{s1} = 0.5,\ b = 0.06,\ B_{s2} = 1/4b^2,$$
$$K_s = 100,\ x_{md}(t) \equiv 0.5 \text{ m},\ F_h^\star(t) \equiv 0 \text{ N}.$$

By employing the above system parameters and setting $\lambda = 0.01$, the semi-definite optimization program (13) is solved by the MOSEK solver. This solver can be accessed by MATLAB using the YALMIP parser. The optimization result gives $\alpha = 9.07$. Therefore, it is chosen that $\gamma_r = -20$ to realize the requirement $\gamma_r < -\alpha$ and $\gamma_l = -10$ is also selected after tuning. The simulation result is shown in Fig. 6. It can be seen that, unlike the unstable teleoperation system as found in section II when a lossless passive communication law is used, the USP communication law succesfully stabilizes the WT-based teleoperation system employing direct contact force feedback. The applied human force F_h and the contact force F_e converge to one another, meaning that the human operator can feel an accurate contact force in the hard-contact scenario. This verifies the validity of design and analysis procedures performed in this paper.

VI. Conclusion and future work

In this paper, a new wave transformation technique is proposed to stabilize a non-passive remote system resulting from the use of direct contact force for feedback rather than the coordinating force to enhance the sense of telepresence. The communication law based on the new wave transformation scheme is able to compensate for the passivity shortage of the remote side while maintaining the relaxed steady state transmission requirement. The stability of a wave transformation-based teleoperation architecture using the suggested stabilizing communication law is proven. Our future work will focus on further applications of the proposed wave transformation technique in position–force bilateral teleoperation systems and multilateral telecontrols.

References

[1] R. Anderson and M. Spong, "Bilateral control of teleoperators with time delay," *IEEE Trans. on Automatic Control*, vol. 34, no. 5, pp. 494–501, 1989.

[2] G. Niemeyer and J.-J. Slotine, "Stable adaptive teleoperation," *IEEE J. of Oceanic Engineering*, vol. 16, no. 1, pp. 152–162, 1991.

[3] ——, "Telemanipulation with time delays," *The Int. J. of Robotics Research*, vol. 23, no. 9, pp. 873–890, 2004.

[4] N. Chopra, M. Spong, R. Ortega, and N. Barabanov, "On tracking performance in bilateral teleoperation," *IEEE Trans. on Robotics*, vol. 22, no. 4, pp. 861–866, 2006.

[5] N. A. Tanner and G. Niemeyer, "Improving perception in time-delayed telerobotics," *The Int. J. of Robotics Research*, vol. 24, no. 8, pp. 631–644, 2005.

[6] R. Lozano, N. Chopra, and M. Spong, "Passivation of force reflecting bilateral teleoperators with time varying delay," in *Proc. of the 8th Mechatronics Forum*, 2002, pp. 24–26.

[7] E. Nuno, L. Basanez, and R. Ortega, "Passivity-based control for bilateral teleoperation: A tutorial," *Automatica*, vol. 47, no. 3, pp. 485–495, 2011.

[8] K. Hashtrudi-Zaad and S. E. Salcudean, "Analysis of control architectures for teleoperation systems with impedance/admittance master and slave manipulators," *The Int. J. of Robotics Research*, vol. 20, no. 6, pp. 419–445, 2001.

[9] I. Aliaga, A. Rubio, and E. Sanchez, "Experimental quantitative comparison of different control architectures for master-slave teleoperation," *IEEE Trans. on Control Systems Technology*, vol. 12, no. 1, pp. 2–11, 2004.

[10] E. J. Rodriguez-Seda, D. Lee, and M. W. Spong, "Experimental comparison study of control architectures for bilateral teleoperators," *IEEE Trans. on Robotics*, vol. 25, no. 6, pp. 1304–1318, 2009.

[11] M. Franken, S. Stramigioli, S. Misra, C. Secchi, and A. Macchelli, "Bilateral telemanipulation with time delays: A two-layer approach combining passivity and transparency," *IEEE Trans. on Robotics*, vol. 27, no. 4, pp. 741–756, 2011.

[12] T. Miyoshi, K. Terasima, and M. Buss, "A design method of wave filter for stabilizing non-passive operating system," in *IEEE Int. Conf. on Control Applications*, 2006, pp. 1318–1324.

[13] S. F. Atashzar, I. G. Polushin, and R. V. Patel, "A small-gain approach for nonpassive bilateral telerobotic rehabilitation: Stability analysis and controller synthesis," *IEEE Trans. on Robotics*, vol. 33, no. 1, pp. 49–66, 2017.

[14] H. Khalil, *Nonlinear Systems*, 3rd ed. Upper Saddle River, NJ: Pearson, 2002.

[15] F. Zhu, M. Xia, and P. J. Antsaklis, "Passivity analysis and passivation of feedback systems using passivity indices," in *2014 American Control Conf.*, 2014, pp. 1833–1838.

[16] M. Xia, A. Rahnama, S. Wang, and P. J. Antsaklis, "Control design using passivation for stability and performance," *IEEE Trans. on Automatic Control*, vol. 63, no. 9, pp. 2987–2993, 2018.

[17] M. Xia, P. J. Antsaklis, and V. Gupta, "Passivity indices and passivation of systems with application to systems with input/output delay," in *53rd IEEE Conf. on Decision and Control*, 2014, pp. 783–788.

[18] D. Lawrence, "Stability and transparency in bilateral teleoperation," *IEEE Trans. on Robotics and Automation*, vol. 9, no. 5, pp. 624–637, 1993.

[19] R. J. Anderson and M. Spong, "Asymptotic stability for force reflecting teleoperators with time delay," *The Int. J. of Robotics Research*, vol. 11, no. 2, pp. 135–149, 1992.

[20] B. Farkas and S.-A. Wegner, "Variations on barbalat's lemma," *The American Mathematical Monthly*, vol. 123, no. 8, pp. 825–830, 2016.