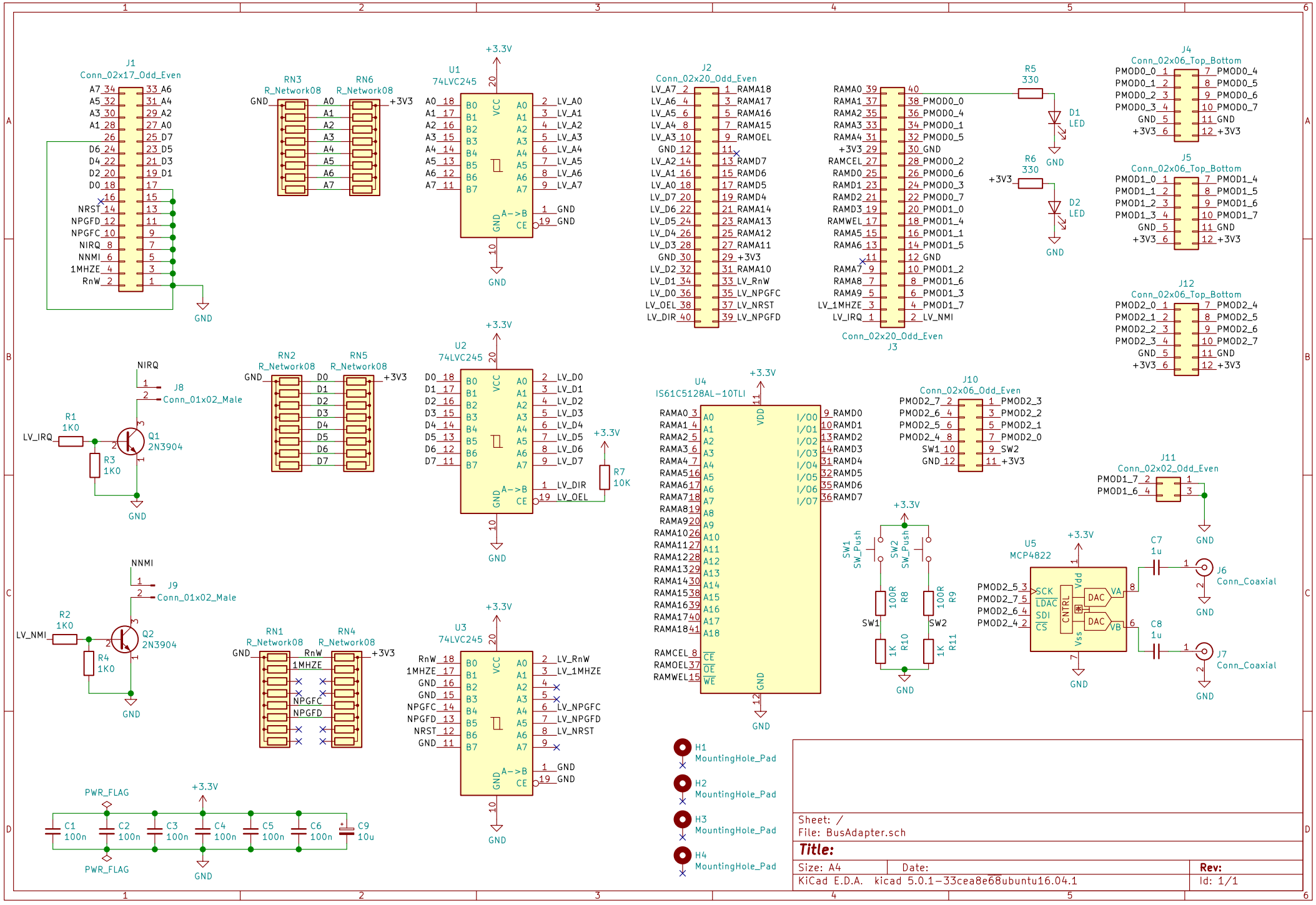
J1
Conn_02x17_Odd_Even
RN3
R_Network08
RN6
R_Network08
U1
74LVC245
J2
Conn_02x20_Odd_Even
R5
330
D1
LED
R6
330
D2
LED
J3
Conn_02x20_Odd_Even
J4
Conn_02x06_Top_Bottom
J5
Conn_02x06_Top_Bottom
J12
Conn_02x06_Top_Bottom
NIRQ
J8
Conn_01x02_Male
R1
1K0
Q1
2N3904
R3
1K0
RN2
R_Network08
RN5
R_Network08
U2
74LVC245
R7
10K
U4
IS61C5128AL-10TLI
J10
Conn_02x06_Odd_Even
J11
Conn_02x02_Odd_Even
NNMI
J9
Conn_01x02_Male
R2
1K0
Q2
2N3904
R4
1K0
RN1
R_Network08
RN4
R_Network08
U3
74LVC245
SW1
SW_Push
SW2
SW_Push
R8
100R
R9
100R
R10
1K
R11
1K
U5
MCP4822
C7
1u
C8
1u
J6
Conn_Coaxial
J7
Conn_Coaxial
H1
MountingHole_Pad
H2
MountingHole_Pad
H3
MountingHole_Pad
H4
MountingHole_Pad
PWR_FLAG
C1
100n
C2
100n
C3
100n
C4
100n
C5
100n
C6
100n
C9
10u
+3.3V
GND
Sheet: /
File: BusAdapter.sch
Title:
Size: A4
Date:
Rev:
KiCad E.D.A. kicad 5.0.1-33cea8e68ubuntu16.04.1
Id: 1/1