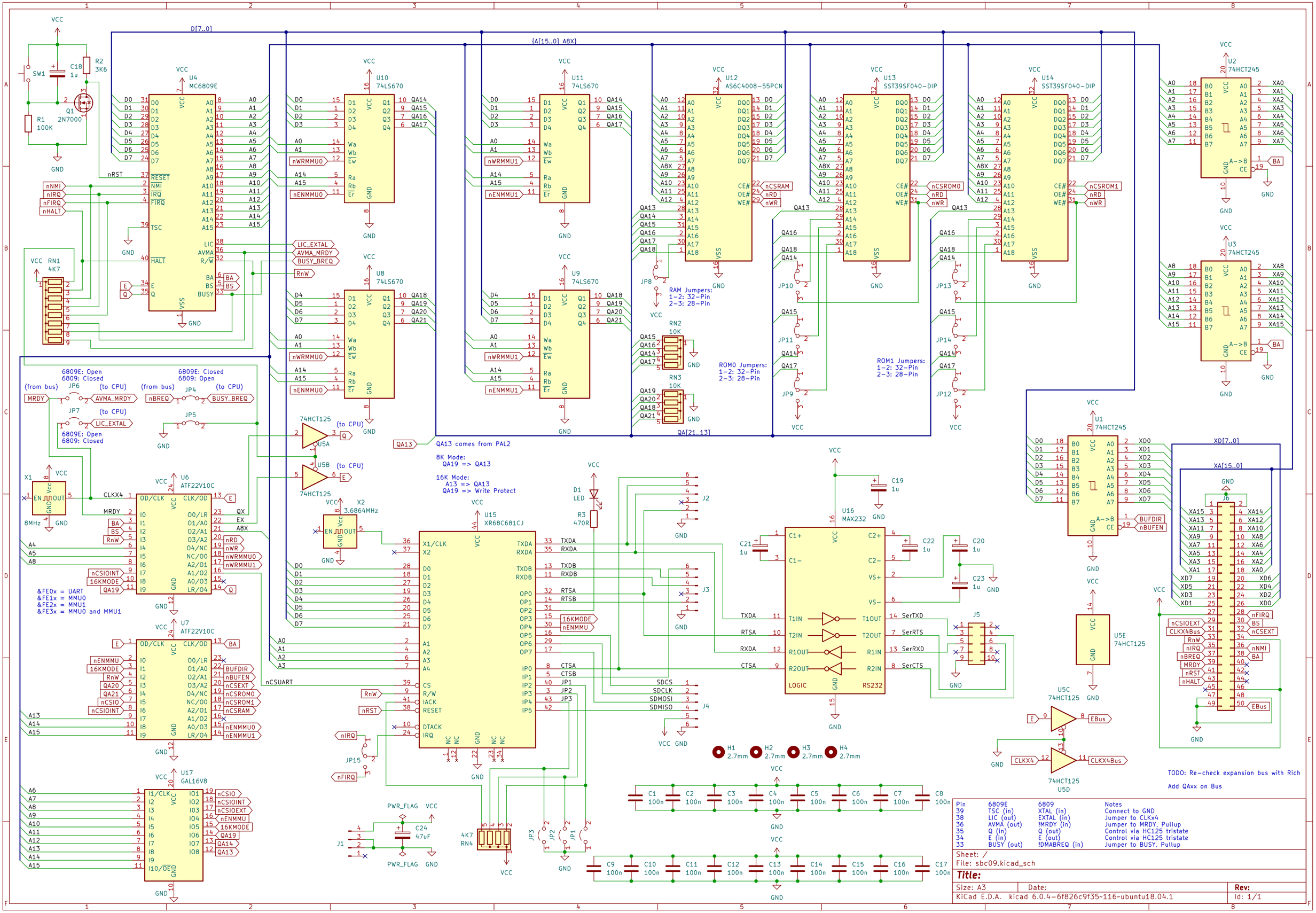

Pin	6809E	6809	Notes
39	TSC (in)	XTAL (in)	Connect to GND
38	LIC (out)	EXTAL (in)	Jumper to CLKx4
36	AVMA (out)	!MRDY (in)	Jumper to MRDY, Pullup
35	Q (in)	Q (out)	Control via HC125 tristate
34	E (in)	E (out)	Control via HC125 tristate
33	BUSY (out)	!DMABREQ (in)	Jumper to BUSY, Pullup

Sheet: /
File: sbc09.kicad_sch

Title:

Size: A3	Date:	Rev:
KiCad E.D.A. kicad 6.0.4-6f826c9f35-116-ubuntu18.04.1		Id: 1/1