REVISION RECORD			
LTR	ECO NO:	APPROVED:	DATE:

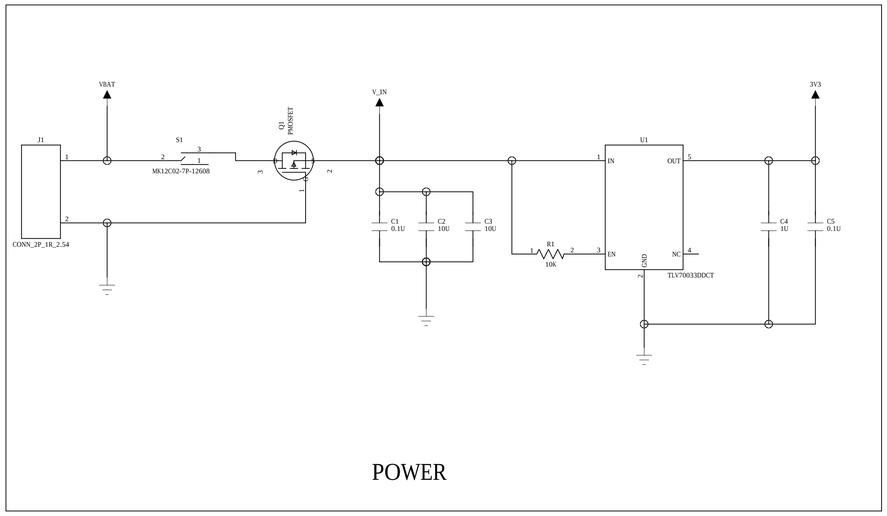

POWER

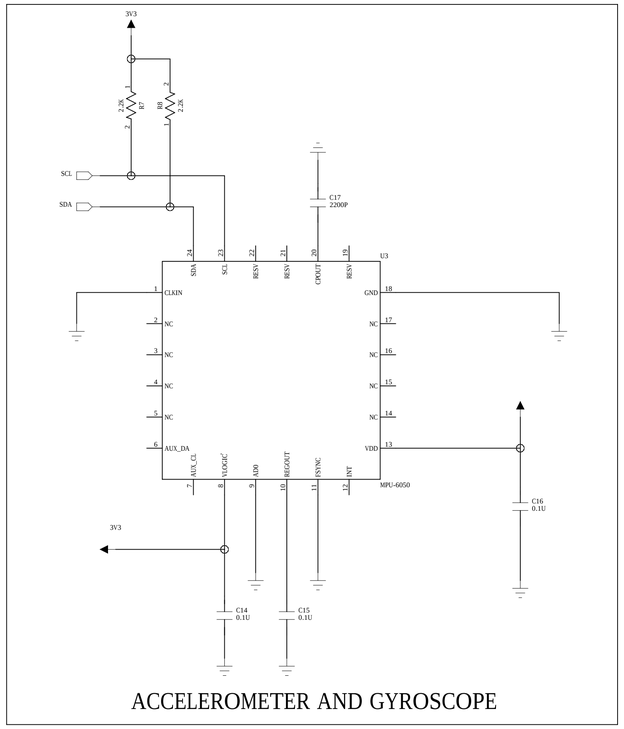

ACCELEROMETER AND GYROSCOPE

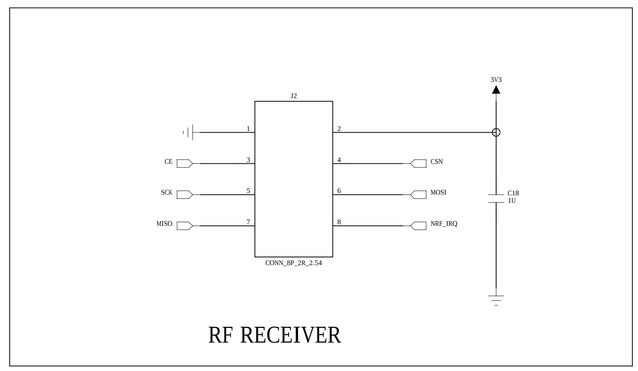

RF RECEIVER

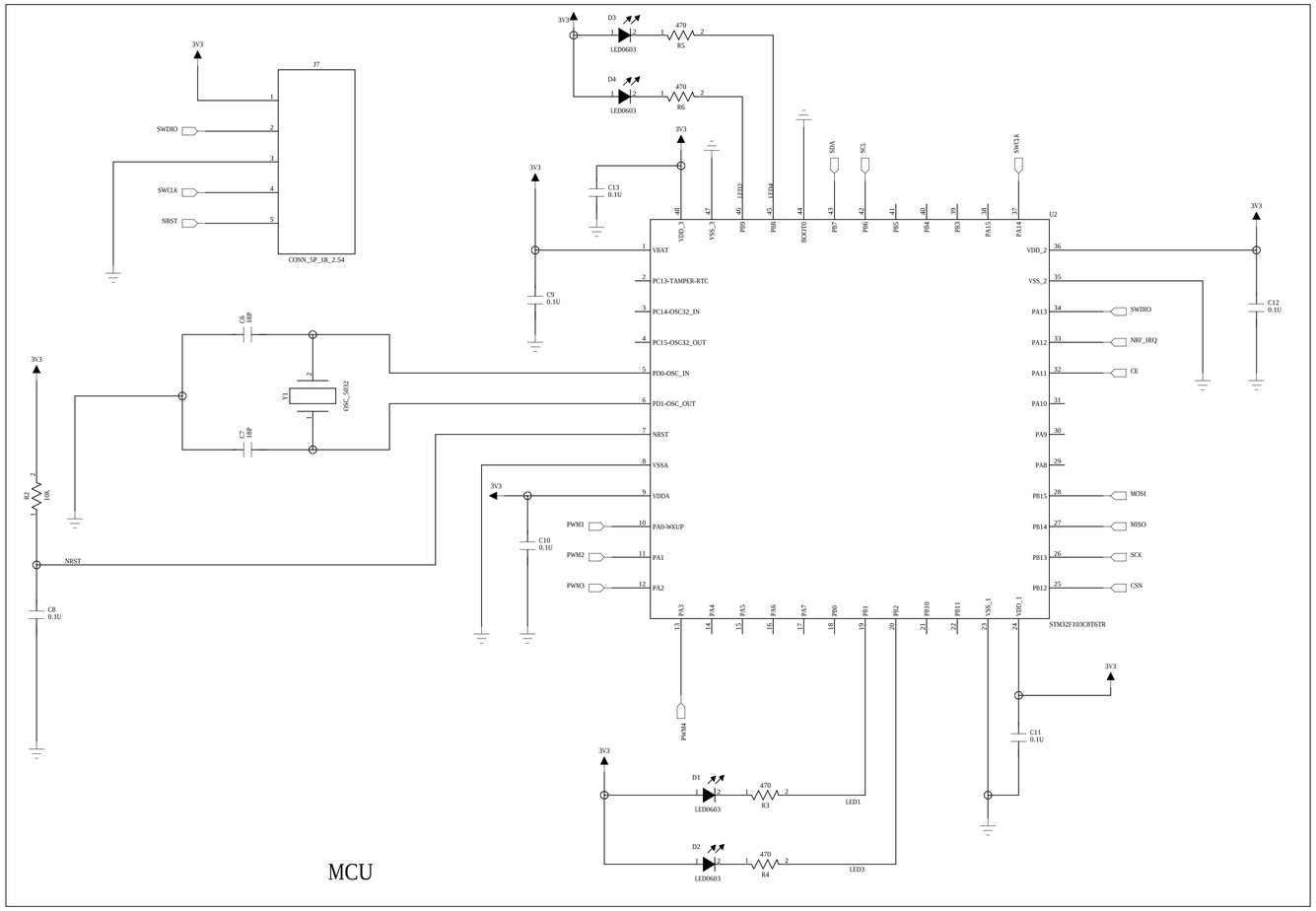

MCU

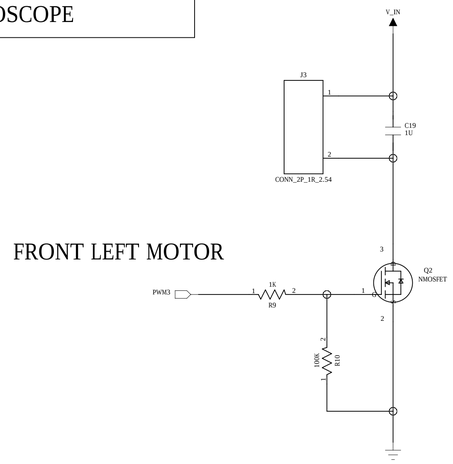

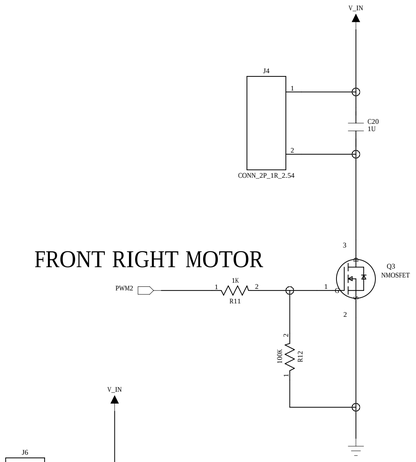

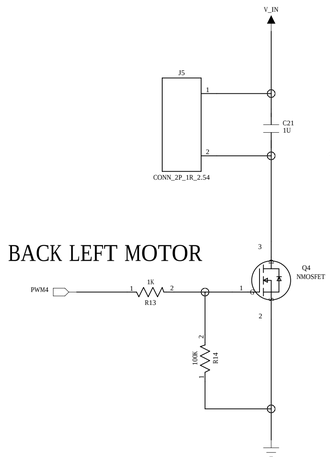

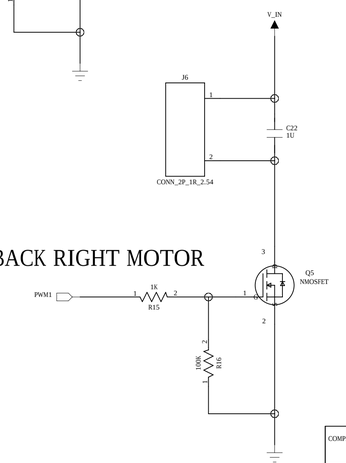

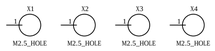

COMPANY: <Company Name>			
TITLE: <Title>			
DRAWN: <Drawn By>	DATED: <Drawn Date>		
CHECKED: <Checked By>	DATED: <Checked Date>		
QUALITY CONTROL: <QC By>	DATED: <QC Date>		
RELEASED: <Released By>	DATED: <Release Date>		
CODE: <Code>	SIZE: A1	DRAWING NO: <Drawing Number>	REV: <Revision>
SCALE: <Scale>		SHEET: # 1	