256-Channel, 16-Bit Charge-to-Digital AFE on Flex

ADI Confidential

AD71124

FEATURES

256-channel, charge-to-digital converter
16-bit resolution with no missing codes
Simultaneous sampling
User adjustable, full-scale range up to 32 pC
Down to 22 µs line time
Ultralow noise: 560 e– at 2 pC range
INL: ±2.5 LSBs or 38.125 ppm, ADC included
Very low power dissipation
Multiple functional power modes: from 1 mW per channel to 3 mW per channel
Multiple power-down and sleep modes: down to 0.005 mW per channel
Capable of measuring electron or hole collected charge
Tested and delivered with high density flex connections, system-on-flex (SOF)
LVDS/CMOS self clocked serial interface
Serial peripheral interface (SPI) daisy-chain configuration registers
On-board AFE timing sequencer
On-board temperature sensor and reference buffer

APPLICATIONS

Digital X-ray panel readouts
Photodiode sensor arrays
CT scanners
High channel count data acquisition systems (current or voltage inputs)

GENERAL DESCRIPTION

The AD71124 is a 256-channel, charge-to-digital, analog front end (AFE) mounted on high density flex. It can be directly mounted on a digital X-ray panel and is suitable for a large variety of digital X-ray or photodiode array applications, including direct conversion hole and electron sensing and dynamic imaging. The AD71124 contains 256 low power, low noise, low input current integrators with a correlated double sampling stage; simultaneous sample-and-hold; and high speed, high resolution AFEs with various sampling rates and 16-bit resolution.

All converted channel results are output on a single LVDS self clocked serial interface that significantly reduces external hardware.

An SPI-compatible serial interface allows configuration of the AFE using the SDI input. The SDO output allows the user to daisy-chain several AFEs on a single 3-wire bus.

An integrated AFE timing sequencer controls the sampling activity of the AFE. The sequencer is programmed via the SPI port and is timed by a single clock, ACLK.

ADI confidential
only for ABVZR

FUNCTIONAL BLOCK DIAGRAM

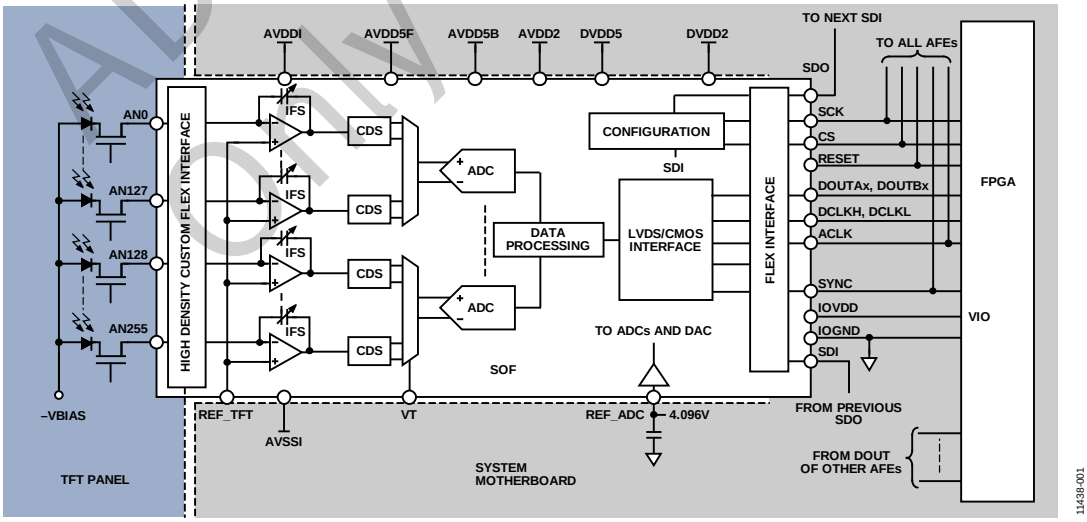

Figure 1.

Rev. SpB
Document Feedback

Information furnished by Analog Devices is believed to be accurate and reliable. However, no responsibility is assumed by Analog Devices for its use, nor for any infringements of patents or other rights of third parties that may result from its use. Specifications subject to change without notice. No license is granted by implication or otherwise under any patent or patent rights of Analog Devices. Trademarks and registered trademarks are the property of their respective owners.

One Technology Way, P.O. Box 9106, Norwood, MA 02062-9106, U.S.A.
Tel: 781.329.4700 ©2013–2016 Analog Devices, Inc. All rights reserved.
Technical Support www.analog.com

TABLE OF CONTENTS

Features ... 1
Applications ... 1
General Description ... 1
Functional Block Diagram ... 1
Revision History ... 2
Specifications ... 3
Timing Specifications ... 7
Absolute Maximum Ratings ... 8
ESD Caution ... 8
Pin Configuration and Function Descriptions ... 9
Typical Performance Characteristics ... 11
Theory of Operation ... 14
Circuit Information ... 14
Typical Connection Information ... 14
Converter Operation ... 15
Analog Front-End (AFE) Operation ... 15
Configuration Registers ... 29
Outline Dimensions ... 33
Ordering Guide ... 33

REVISION HISTORY

6/2016—Rev. SpA to Rev. SpB

Change to Features Section ... 1
Changes to Table 2 ... 7
Changes to Table 3 ... 8
Changes to Figure 15 ... 13
Changes to Figure 19 ... 15
Changes to AFE Sequencer Timing Section and Table 6 ... 16
Changes to Figure 22 ... 17
Added Figure 23; Renumbered Sequentially ... 18
Changes to Conversion Modes Section ... 18
Changes to Figure 29 ... 21
Deleted 2 × 2 Binning Section ... 26
Changes to Figure 38 ... 26
Changes to Table 12 ... 31
Changes to Ordering Guide ... 33

3/2014—Rev. Sp0 to Rev. SpA

Changes to Footnote 7, Table 1 ... 6
Changes to Device Operation Section and Figure 19 ... 15
Removed Calibration RAM Configuration Section, Table 12 and Table 13; Renumbered Sequentially, and Figure 42 through Figure 46; Renumbered Sequentially ... 28
Removed Initialization Sequence Section ... 31
Changes to Register 9, Bits[9:0], Table 12 ... 32

5/2013—Revision Sp0: Initial Version

ADI confidential Only for AbyZR

SPECIFICATIONS

AVDD5F = AVDD5B = AVDD5Q = DVDD5 = 5 V, AVDD2 = DVDD2 = 2.5 V, AVDDI = REF_TFT + 1.2 V, AVSSI = REF_TFT − 0.6 V, IOVDD = 2.5 V, REF_TFT = 1 V to 2.7 V, REF_ADC = 4.096 V, τ_{LPF} = 3.9 µs, t_{LINE} = 32 µs, C_F = 0.5 pF, C_{SOURCE} = 50 pF, T_J = 50°C, unless otherwise noted.

Table 1.

Parameter	Test Conditions/Comments	Min	Typ	Max	Unit
ANALOG INPUT					
Forward Charge Range (FSR)	Nominal range, 0 ≤ IFS[1] ≤ 63	0.5	0.5 × (IFS + 1)	32.0	pC
Integrator Feedback Capacitance (C_F)	Nominal range, 0 ≤ IFS[1] ≤ 63	0.125	0.125 × (IFS + 1)	8	pF
Charge Range Accuracy			±5		%
Charge Range Channel-to-Channel Matching	Within a chip		±0.5		%
	From chip to chip		±5		%
Reverse Charge Range			See Figure 31		% FSR
Integrator Common-Mode Voltage (REF_TFT)		0.6		2.7	V
Source Capacitance		0		200[2]	pF
Integrator Output Transconductance			4		mS
Input/Output Current	Integrator source or sink current				
	Normal mode		±40		µA
	Low Power 1 mode		±40		µA
	Low Power 2 mode		±10		µA
	Sleep mode		±2.5		µA
THROUGHPUT					
Line Time	τ_{LPF} = 1.3 µs	22	32		µs
LPF Time Constant (τ_{LPF})	Nominal range, 0 ≤ LPF[3] ≤ 7, ADCAVG[4] = 0	1.3		31.2	µs
LPF Time Constant Accuracy			±8		%
LPF Time Constant Drift			1250		ppm/°C
ACCURACY					
Resolution			16		Bits
Integral Linearity Error	REF_TFT + 8000 LSB		±2.5		LSB
Integral Linearity Error Match	Channel-to-channel across chips over full ADC range		±6		LSB
Crosstalk	Adjacent channels		0.07		%
	All other channels		0.01		%
Input Referred Random Noise[5]	Normal mode, τ_{LPF} = 3.9 µs, t_{LINE} = 32 µs, C_F = 0.5 pF, ADCAVG[4] = 0		585	690[6]	e^- rms
	Low Power 1 mode, τ_{LPF} = 3.9 µs, t_{LINE} = 32 µs, C_F = 0.5 pF, ADCAVG[4] = 0		740	835[6]	e^- rms
	Low Power 2 mode, τ_{LPF} = 3.9 µs, t_{LINE} = 32 µs, C_F = 0.5 pF, ADCAVG[4] = 0		745	855[6]	e^- rms
	Normal mode, τ_{LPF} = 11.7 µs, t_{LINE} = 100 µs, C_F = 0.5 pF, ADCAVG[4] = 1		460	595[6]	e^- rms
Input Referred Correlated Noise Ratio to Random Noise[7]	C_{SOURCE} = 0 pF		1:6		
Input Offset Voltage[8]			±2		mV
Input Offset Leakage Current			±1	±20	pA
Input Offset Current Drift	T_J = 25°C to 45°C		20		fA/°C
Input Offset Current Stability			0.25		fA/min
Range Sensitivity to REF_ADC			1:1		
Gain Drift			25		ppm/°C
Power Supply Sensitivity	AVDDI − AVSSI = 2.5 V at 10 kHz		40		dB
	AVDDI − AVSSI = 1.8 V at 10 kHz		20		dB

ADI confidential Only for AbyzR

Parameter	Test Conditions/Comments	Min	Typ	Max	Unit
ADC REFERENCE (REF_ADC)					
Input Reference Voltage Range	See the ADR444 data sheet	4.091	4.096	4.101	V
Input Reference Current			10		nA
VOLTAGE TEST INPUT (VT)[9]					
Analog Voltage Range		0.5		4.5	V
Input Impedance			2.5		MΩ
Resolution			16		Bits
Integral Linearity Error			±10		LSB
Transition Noise			2		LSB
TEMPERATURE SENSOR (TEMP)					
Resolution			16		Bits
Temperature Sensitivity			17		LSB/°C
DIGITAL INPUTS					
CMOS Logic Levels[10]					
Input Voltage Low (V_{IL})		−0.3		+0.6	V
Input Voltage High (V_{IH})		2.0		5.25	V
Input Current Low (I_{IL})		−1		+1	µA
Input Current High (I_{IH})		−1		+1	µA
DIGITAL OUTPUTS					
Output Voltage Low (V_{OL})	I_{SINK} = +500 µA, SDO			0.4	V
Output Voltage High (V_{OH})	I_{SOURCE} = −500 µA, SDO	IOVDD − 0.3			V
LVDS INPUT/OUTPUT					
Data Format			Serial LVDS straight binary		
Differential Output Voltage (V_{OD})[11]	R_L = 100 Ω	225	350	400	mV
Common-Mode Output Voltage (V_{OCM})[11]	R_L = 100 Ω	1000	1250	1300	mV
Differential Input Voltage (V_{ID})		100		650	mV
Common-Mode Input Voltage (V_{ICM})		100		1575	mV
Differential Input Impedance	DCLKH/DCLKL inputs		100		Ω
POWER MODE SWITCHING TIMES					
Enable Time	Into sleep		0.1		ms
	Into power-down (REFDACDIS[12] is low)[13]		1.0		ms
Disable Time	Out of sleep		0.1		ms
	Out of power-down (REFDACDIS[12] is low)[13]		0.1		ms
POWER SUPPLIES[14]					
AVDD2, DVDD2		2.375	2.5	2.625	V
AVDD5F, AVDD5B, DVDD5		4.75	5	5.25	V
AVDD5Q		AVDD5F − 0.2	AVDD5F	5.25	V
AVDDI		REF_TFT + 1.2			V
AVSSI				REF_TFT − 0.6	V
AVDDI to AVSSI		1.8		2.7	V
AVDD5F to AVSSI		1.8		5.25	V
AVDD5Q to AVDDI		−0.2			V
IOVDD		2.3	2.5	2.7	V
SUPPLY CURRENT[15]					
Power-Down Mode					
IOVDD			50		µA
DVDD2			35		µA
DVDD5			75		µA
AVDD2			15		µA
AVDD5B			30		µA
AVDD5F			65		µA
AVDD5Q			10		µA
AVDDI			85		µA
AVSSI			−10		µA

ADI confidential Only for AbyzR

Parameter	Test Conditions/Comments	Min	Typ	Max	Unit
Sleep Mode					
IOVDD			50		µA
DVDD2			35		µA
DVDD5			110		µA
AVDD2			300		µA
AVDD5B			850		µA
AVDD5F			3.3		mA
AVDD5Q			10		µA
AVDDI			22		mA
AVSSI			−22		mA
Functional Sleep Mode					
IOVDD			10		mA
DVDD2			710		µA
DVDD5			70		µA
AVDD2			8.5		mA
AVDD5B			28		mA
AVDD5F			3.5		mA
AVDD5Q			10		µA
AVDDI			21		mA
AVSSI			−21		mA
Low Power 2 Mode					
IOVDD			17	22.5	mA
DVDD2			600		µA
DVDD5			200		µA
AVDD2			9.5	12	mA
AVDD5B			27	37	mA
AVDD5F			8.5	10	mA
AVDD5Q			10		µA
AVDDI			65	80	mA
AVSSI		−80	−65		mA
Low Power 1 Mode					
IOVDD			17	23	mA
DVDD2			600		µA
DVDD5			570		µA
AVDD2			9.5	12	mA
AVDD5B			27	37	mA
AVDD5F			28.5	34	mA
AVDD5Q			10		µA
AVDDI			65	80	mA
AVSSI		−80	−65		mA
Normal Mode					
IOVDD			17	23	mA
DVDD2			600		µA
DVDD5			570		µA
AVDD2			9.5	12	mA
AVDD5B			27		mA
AVDD5F			28.5	35	mA
AVDD5Q			10		µA
AVDDI			235	285	mA
AVSSI		−285	−235		mA

ADI confidential Only for AbyzR

Parameter	Test Conditions/Comments	Min	Typ	Max	Unit
Power Dissipation[15]					
Power-Down Mode			1.2		mW
	REFDACDIS[16] is high, PDTFTEN[17] is high		16		mW
	REFDACDIS[16] is low, PDTFTEN[17] is high		21		mW
Sleep Mode	REFDACDIS[16] is high		56		mW
	REFDACDIS[16] is low		61		mW
Functional Sleep Mode			260		mW
Low Power 2 Mode			363		mW
Low Power 1 Mode			465		mW
Normal Mode			770		mW
Power Dissipation per Channel					
Power-Down Mode			0.005		mW/ch
	REFDACDIS[16] is low, PDTFTEN[17] is high		0.082		mW/ch
	REFDACDIS[16] is high, PDTFTEN[17] is high		0.063		mW/ch
Sleep Mode	REFDACDIS[16] is high		0.22		mW/ch
	REFDACDIS[16] is low		0.24		mW/ch
Functional Sleep Mode			1.02		mW/ch
Low Power 2 Mode			1.42		mW/ch
Low Power 1 Mode			1.82		mW/ch
Normal Mode			3.00		mW/ch
TEMPERATURE RANGE	T_J = 50°C	0		70	°C

[1] The six integrator full-scale selection bits (IFS) in Configuration Register 0 allow the user to select the full-scale range of the integrator by adjusting the internal feedback capacitor.
[2] Source capacitances > 200 pF are feasible with slower AFE timing.
[3] The three low-pass filter time constant bits (LPF) in Configuration Register 1 allow the user to select the time constant of the LPF at the output of the integrator. For 0 µs, filter acceleration must be programmed via Configuration Register 7. See the Analog Front-End (AFE) Operation section for more details.
[4] ADCAVG (Bit 1 of Configuration Register 1) enables ADC averaging. If enabled, the LPF time constants double. For example, 3 µs becomes 6 µs. See the bit description in Table 12 for more information.
[5] For the 32 µs line time, integrator reset time is 3 µs, CDS1 and CDS2 times are 3.6 × τ_{LPF}, and there is 1 µs between CDS1 and CDS2. For the 100 µs line time, integrator reset time is 7 µs, CDS1 and CDS2 times are 3.85 × τ_{LPF}, and there is a period of 3 µs between CDS1 and CDS2. Table 7 in the Noise Considerations section illustrates the noise for complete settling of the ADC, where CDS times are 11 × τ_{LPF}.
[6] Guaranteed, not tested.
[7] Average noise is equal to the root-sum square of the correlated noise and random noise. Correlated noise can be calculated by averaging the results of all channels in a given sample. The standard deviation of these average results across N number of samples gives the correlated noise. The average noise can be calculated as the standard deviation of each individual channel averaged together. The random noise is determined by de-RSSing the correlated noise from the average noise.
[8] Input offset voltage is measured with respect to REF_TFT.
[9] The output code of VT (VT_{CODE}) can be translated to a voltage using the following formula: VT = (VT_{CODE} × 61.035 µV) + 0.5 V. For example, if VT = 0.5 V, VT_{CODE} = 0 LSB.
[10] The CMOS inputs are all 5 V tolerant.
[11] The ANSI-644 specification for V_{OD} is 247 mV minimum and 454 mV maximum; for V_{OCM}, it is 1125 mV minimum and 1375 mV maximum.
[12] Keeping the internal reference DAC enabled allows for the fastest switching time because all capacitors that are connected to REF_OUT are biased to their final voltage. If the reference DAC is disabled by setting REFDACDIS (Bit 7 of Configuration Register 2) high, the switching time is dominated by the time constant that is associated with the capacitance seen by REF_OUT.
[13] Power mode switching times into and out of these modes are longer when REFDACDIS is high because REF_OUT charges and discharges any external capacitance connected to it.
[14] See the Power Supply Restrictions and Sequencing section for constraints with the AFE power supplies.
[15] See the Power Optimization (Sleep Mode and Power-Down Modes) section for details.
[16] When REFDACDIS (Bit 7 of Configuration Register 2) is high, the on-board reference DAC is disabled. See the Power Optimization (Sleep Mode and Power-Down Modes) section for details.
[17] When PDTFTEN (Bit 8 of Configuration Register 2) is high, the input stage of the integrator is biased to REF_TFT in power-down mode. See the Power Optimization (Sleep Mode and Power-Down Modes) section for more details.

ADI confidential Only for AbyzR

TIMING SPECIFICATIONS

T_J = 0°C to 70°C, IOVDD = 2.3 V to 2.7 V, unless otherwise noted.

Table 2.

Parameter	Symbol	Min	Typ	Max	Unit
Burst Duration	t_{BURST}	645	$t_{DCLK} \times (64 + M^1)$		ns
DCLKH/DCLKL LVDS Clock Period	t_{DCLK}	5		20	ns
DCLKH/DCLKL Frequency	f_{DCLK}	50		200	MHz
DCLKH/DCLKL to DOUTxH/DOUTxL Delay	t_{DDOUT}	0	4	7	ns
DCLKH/DCLKL to DCLKOH/DCLKOL Delay (Echo Clock Mode)	t_{DCO}	0	4	7	ns
DCLKOH/DCLKOL to DOUTxH/DOUTxL Delay (Echo Clock Mode)	t_D	−1	0	+1	ns
INTRST Open/Close, CDS1 Close, CDS2 Close to DCLKH/DCLKL Delay	$t_{DAFEDCLK}$	520			ns
SYNC to DCLKH/DCLKL Rising or Falling Edge	$t_{SYNCDCLK}$	20			ns
SYNC to ACLK Rising or Falling Edge	$t_{SYNCACLK}$	20			ns
SYNC High Time	t_{SYNCH}	10			ns
ACLK Clock Period	t_{ACLK}	20			ns
SCK SPI Clock Period	t_{SCK}	20			ns
SCK High Time	t_{SCKH}	10			ns
SCK Low Time	t_{SCKL}	10			ns
SCK Rising Edge to SDO Valid Delay	t_{DSDO}	0		15	ns
SDI Valid Setup Time from SCK Falling Edge	$t_{SSDISCK}$	5			ns
SDI Valid Hold Time from SCK Falling Edge	$t_{HSDISCK}$	0			ns
CS Valid Setup Time from SCK Rising Edge	t_{SCSSCK}	10			ns
CS Valid Hold Time from SCK Falling Edge	t_{HCSSCK}	10			ns
RESET High Time	t_{RESET}	10			ns
RESET to CS Rising Edge	$t_{RESETCS}$	4000			ns

[1] M is the number of muted clocks in the burst pattern (see the Conversion Modes section for more details).

ADI confidential
Only for AbyzR

ABSOLUTE MAXIMUM RATINGS

Table 3.

Parameter	Rating
Analog Inputs	
All AN Pins	±0.3 V to REF_TFT
REF_TFT to AGND[1]	−0.3 V to +2.3 V
REF_TFT to AVSSI	−0.3 V to +2.3 V
REF_TFT to AVDDI	−0.3 V to +3 V
REF_INT to AGND[1]	−0.3 V to AVDD5B + 0.3 V
REF_ADC to ADC GND[1]	−0.3 V to AVDD5B + 0.3 V
VT to AGND[1]	−0.3 V to AVDD5B + 0.3 V
Analog Input Current	
All AN Pins	±1.5 mA
Supply Voltage	
AVDDI to AGND[1]	−0.3 V to +5.3 V
AVSSI to AGND[1]	−0.3 V to +2.3 V
AVDDI to AVSSI	−0.3 V to +3 V
AVDD5F, AVDD5Q to AGND[1]	−0.3 V to +6 V
AVDD5B, DVDD5 to ADC GND[1]	−0.3 V to +6 V
AVDD2, DVDD2 to ADC GND[1]	−0.3 V to +3 V
IOVDD to IOGND (Digital GND)[1]	−0.3 V to +3 V
Digital Inputs to IOGND (Digital GND)[1]	−0.3 V to +6 V
LVDS Inputs to IOGND (Digital GND)[1]	−0.3 V to IOVDD + 0.3 V
Digital Outputs to IOGND (Digital GND)[1]	−0.3 V to IOVDD + 0.3 V
Storage Conditions	
Factory Sealed	20°C ± 15°C, 50% ± 20% RH,[2] 1 year
Unsealed/Opened	25°C ± 3°C, 50% ± 10% RH,[2] 3 months
Nitrogen Purged Dry Box	25°C ± 3°C, 30% max RH,[2] 6 months

[1] See Figure 17 for the ground and shield connection diagram. Note that AGND = AGND5Q = AGND5F, ADC GND = AGND5B = AGND2 = DGND2 = DGND5, and digital GND = IOGND.
[2] RH means relative humidity.

Stresses at or above those listed under Absolute Maximum Ratings may cause permanent damage to the product. This is a stress rating only; functional operation of the product at these or any other conditions above those indicated in the operational section of this specification is not implied. Operation beyond the maximum operating conditions for extended periods may affect product reliability.

ESD CAUTION

ESD (electrostatic discharge) sensitive device. Charged devices and circuit boards can discharge without detection. Although this product features patented or proprietary protection circuitry, damage may occur on devices subjected to high energy ESD. Therefore, proper ESD precautions should be taken to avoid performance degradation or loss of functionality.

ADI confidential Only for AbyzR

PIN CONFIGURATION AND FUNCTION DESCRIPTIONS

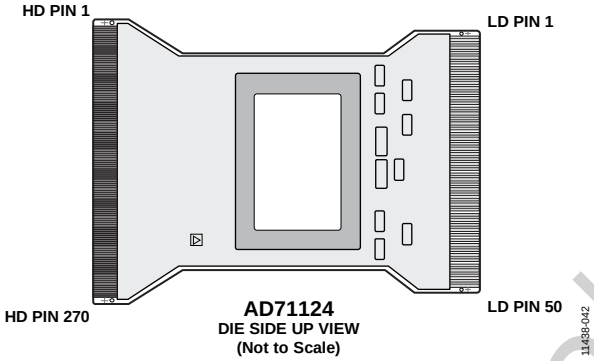

Figure 2. Pin Configuration

Table 4. Pin Function Descriptions

Pin No.[1]	Mnemonic	Type[2]	Description
HD8 to HD263	AN0 to AN255	AI	Analog Charge Inputs. Connect these pins to the thin film transistor (TFT) panel.
LD10	VT	AI	Voltage Test Input. Provides a direct connection to the internal ADC.
LD12	REF_TFT	AI	Integrator Positive Input Voltage. The voltage range is from 0.6 V to 2.7 V and is defined by the panel requirements of the user. This is a sensitive node that requires good decoupling. It can be driven from REF_OUT on the system motherboard.
LD15	REF_ADC	AI	Reference Voltage Input. A high impedance input at 4.096 V nominal, using a single ADR444.
LD13	REF_INT	AI	Optional External Integrator Reset Voltage. If the integrator is set to a voltage other than REF_TFT, apply a voltage to REF_INT and set EXTRST (Bit 2 of Configuration Register 1) high. The voltage range is 0.5 V to 4.5 V. If REF_INT is unused, it must be tied to REF_OUT.
LD14	REF_OUT	AO	Reference Output Voltage. This voltage is the output of the on-board reference DAC, which has a range from 0.5 V to 4.5 V. The DAC is controlled via REFDAC (Bits[7:0]) of Configuration Register 3. The REF_OUT pin can supply the REF_INT and REF_TFT voltages. This node requires good decoupling on the system motherboard. It is recommended that this decoupling be tied to AGND5Q before connecting to AGND (see Figure 32).
LD22	RESET	DI	Asynchronous Reset CMOS Input. When high, this input resets the digital circuitry and initializes the configuration to its default value. It must be applied after each power-up.
LD24	SYNC	DI	Conversion Synchronization CMOS Input. With DCLKH/DCLKL and ACLK, SYNC defines the start of a line conversion.
LD33, LD34	DOUTAH, DOUTAL	DO	Conversion Data Self Clocked LVDS Outputs. The conversion data is output serially on these pins. The data-words are output per DCLKH/DCLKL cycle.
LD30, LD31	DOUTBH, DOUTBL	DO	Conversion Data Self Clocked LVDS Outputs. These outputs are used only in double data rate mode, which is enabled by the DOUTMODE bit (Bit 2 of Configuration Register 2).
LD39, LD40	DCLKH, DCLKL	DI	Conversion Data LVDS Clock Inputs. This clock controls the internal conversion process and shifts out the conversion results It is recommended that DCLKH/DCLKL be kept inactive when SCK is active. There is an internal 100 Ω termination resistor for DCLKH/DCLKL.
LD23	ACLK	DI	Analog Front End (AFE) Clock. This CMOS clock controls the AFE timing sequencer, which defines the sampling of the AFE.
LD36, LD37	DCLKOH, DCLKOL	DO	Optional Echo of the Conversion Data LVDS Clock. These clock outputs are a duplicate of DCLKH/DCLKL and can be used for data readout synchronization of multiple AD71124 devices. They are enabled by the ECHOCLK bit (Bit 1 of Configuration Register 2).
LD25	CS	DI	Configuration Write CMOS Input. When CS is high, the contents of the configuration registers are shifted in and out by SCK. The configuration register is double-buffered and is updated only on the falling edge of CS. CS must be kept low during conversion.
LD26	SCK	DI	Configuration Serial Data Clock CMOS Input. SCK pulses are ignored when CS is low. It is recommended that SCK be kept low during conversion (when ACLK or DCLKH/DCLKL is active).
LD28	SDI	DI	Configuration Serial Data CMOS Input. SDI is used as a data input of the configuration registers. It allows the user to daisy-chain the contents of the configuration registers of many AD71124 devices onto a single serial line. The digital data level on SDI is sampled on the SCK falling edge.
LD27	SDO	DO	Configuration Serial Data CMOS Output. The 16 bits of the configuration register are output on this pin. It is synchronized to SCK and output on the SCK rising edge.

ADI Confidential Only for AD71124

Pin No.[1]	Mnemonic	Type[2]	Description
LD4	AVDDI	P	Integrator High Power Supply. This is the high supply voltage for the integrator, which has a minimum voltage of REF_TFT + 1.2 V. The difference between AVDDI and AVSSI must be in the range of 1.8 V to 2.7 V.
LD5	AVSSI	P	Integrator Low Power Supply. This is the low supply voltage for the integrator, which has a maximum voltage of REF_TFT − 0.6 V. The difference between AVDDI and AVSSI must be in the range of 1.8 V to 2.7 V. If REF_TFT is low enough, AVSSI can be connected to AGND (see Figure 17).
LD8	AVDD5F	P	Analog Front-End Power Supply, 5 V Nominal.
LD6	AVDD5Q	P	Quiet Power Supply, 5 V Nominal. This connection usually comes from AVDD5B.
LD20	AVDD5B	P	Analog Back-End Power Supply, 5 V Nominal.
LD17	AVDD2	P	Analog Power Supply, 2.5 V Nominal.
LD47	DVDD5	P	Digital Power Supply, 5 V Nominal.
LD45	DVDD2	P	Digital Power Supply, 2.5 V Nominal.
LD43	IOVDD	P	Digital Input/Output Power Supply, 2.5 V Nominal.
LD9	AGND5F	P	High Voltage Analog Power Supply Ground.
LD19	AGND5B	P	High Voltage Analog Power Supply Ground.
LD7	AGND5Q	P	Quiet Analog Power Supply Ground.
LD18	AGND2	P	Low Voltage Analog Power Supply Ground.
LD46	DGND5	P	Digital Power Supply Ground.
LD44	DGND2	P	Digital Power Supply Ground.
LD42	IOGND	P	Digital Input/Output Power Supply Ground.
HD7, HD264	GUARD1, GUARD2	AO	Guard. These are traces driven to the same potential as REF_TFT. They do not need to be connected at the panel.
HD1 to HD4, LD1	PASS-THRU1		Pass-Through Connections. These are connections that can pass through a signal or voltage level from the TFT to the X-ray panel motherboard. These connections do not connect to the die. The number of PASS-THRU connections is variable.
HD5, LD2	PASS-THRU2		Pass-Through Connections. These are connections that can pass through a signal or voltage level from the TFT to the X-ray panel motherboard. These connections do not connect to the die. The number of PASS-THRU connections is variable.
HD6, LD3	PASS-THRU3		Pass-Through Connections. These are connections that can pass through a signal or voltage level from the TFT to the X-ray panel motherboard. These connections do not connect to the die. The number of PASS-THRU connections is variable.
HD265, LD48	PASS-THRU4		Pass-Through Connections. These are connections that can pass through a signal or voltage level from the TFT to the X-ray panel motherboard. These connections do not connect to the die. The number of PASS-THRU connections is variable.
HD266, LD49	PASS-THRU5		Pass-Through Connections. These are connections that can pass through a signal or voltage level from the TFT to the X-ray panel motherboard. These connections do not connect to the die. The number of PASS-THRU connections is variable.
HD267 to HD270, LD50	PASS-THRU6	AI	Pass-Through Connections. These are connections that can pass through a signal or voltage level from the TFT to the X-ray panel motherboard. These connections do not connect to the die. The number of PASS-THRU connections is variable.
LD11, LD16, LD21, LD29, LD32, LD35, LD38, LD41	SHIELD1 to SHIELD8	AI	Shield Connections. These connections serve multiple purposes. They isolate references, analog supplies, and digital inputs from each other. They also provide impedance matching for the digital LVDS inputs/outputs of the AD71124 on the flex substrate. These connections do not connect to the die. It is recommended that SHIELD1 be tied to AGND5Q, SHIELD2 be tied to the ground of the external reference, SHIELD3 be tied to AGND5B, and SHIELD4 to SHIELD8 be tied to IOGND.

[1] Contact Analog Devices, Inc., for the most up-to-date package outline drawing.
[2] AI = analog input, AO = analog output, DI = digital input, DO = digital output, and P = power.

ADI Confidential
Only for MyzR

TYPICAL PERFORMANCE CHARACTERISTICS

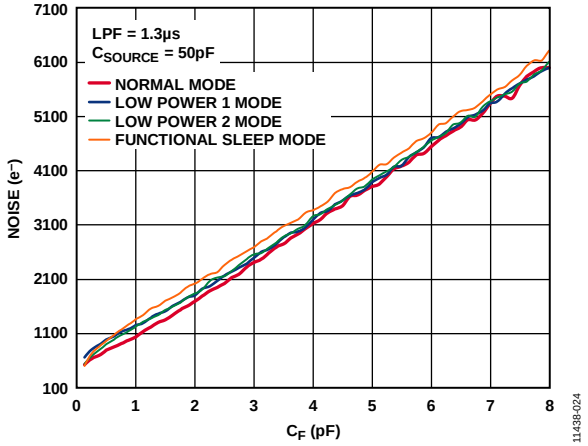

Figure 3. Noise vs. Power Mode and Integration Capacitor (C_F), ADCAVG = Off

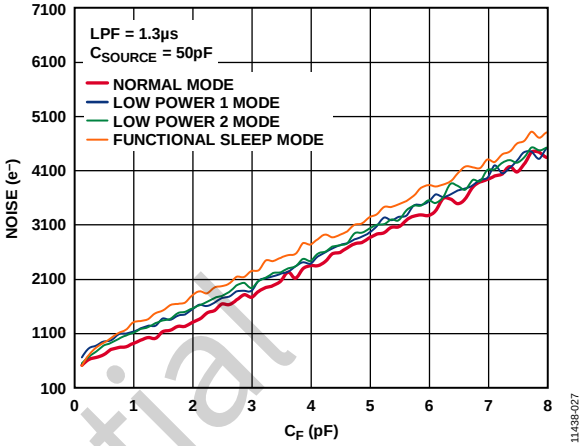

Figure 6. Noise vs. Power Mode and C_F, ADCAVG = On

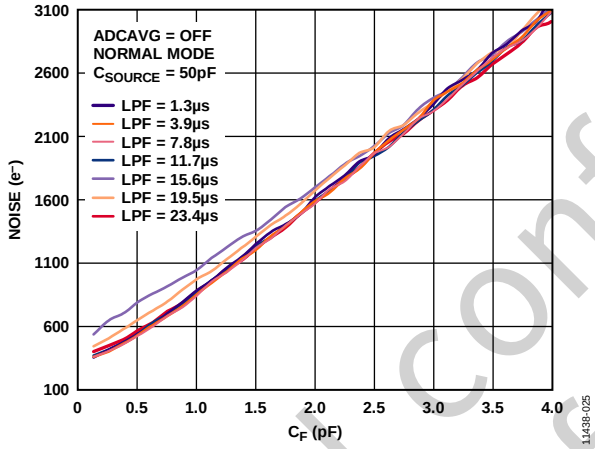

Figure 4. Noise vs. Low-Pass Filter (LPF) and C_F

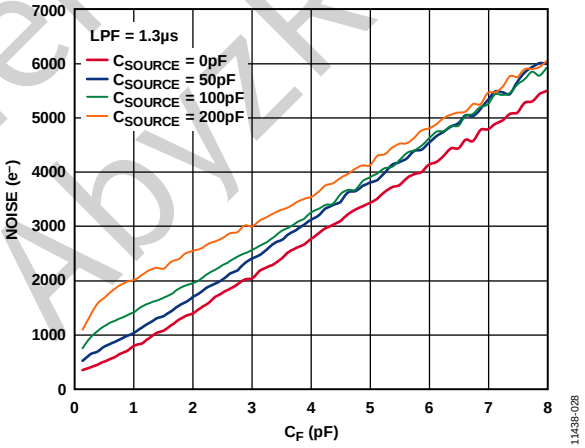

Figure 7. Noise vs. Source Capacitance (C_{SOURCE}) and C_F

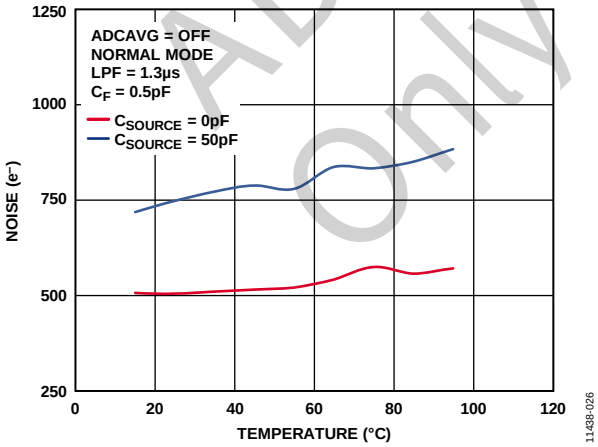

Figure 5. Noise vs. Temperature

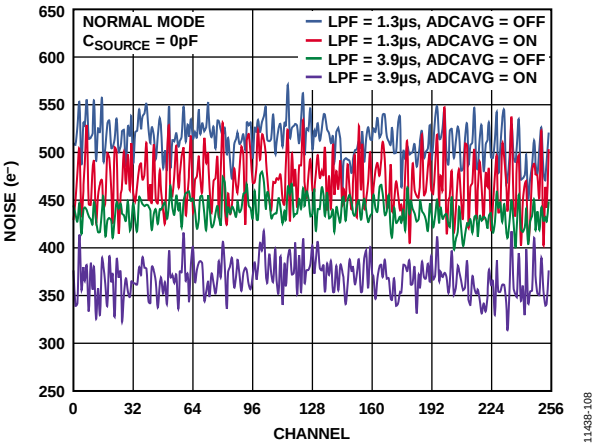

Figure 8. Noise vs. Channel

ADI confidential Only for AbyzR

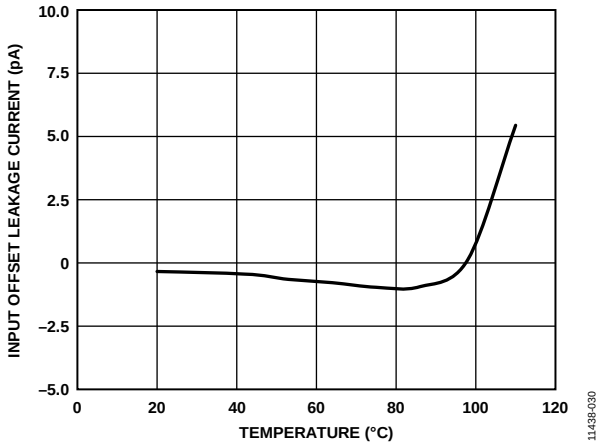

Figure 9. Input Offset Leakage Current vs. Temperature

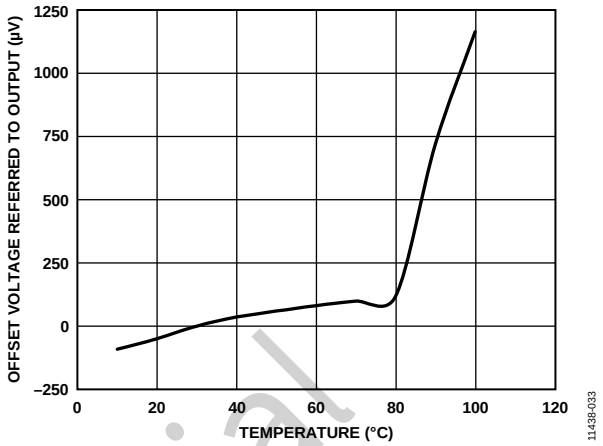

Figure 12. Total Offset Voltage vs. Temperature

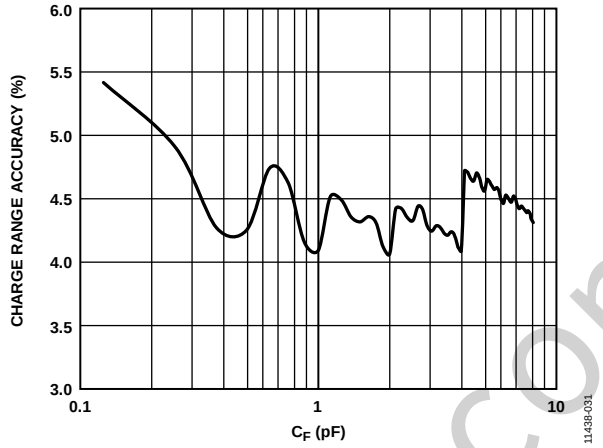

Figure 10. Charge Range Accuracy vs. C_F

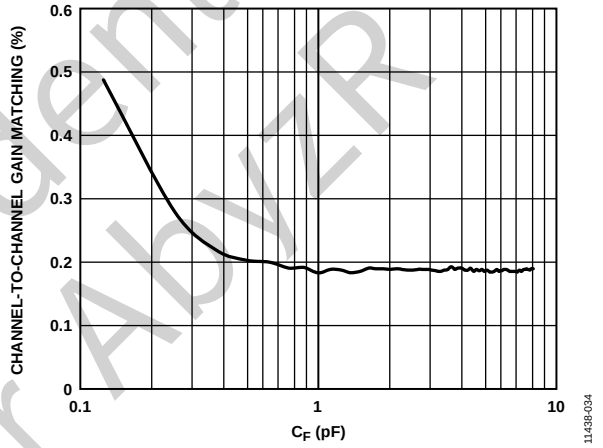

Figure 13. Channel-to-Channel Gain Matching vs. C_F

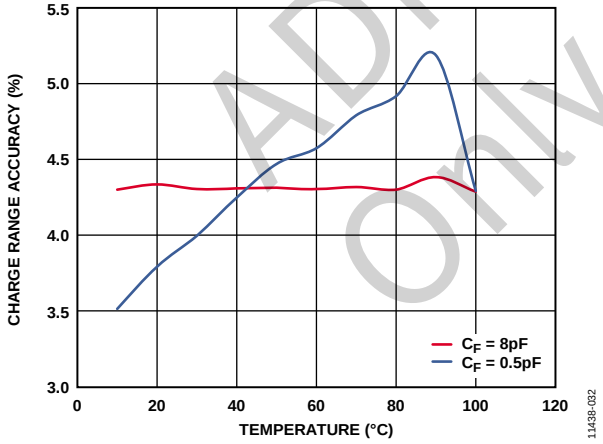

Figure 11. Charge Range Accuracy vs. Temperature

ADI confidential
only for AbyZR

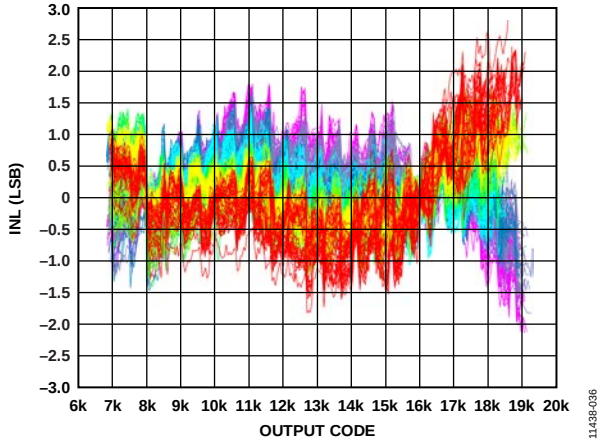

Figure 14. Integral Nonlinearity (INL)

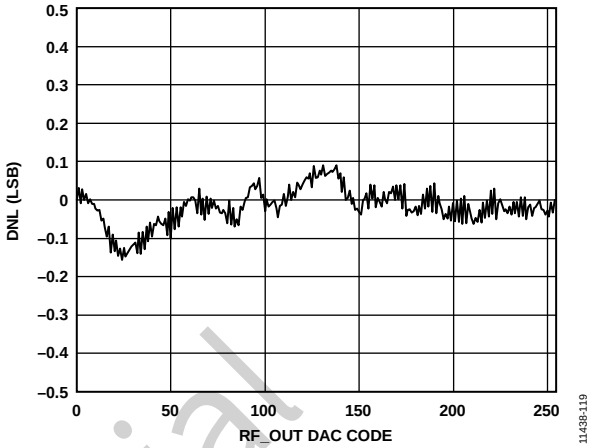

Figure 15. Differential Nonlinearity (DNL)

ADI confidential
Only for AbyzR

THEORY OF OPERATION

CIRCUIT INFORMATION

The AD71124 is a 256-channel, simultaneous sampling, high dynamic range, low power, charge-to-digital analog front end (AFE). Based on an innovative architecture, the AFE consists of 256 low noise integrators, low-pass filters (LPFs), and correlated double samplers (CDSs) that are multiplexed into a high speed, 16-bit, analog-to-digital converter (ADC).

The AD71124 is a highly configurable device. Among the options that can be configured by the user are the integrator gain; the AFE timing sequence; the on-board, programmable reference DAC; the time constant of the front-end LPF; and the data output modes.

TYPICAL CONNECTION INFORMATION

In a typical application, the AD71124 requires only a few external components (see Figure 16): at least two low dropout linear regulators, such as the ADP7104 (required for the 5.0 V and 2.5 V supplies); a low noise 4.096 V voltage reference, such as the ADR444; a simple, low cost field programmable gate array (FPGA); and decoupling capacitors. The sensitive reference nodes can be connected together in a system with multiple AD71124 devices (see the Reference Considerations section).

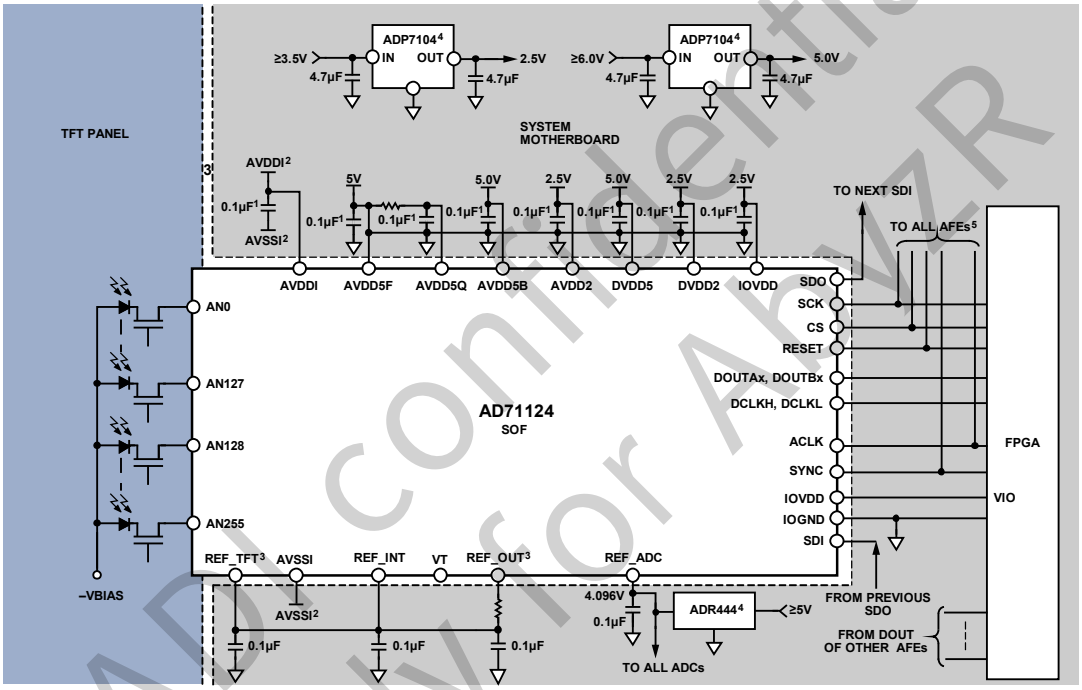

[1]ADDITIONAL BULK CAPACITORS MAY BE REQUIRED ON THE MOTHERBOARD. THE FLEX HAS 0.1µF CAPACITORS FOR THE SUPPLIES.
[2]SUPPLY VOLTAGE FOR AVDDI AND AVSSI CAN BE SET FOR MINIMUM POWER DISSIPATION. AVDDI MUST BE 1.8V ABOVE AVSSI AND 1.2V ABOVE REF_TFT.
[3]REF_TFT CAN BE ANY VALUE BETWEEN 0.6V AND 2.7V. IT IS RECOMMENDED THAT REF_OUT SUPPLY REF_TFT.
[4]REFER TO THE ADR444 AND ADP7104 PRODUCT DATA SHEET FOR INPUT VOLTAGE RANGE, AND PRODUCT CONFIGURATION. DEPENDING ON NUMBER OF AD71124s IN A SYSTEM, THERE MAY BE OTHER OPTIONS FOR VOLTAGE REGULATORS.
[5]THE AD71124 CAN BE DAISY-CHAINED TO OTHER AD71124s.

11438-002

Figure 16. Typical Applications Diagram

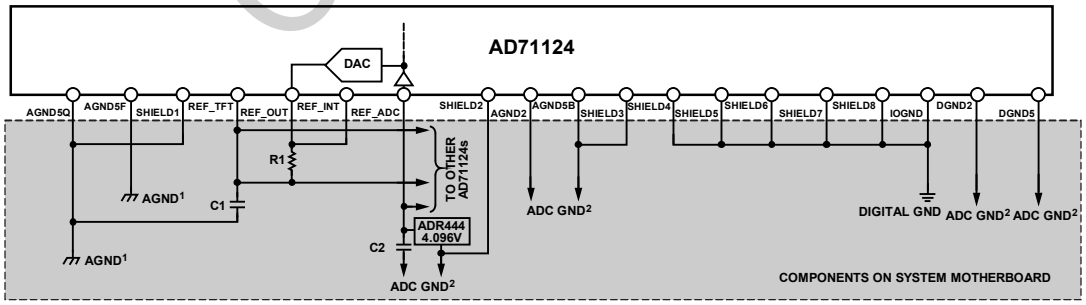

[1]AGND = AGND5Q = AGND5F
[2]ADC GND = AGND5B = AGND2 = DGND2 = DGND5
[3]DIGITAL GND = IOGND

11438-043

Figure 17. Ground and Shield Connection Diagram

ADI confidential Only for AhvzR

CONVERTER OPERATION

Device Operation

The digital operation of the AD71124 is shown in Figure 19.

After power-up or a reset cycle, the configuration registers of the AD71124 can then be programmed via the synchronous serial peripheral interface, SPI. The AD71124 has a power-on reset feature that puts the device in a known reset state, power-down mode. The SPI port consists of the CMOS signals CS (Pin LD25), SCK (Pin LD26), SDI (Pin LD28), and SDO (Pin LD27). After the AD71124 is configured, it is ready for integration sampling, conversion operation, and data reading. These functions are controlled by the synchronous, self clocked serial interface that consists of the LVDS signals; the DCLKx inputs (Pin LD39 and Pin LD40); the DOUTAx and DOUTBx outputs (Pin LD33 and Pin LD34, and Pin LD30 and Pin LD31, respectively); and the CMOS signals SYNC (Pin LD24) and ACLK (Pin LD23).

ANALOG FRONT-END (AFE) OPERATION

The AFE of the AD71124 consists of a low noise amplifier in an integrator configuration, followed by an RC LPF and a CDS block, as shown in Figure 18. The feedback capacitor of the integrator, which sets the full-scale range, is variable from 0.125 pF to 8 pF.

The feedback capacitor is controlled by the IFS bits (Bits[5:0] of Configuration Register 0). The time constant of the LPF is also variable: from 1.3 µs to 31.2 µs. This value is controlled by the LPF bits (Bits[9:7] of Configuration Register 1).

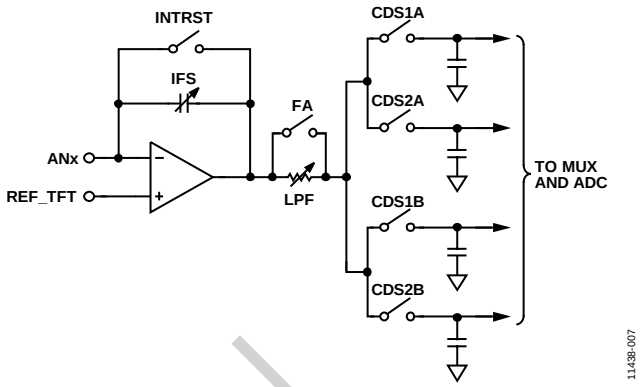

Figure 18. Simplified AFE Diagram

Several switches in the AFE open and close as defined by the user. The INTRST switch resets the integrator to REF_TFT or the optional REF_INT. The FA switch shorts the resistor of the LPF for filter acceleration. The CDS switches connect the CDS capacitors to sample the output voltage of the integrator. The CDS1 capacitors sample the reset level of the integrator. The CDS2 capacitors sample the output voltage of the integrator. The difference of these two voltages calculates the charge sampled by the integrator. The CDS stage has the added benefit of removing integrator offset, reset noise, and low frequency (1/f) noise.

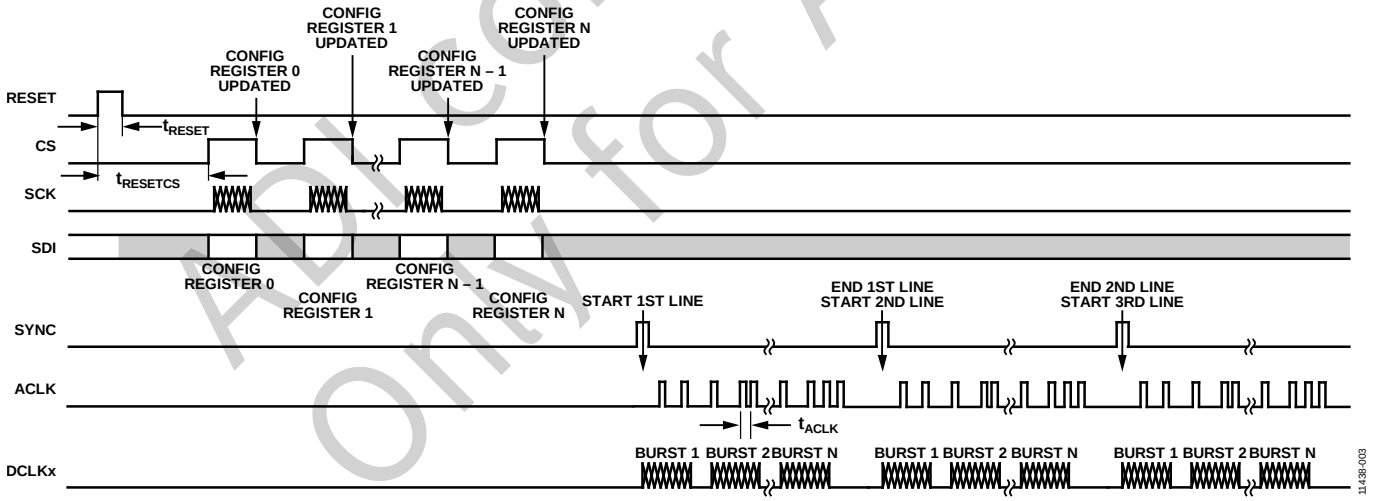

Figure 19. General Timing Diagram

ADI confidential
Only for Abyzr

Figure 20 shows the typical order of events in the sampling of a given line of a TFT panel. First, the integrator is reset to clear any charge from the previous line. Next, the reset level of the integrator is sampled onto the CDS1 capacitor. After this CDS1 activity, the charge is transferred from the TFT panel to the AFE by enabling the gates for a particular line on the panel. The output voltage of the integrator changes as a function of the charge transfer, and then this voltage is sampled onto the CDS2 capacitor. Finally, the ADC is ready to digitize the voltages stored on the CDS capacitors.

Figure 18 also shows the A and B pairs of the CDS capacitors. These two sets of capacitors are used in pipeline mode operation of the AD71124 (see the Conversion Modes section for an explanation of pipeline mode). After a reset, the first line-sampling interval begins with the CDSxA capacitors. The CDSxB capacitors are used for the next line sampling interval. Bit 48 in the output data header indicates the set of CDS capacitors used in the trailing data (see Table 11). In addition, writing the hexadecimal value of 0xFFFF to the SPI port ensures that the CDSxA capacitors are used in the next line being sampled.

Filter acceleration is useful if there are disturbances on the integrator or panel during the sampling process. By shorting the LPF resistor with the FA switch, the CDS capacitor can settle more quickly to the output voltage of the integrator. The user can then open the FA switch so that the RC network can filter noise from the front end.

AFE Sequencer Timing

To control the order of the AFE sequencer timing events in the AD71124, the user must provide an ACLK signal and program a set of configuration registers, as shown in Table 5. The values in these configuration registers determine when switch activity occurs with respect to the various edges of an ACLK signal.

Table 5. AFE Configuration Register

Switch	Configuration Register Address	Bits[7:4]	Bits[3:0]
INTRST	4	Close	Open
CDS1	5	Close	Open
CDS2	6	Close	Open
FA	7	CDS1 open	CDS2 open

ACLK is a pulsed, discontinuous clock from which all the AFE timing is derived. The user defines the placement of clocks in the ACLK pattern, allowing for accurate placement of switch activity in the AFE.

Four user configuration registers program when switch activity (opening and closing) occurs with respect to the ACLK. The values programmed into the registers correspond to the rising edge of ACLK on which that activity occurs. There can be any number of ACLKs in a line, but only 13 of them can correspond to switch activity in the AFE. Therefore, Bits[7:4] and Bits[3:0] of these configuration registers can have values from 0x0 to 0xD to correspond with one of these 13 ACLKs.

It is recommended that the CDS2 capacitors be clear of charge from the previous line. With CDS2_RESETEN high (Bit 5 of Configuration Register 1), the CDS2x switch closes when both INTRST and CDS1x are closed. This resets the CDS2 capacitors (see Figure 21).

There may be instances (for example, during system debug) when the user may want to have these switches always open or always closed. To set INTRST, CDS1x, or CDS2x as always closed, set Bits[3:0] of their respective configuration register to 0xF. To keep these switches open, set Bits[3:0] to 0xE. If the 0xF or 0xE setting is used, Bits[7:4] are ignored.

The FA switch is unique in that it corresponds to a particular CDS stage. The closing of FA occurs automatically with the closing of CDS1x or CDS2x. The opening of FA is controlled by Bits[7:4] after CDS1x closes, and by Bits[3:0] after CDS2x closes. Setting Bits[3:0] or Bits[7:4] to 0xF forces FA closed for the respective CDS stage. Likewise, setting these bits to 0xE keeps FA open for the respective CDS stage.

There are some timing recommendations for the AFE. If pipeline mode is selected, it is recommended that the first ACLK after a SYNC (ACLK0 in Figure 22) not close the CDS1x switch. Instead, use the second ACLK after the SYNC (ACLK1 in Figure 22), which can occur one ACLK period after the first ACLK (see Figure 22). It is recommended that the CDS time for CDS1x and CDS2x be equal to or greater than 5× the LPF time constant, which is set by the LPF bits, Bits[9:7] of Configuration Register 1. See Table 6 for a list of recommended integrator reset times. The integrator reset time for functional sleep mode is approximately five times longer than the times listed for Low Power 2 mode.

Table 6. Integrator Reset Times (t_{INTRST}) for Various Panel Capacitances, No External Reset Voltage

	Normal Mode		Low Power 1 Mode		Low Power 2 Mode	
Panel Capacitance (pF)	$C_F \le 2$ pF (µs)	$C_F > 2$ pF (µs)	$C_F \le 2$ pF (µs)	$C_F > 2$ pF (µs)	$C_F \le 2$ pF (µs)	$C_F > 2$ pF (µs)
0	2.0	4	3.2	6.0	6.0	12.0
70	2.0	4	3.2	6.0	6.0	12.0
80	2.7	5	3.2	7.5	6.0	15.0
90	3.0	5.4	3.8	8.1	6.2	16.2
100	4.2	5.9	5.2	8.9	6.6	17.7
120	6.0	7.4	8.0	11.1	10.0	22.2
150	7.8	10.0	10.8	15.0	16.0	30.0
200	12.2	16.0	16.2	24.0	43.2	64.0

ADI Confidential Only for AD7124

PIPELINE = 0
CDS2_RESETEN = 0

SWITCH	BITS[7:4]	BITS[3:0]
INTRST	7	1
CDS1	0	3
CDS2	4	6
FA	2	5

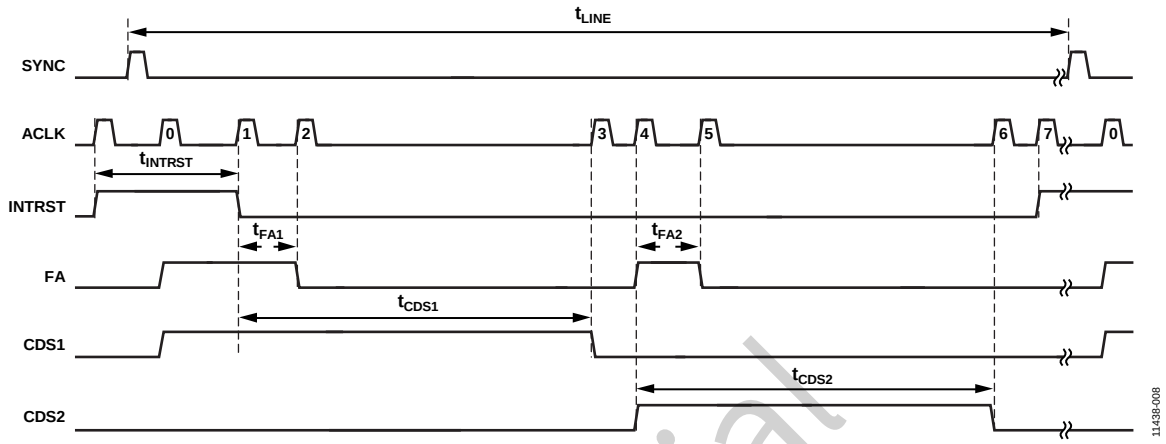

Figure 20. AFE Timing Example

PIPELINE = 0
CDS2_RESETEN = 1

SWITCH	BITS[7:4]	BITS[3:0]
INTRST	7	1
CDS1	0	3
CDS2	4	6
FA	2	5

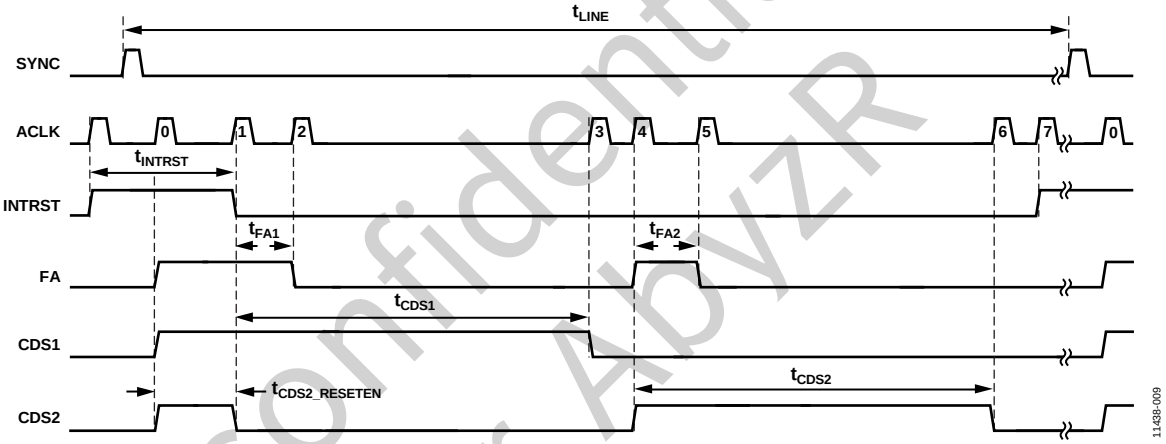

Figure 21. AFE Timing Example with CDS2 Reset Enabled

PIPELINE = 1
CDS2_RESETEN = 1

SWITCH	BITS[7:4]	BITS[3:0]
INTRST	8	2
CDS1	1	4
CDS2	5	7
FA	3	6

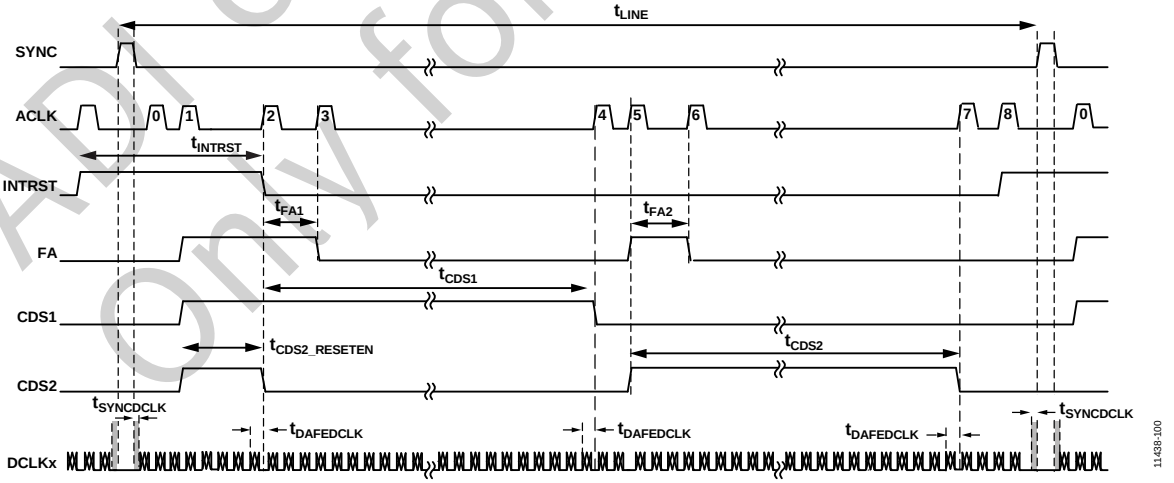

Figure 22. AFE Timing Example with Pipeline Mode Enabled

ADI confidential Only for AbyzR

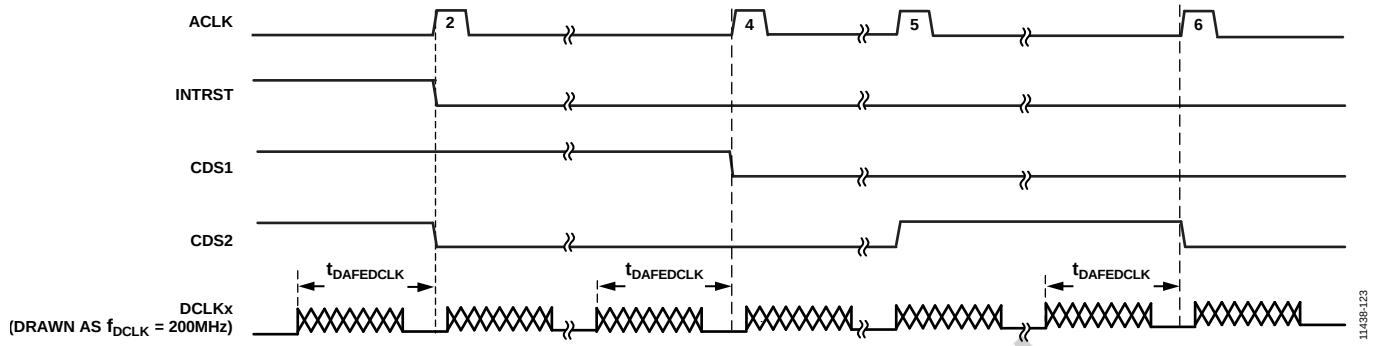

Figure 23. Detailed ACLK/DCLK timing with Pipeline Mode Enabled

Conversion Operation

The AD71115 conversion process and conversion data interface are controlled by three signals: ACLK, DCLKx (DCLKx in this data sheet refers to DCLKH and DCLKL), and SYNC.

The AFE sequencer clock, ACLK, is a pulsed discontinuous CMOS clock. ACLK times a state machine, which controls the timing of the AFE. Each edge of ACLK is placed to correspond with specific activity in the sampling process of the AFE. The number of ACLKs in a given line time is defined by the user requirements for AFE activity (see the Analog Front-End (AFE) Operation section).

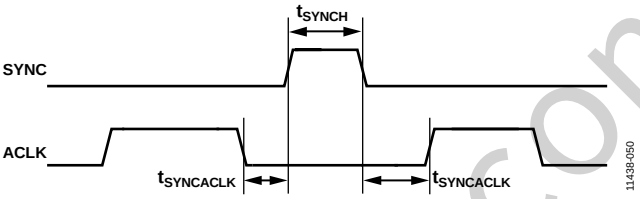

Figure 24. Detailed SYNC to ACLK Timing

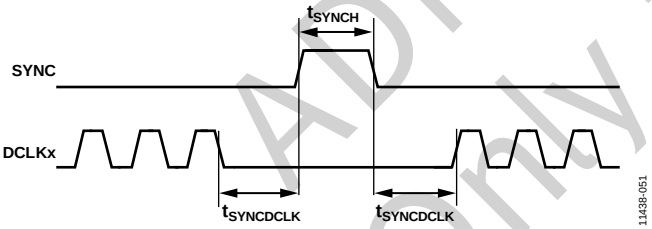

Figure 25. Detailed SYNC to DCLKx Timing

The data conversion clock, DCLKx, is a pulsed LVDS clock. The use of an LVDS clock minimizes the amount of wiring, reduces the synchronization challenge between multiple AD71124 devices and the digital host (FPGA), and helps reduce digital coupling to the analog inputs. DCLKx controls mux and ADC internal timing, as well as data output timing.

Both ACLK and DCLKx can be generated from the same master clock of an FPGA, which, in turn, is usually generated from a crystal oscillator. The typical period of ACLK, t_{ACLK}, is 20 ns; the typical period of DCLKx, t_{DCLK}, is 5 ns.

Unlike ACLK, DCLKx consists of a number of bursts within a conversion cycle. The total number of bursts depends on various data output modes, as described in the Data Interface section. Each burst contains 64 active clocks and a variable number of muted clocks (see Figure 26).

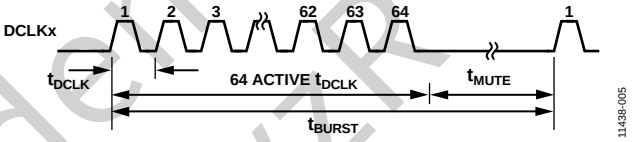

Figure 26. DCLKx Burst Diagram

The minimum burst length is 645 ns when DCLKx is 200 MHz. This translates to a minimum mute time of 325 ns. For slower DCLKx frequencies, the user must not have a mute time of less than 50 ns. The following equation defines the minimum required mute time for a given DCLKx period.

$$t_{MUTE}\ (\text{ns}) = Max((645 - (64 \times t_{DCLK})), 50)$$

Conversion Modes

The AD71124 provides modes that let the user determine when the conversion process takes place with respect to AFE sampling. These modes are controlled by the pipeline bit (Bit 0 of Configuration Register 2). When pipeline mode is selected by setting Bit 0 high, AFE sampling and the data conversion processes occur in parallel. When serial mode is selected by setting Bit 0 low, these two processes occur serially. The data conversion and data output processes always occur simultaneously; there is always a pipeline delay of 1 between them. Figure 27 shows the order of operation.

The use of pipeline or serial mode depends on the desired line time. In pipeline mode, the minimum line time is determined by whichever is longer: the AFE sampling time/ACLK activity (t_{AFE}) or the digital conversion time (t_{DCONV}). In serial mode, the minimum line time is the sum of t_{AFE} and t_{DCONV}. For details on AFE timing, see the AFE Sequencer Timing section. For digital conversion/data output timing, see the Data Interface section.

When in pipeline mode, avoid having the ACLK that corresponds with CDS1 opening and CDS2 opening near DCLKx activity. See Figure 22 and Figure 23 for a detailed timing example of pipeline mode.

ADI confidential only for AbyzR

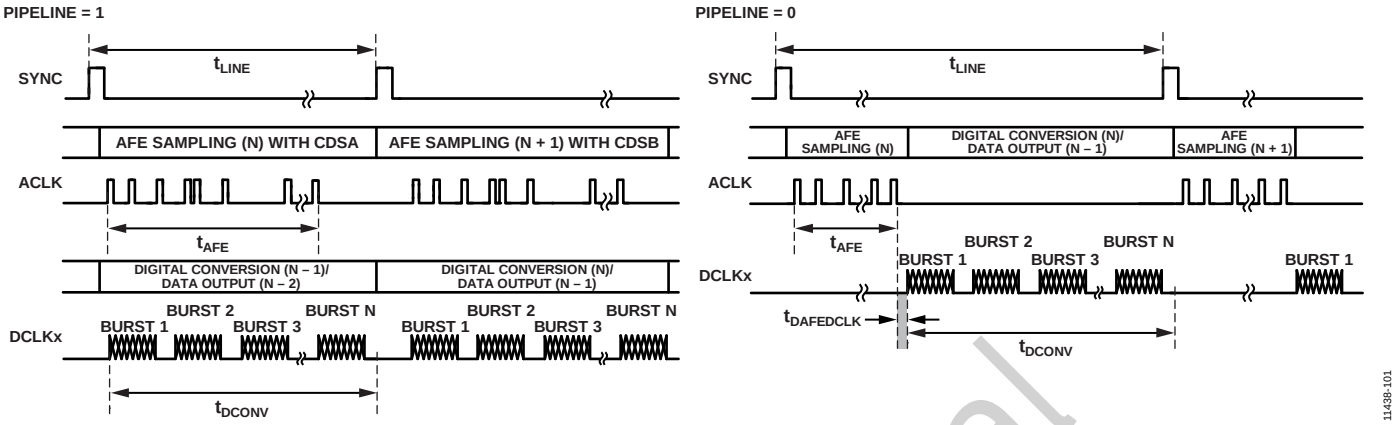

Figure 27. Comparison of Pipeline Mode and Serial Mode

Transfer Function

The channel charge results are output in 16-bit format in straight binary code, MSB first.

The LSB size of the charge in aC (attocoulomb, 10^{-18} C) is defined as

$$LSB_{CHARGE} = 0.125\ (\text{pF}) \times (IFS + 1) \times 61.035\ (\mu\text{V})$$

where:
0.125 (pF) is the nominal feedback capacitance of the integrator.
IFS is the 6-bit Configuration Register 0 parameter that defines the full-scale range as set by the user.
61.035 (µV) is the LSB size of the ADC.

For example, for IFS = 20, LSB_{CHARGE} = 0.16 fC.

The charge is calculated by the following:

$$Charge = (Data\ Out) \times LSB_{CHARGE}$$

where:
Data Out is the AD71124 channel output.
LSB_{CHARGE} is the LSB size previously calculated.

The full-scale charge range, FSR_Q, is

$$FSR_Q = 65{,}536 \times LSB_{CHARGE}$$

where:
65,536 is the maximum number of LSBs.

The 16-bit temperature result (TEMP) is output on Bits[31:16] of the header (see Table 11). This temperature result can monitor the change in temperature, but it is not recommended for use in measuring the absolute temperature. At 0°C, the nominal code is decimal 4380. The output typically changes at a rate of 17 LSB/°C. For example, if the temperature is 50°C, the TEMP result is approximately 5230.

The VT (voltage test input) result is output on Bits[15:0] of the header (see Table 11). The weight of a VT LSB is 61.035 µV. The VT result is relative 0.5 V. For example, if VT = 1.0 V, the result is decimal 8192.

$$VTRESULT = (VT - 0.5)/61.035\ \mu\text{V}$$

Noise Considerations

The AD71124 provides four operational power modes, a sleep mode, and a power-down mode. The four operational power modes control the current consumption and noise level in the integrator, allowing the user to make the trade-off between power and noise (see Table 7). The various power modes are selected via the PWR bits (Bits[8:6] of Configuration Register 0).

There is also a timing factor to consider. A 16-bit ADC requires 11 time constants for the signal to completely settle on the input. In the case of the AD71124, the integrated low-pass filter determines the time constant. Complete settling of the ADC results in better noise performance.

Table 7. Noise for Various Power Modes

Mode	LPF Time Constant (µs)	Typical Noise, C_{SOURCE} = 50 pF (e^- rms)[1]	Typical Noise, C_{SOURCE} = 100 pF (e^- rms)[1]	Typical Total Power (mW)
Normal Mode	1.3	770	1130	770
	7.8	570	820	
Low Power 1 Mode	1.3	960	1510	465
	7.8	650	1010	
Low Power 2 Mode	1.3	885	1255	363
	7.8	660	1020	
Functional Sleep Mode	1.3	925	1235	260
	7.8	805	1195	

[1] The typical noise is measured using C_F = 0.5 pF, T_J = 50°C. CDS times are 11 × τ_{LPF} for full 16-bit settling.

The AD71124 includes a feature that can lower back-end noise, which is created by the CDS, the ADC buffer amplifier, and the ADC. For certain full-scale settings, this feature reduces total random noise. ADCAVG (Bit 1 of Configuration Register 1) and PIPELINE_AVGEN (Bit 0 of Configuration Register 10) enable this feature. In ADC averaging mode, the internal ADC averages the result of four consecutive ADC conversions, reducing noise.

ADI confidential Only for AbyzR

This increase in ADC conversion requires more DCLKx bursts. A total of 130 bursts is required. There are 128 bursts for the integrators, one burst for VT and temperature, and one burst for the common-mode channel. The shortest possible line time in ADC averaging mode is 84 µs.

Table 8. ADC Averaging Back-End Noise

ADCAVG	PIPELINE_AVGEN	Back-End Noise (µV rms)
Low	Low	109
High	High	82

Power Optimization (Sleep Mode and Power-Down Modes)

The sleep mode and power-down modes of the AD71124 allow power savings without completely powering down the panel. Both sleep mode and the power-down modes disable the back-end circuitry (mux, ADC, and digital processing). Sleep mode puts the integrator in a low power state, whereas the power-down modes completely disable the integrator.

The INTRST switch has a special relationship to sleep mode and the power-down modes, as shown in Table 9.

Table 9. Analog Inputs in Sleep/Power-Down Modes

Mode	PDTFTEN Bit[1]	INTRST Switch	Analog Inputs
Sleep	X	Closed	REF_TFT
	X	Open	Floating
Power-Down	Low	Closed	AVSSI
	High	Closed	REF_TFT
	X	Open	Floating

[1] X means don't care.

Sleep mode keeps the integrator functional so the voltage that is present on the panel, REF_TFT, is maintained. The fast switching time into and out of sleep mode, 100 µs, allows the user to conserve power in long frame rate applications where the AD71124 can toggle between sleep mode and one of the four higher power modes.

If INTRST is closed in sleep mode, the inputs are maintained to REF_TFT. If INTRST is closed in power-down mode, the inputs are shorted to AVSSI, the bottom rail of the integrator.

If INTRST is open in power-down mode, the inputs float. If the PDTFTEN bit (Bit 8, Configuration Register 2) is high and INTRST is closed, the inputs are maintained to REF_TFT in power-down mode. This is the lowest power configuration for which the panel bias can be maintained.

The total power consumption can be further optimized with the REFDACDIS bit (Bit 7 of Configuration Register 2). When set high, REFDACDIS disables the on-board reference DAC, which is output on REF_OUT. Disabling the on-board DAC results in a 5 mW power savings. In a system configuration using multiple AD71124 devices, the REF_OUT of one chip can be kept enabled and connected to the REF_OUT of all the other chips in the system. A similar scheme can be used when PDTFTEN is high in power-down mode.

The AD71124 also offers a functional sleep mode that powers up the back-end circuitry while keeping the integrator in a low power state. With sleep mode selected, functional sleep mode can be enabled by setting the FUNCSLEEP bit (Bit 8 of Configuration Register 12) high. Although power is greatly reduced in this mode, the device is still capable of measuring charge. However, noise is greatly increased.

Table 10. System Power Configurations for Ten AD71124 Devices

Mode	Bit Configuration[1]				AD71124 Power (mW)	Total Power for Ten AD71124 Devices (W)	Test Conditions/Comments
	PWR[2:0]	FUNCSLEEP	REFDACDIS	PDTFTEN			
Power-Down	101	X	X		1.2	0.012	Device is powered down except for the SPI digital interface.
Power-Down with Panel Bias	101	X	0	1	21	0.21	Panel bias is maintained; REF_OUT is valid, with INTRST closed.
Power-Down with Panel Bias Optimized	101	X	1	1	16	0.165	REF_OUT of one AD71124 is connected to the REF_TFT and REF_INT pins of all AD71124 devices. There may be offsets among REF_TFT and REF_INT of the various AD71124 devices.
Sleep Optimized	100	0	1	X	56	0.565	Similar to power-down with panel bias optimized.
Sleep	100	0	0	X	61	0.61	Panel bias is maintained, and REF_OUT is valid.
Functional Sleep	100	1	0	X	260	2.60	Device is fully functional.
Low Power 2	000	X	X	X	363	3.63	
Low Power 1	001	X	X	X	465	4.65	
Normal	010	X	X	X	770	7.70	

[1] X means don't care.

ADI confidential Only for AbyzR

Power Supply Restrictions and Sequencing

There are some power supply restrictions to note on the AD71124. Some of these restrictions pertain to device operation, and some pertain to device power-up. All of the supplies in question are tied to the integrator of the AFE.

There are several voltages tied to the AFE that require special consideration during power-up. AVDDI is the top rail of the integrator input stage, and AVSSI serves as the bottom rail of the integrator input stage. AVDD5F serves as the top rail of the integrator output stage, and AVDD5Q serves as the quiet supply for the integrator. AGND5F and AGND5Q serve as the returns for these supplies. REF_TFT is the input voltage of the positive terminal of the integrator.

The critical relationship among all these voltages is shown in the following list. Note that these voltages differ from the operational conditions, shown in Figure 28 and Table 1.

- 0 ≤ AVDDI − AVSSI ≤ 2.7 V
- |AVDDI − REF_TFT| ≤ 2.7 V
- |AVSSI − REF_TFT| ≤ 2.7 V
- AVDD5F − AVSSI ≥ 0.0 V
- AVDD5Q − AVSSI ≥ 0.0 V

REF_TFT and REF_INT can be supplied by REF_OUT via the internal DAC, as shown in Figure 16. REF_OUT starts up at 2.5 V after all of the following voltages are applied: REF_ADC, AVDD2, AVDD5B, DVDD5, and DVDD2.

The user must ensure that all of these voltages come up before AVSSI. Figure 29 shows an example in which REF_OUT supplies both REF_INT and REF_TFT. Note that, if AVSSI is at GND, there is no risk of supply sequencing issues. If REF_TFT is supplied externally, REF_TFT can be applied after REF_INT is set to the final value. In this case, AVDDI and AVSSI can be applied at the same time as REF_TFT.

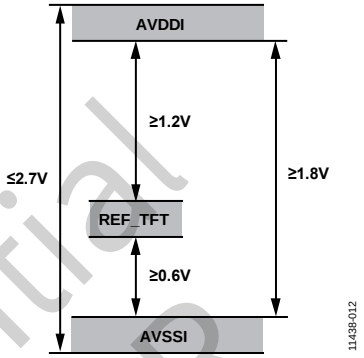

Figure 28. Operational AFE Supply Constraints

Figure 28 illustrates the relationship that must be maintained between AVDDI, AVSSI, and REF_TFT during operation. The difference between AVDDI and AVSSI must be between 2.7 V and 1.8 V. In operation, REF_TFT must be at least 1.2 V below AVDDI and at least 0.6 V above AVSSI.

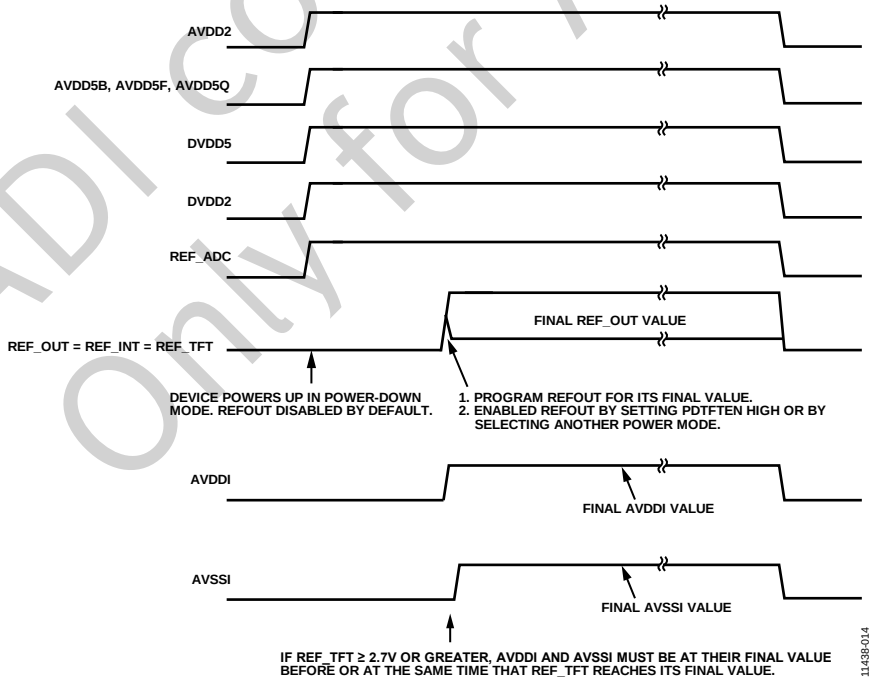

Figure 29. Power Sequencing Example; REF_TFT = REF_INT = REF_OUT

ADI confidential Only for ADVZR

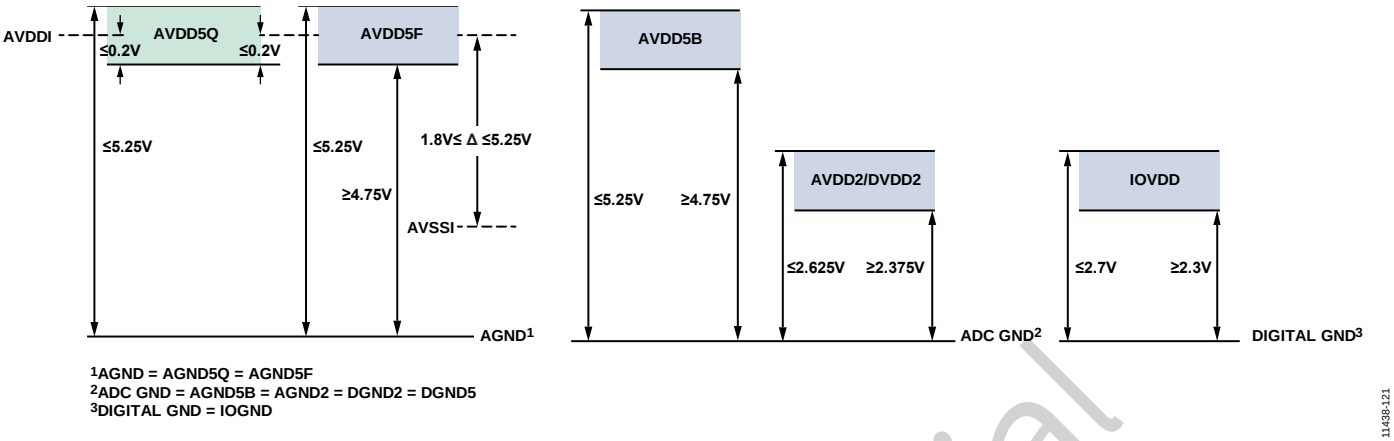

Figure 30. Supply Voltage Ranges

Reference Considerations

The AFE of the AD71124 can be configured in various ways to meet the needs of the user. The AFE provides two user-definable analog inputs. The first is REF_TFT, the integrator positive input voltage, which can be set to match the common-mode level of the user panel. The second is REF_INT, the integrator reset voltage, which can be set to partition the full-scale range of the integrator. REF_TFT can be any voltage from 0.6 V to 2.7 V and is typically defined by the panel requirements of the user. This is a very sensitive node that requires good decoupling. REF_INT can be any voltage from 0.5 V to 4.5 V.

Each integrator has a linear output range from 0.5 V to 4.5 V. Setting the REF_INT voltage within this span allows the user to partition the available range for positive and negative signals.

For example, in a holes integrating application, setting REF_INT to 4 V gives 87.5% of the available range for positive signals and 12.5% of the span for negative signals. Similarly, in an electron integrating application, setting REF_INT to 1 V partitions the span in the same way. Figure 31 illustrates this relationship.

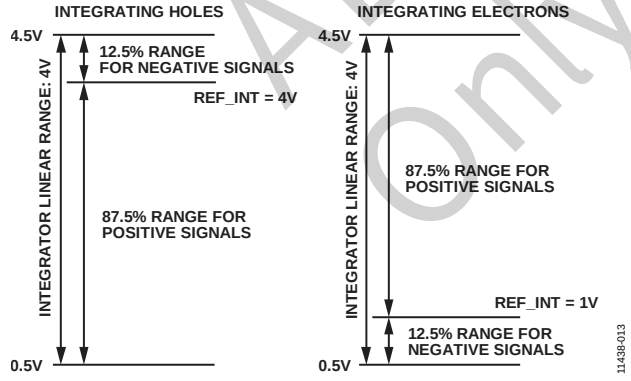

Figure 31. Integrator Linear Operating Range

REF_TFT = REF_INT = REF_OUT Configuration

There are three possible configurations for driving REF_TFT and REF_INT. The first and recommended configuration is to use the internal DAC to supply REF_TFT and REF_INT (see Figure 32). The internal reference DAC, which is output on REF_OUT, is programmed by the REFDAC bits (Bits[7:0] of Configuration Register 3). The span of the DAC is from 0.5 V to 4.5 V, with an LSB size of 15.625 mV. Code 0 corresponds to 0.5 V, and Code 255 corresponds to 4.5 V. Note that REF_TFT must be in the range of 0.6 V to 2.7 V. Figure 32 illustrates this configuration, allowing the AD71124 to easily track these critical voltages.

REF_TFT = External Source; REF_INT = REF_OUT

The second configuration allows the user to provide an external REF_TFT voltage of between 0.6 V and 2.7 V, and to connect REF_INT to REF_OUT (see Figure 33). This option is useful if the user does not wish to connect REF_TFT to the same potential as REF_INT. For example, if the user' panel integrates electrons and requires a 2.5 V REF_TFT, it may be desirable to have REF_INT at a lower voltage to maximize the available positive range. In this configuration, where REF_OUT is not driving REF_TFT, the user must set EXTRST (Bit 2 of Configuration Register 1) high.

REF_TFT = External Source; REF_INT = External Source

The third and least common configuration is to have the user provide both REF_TFT and REF_INT (see Figure 34). If the user supplies an external integrator reset voltage on REF_INT, the internal DAC must also be set to a value that closely matches the voltage on REF_INT. This is necessary for the AD71124 to properly calculate the CDS differentiation. If the external REF_INT voltage is 4 V, set the REFDAC bits (Bits[7:0] of Configuration Register 3) equal to Code 224 (0xE0). In this configuration, where REF_OUT is not driving REF_TFT, the user must set the EXTRST bit (Bit 2 of Configuration Register 1) high. Note that any discrepancy between an external REF_INT voltage and the REF_OUT voltage appears as an offset.

ADI Confidential Only for ABYR

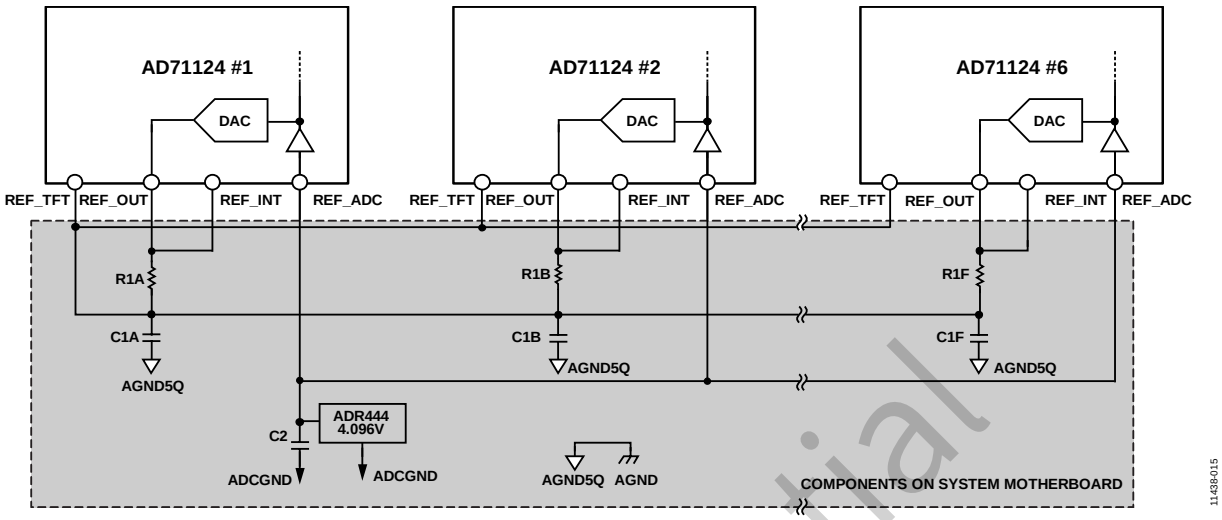

Figure 32. Reference Connection Diagram, REF_TFT = REF_INT = REF_OUT

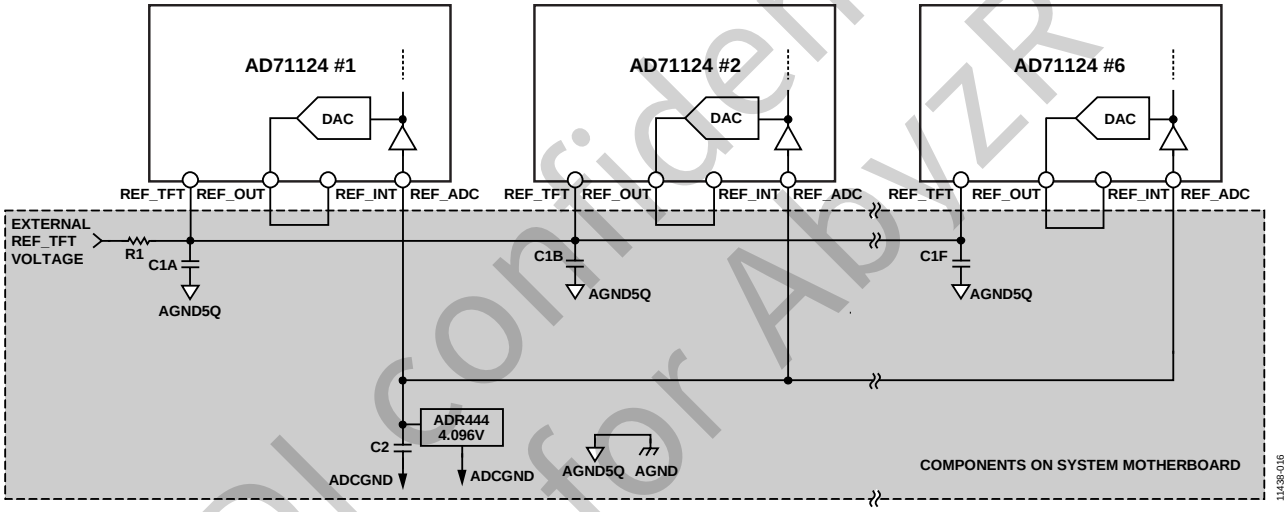

Figure 33. Reference Connection Diagram; REF_TFT = External Source, REF_INT = REF_OUT

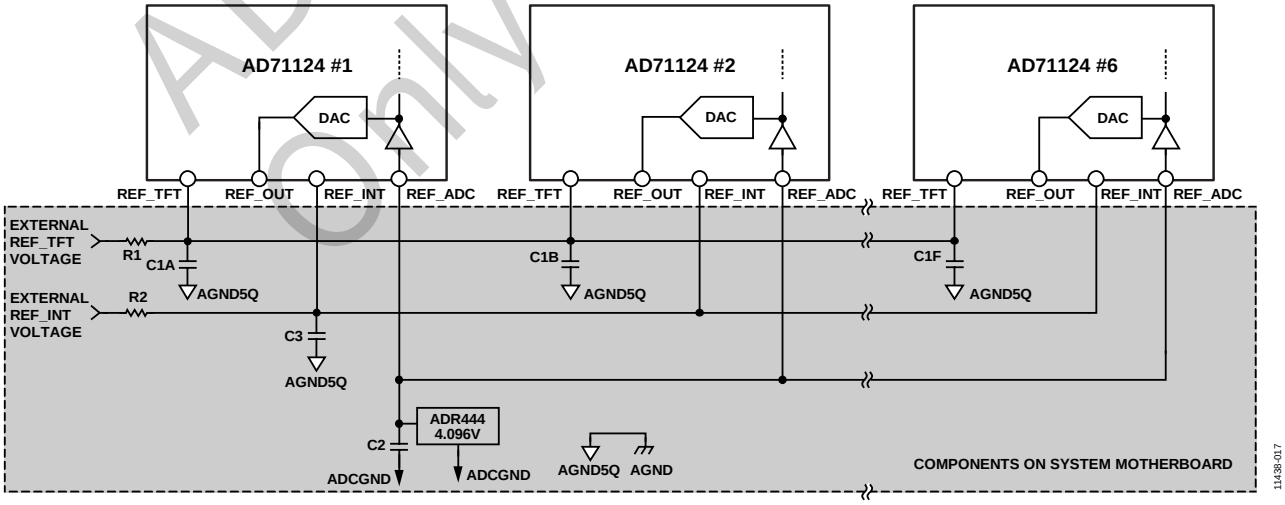

Figure 34. Reference Connection Diagram; REF_TFT = External Source, REF_INT = External Source

ADI confidential
Only for AbyzR

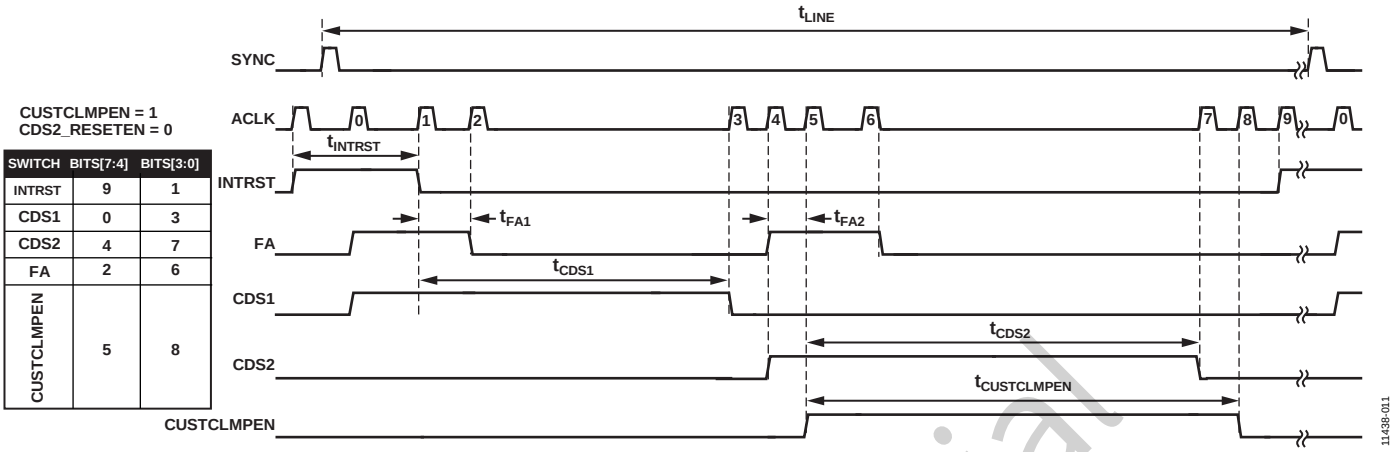

Figure 35. AFE Timing with Customized Integrator Clamping

Integrator Clamping

The AD71124 has an integrator clamp function that acts as an antiblooming mechanism. The integrator clamp detects when the output of the integrator is approaching saturation and, if necessary, removes the excess charge at the input of the integrator. The INTCLAMP bit (Bit 3 of Configuration Register 2) enables the integrator clamp functionality. The clamp is active from the falling edge of INTRST to the falling edge of CDS2x. However, there is an option to customize the timing of this clamp using the AFE timing sequencer. This customizable clamp timing allows the user to create a window for use when the integrator clamp is active. This can be especially useful if the user wishes to avoid a false clamping due to a large gate charge injection.

The customizable clamp timing is enabled by the CUSTCLMPEN bit (Bit 8 of Configuration Register 8). The edges of the time window are programmed in the same manner as other AFE timing. The CUSTCLMP_C bits (Bits[7:4] of Configuration Register 8) define the rising edge of the window, and the CUSTCLMP_O bits (Bits[3:0] of Configuration Register 8) define the falling edge of the window. The value of these bits corresponds to a particular ACLK. Note that the falling edge of CUSTCLMPEN must be after the falling edge of CDS2. Figure 35 shows an example using the customized integrator clamp timing.

The exact timing of this customizable integrator clamp depends on the user AFE timing, the fault conditions the user wishes to detect, and the TFT panel characteristics.

Data Interface

The data interface of the AD71124 consists of two LVDS pairs: DOUTAx/DOUTBx and DCLKx/DCLKOx. The data lines (DOUTAx and DOUTBx) and the master clock (DCLKx) serve as the synchronous serial interface that outputs the digital conversion results.

DCLKOx is an echo version of DCLKx that can ease data synchronization to the master clock. The data interface is highly customizable through various configuration register bits.

The DOUTMODE bit (Bit 2 of Configuration Register 2) allows the user to select between one of two data modes. In single data rate mode, when the DOUTMODE bit is low, the data is output on DOUTAx. In double data rate mode, when the DOUTMODE bit is high, the data is output on both DOUTAx (even channels) and DOUTBx (odd channels).

In general, following 34 DCLKx bursts, the user can begin to continuously clock DCLKx. This continuous clocking allows the user quicker access to data, independent of the line time. Furthermore, it defines the minimum line time that is achievable in pipeline mode: 32 µs in single data rate mode and 22 µs in double data rate mode. Note that, if a line time of 32 µs is achieved in single data rate mode, there are insufficient DCLKxs to read out the configuration registers.

The READDOWN bit (Bit 3 of Configuration Register 1) controls the order in which data is output. When READDOWN is high, data starting with Channel 255 is output. Conversely, when READDOWN is low, data starting with Channel 0 is output. In either case, the results on DOUTx are always output MSB first.

Regardless of data mode or data output direction, there are some constants to the data pattern. The first burst of DCLKx always outputs a 64-bit header, as described in Table 11. The 256-channel results are output following 4096 clocks. If desired, additional clocks can output the contents of the configuration registers. After 4288 clocks, when all relevant data has been output (the header, channel data, and configuration register bits), 0s are output. Bringing SYNC high also forces DOUTx to 0. If a SYNC pulse occurs before the minimum number of bursts, the output data, conversion process, and AFE timing are corrupted.

ADI confidential
Only for Abyzk

Table 11. Header Descriptions

Header Bits	Description
[63:56]	8-bit fixed pattern; hexadecimal value: 0x0A.
[55:51]	These five bits are all low.
50	This bit is for factory use only.
49	Readout direction. If high, channel data starts with Channel 255. If low, channel data starts with Channel 0.
48	CDS identification. Useful in pipeline mode, this bit is high if data was sampled with CDSxA. If this bit is low, the data was sampled with CDSxB. This information is useful when trying to synchronize data from different frames.
[47:32]	These 16 bits are all low.
[31:16]	16-bit temperature result.
[15:0]	16-bit VT result.

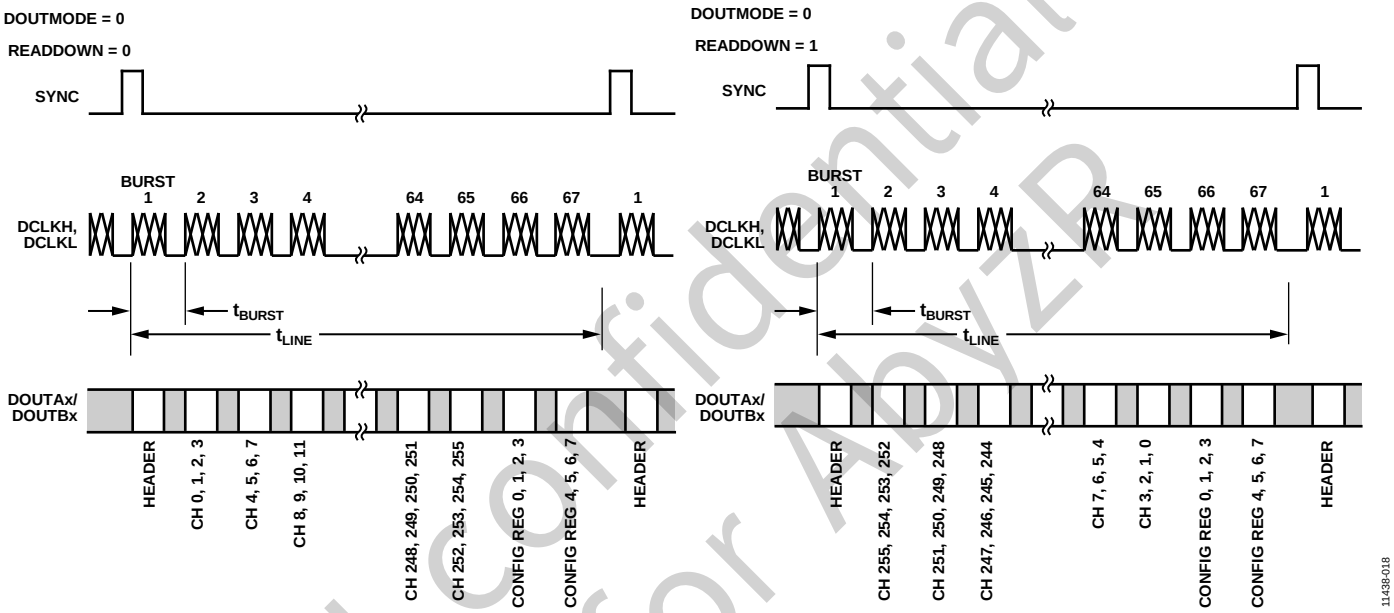

Figure 36. Data Output Format over a Single LVDS

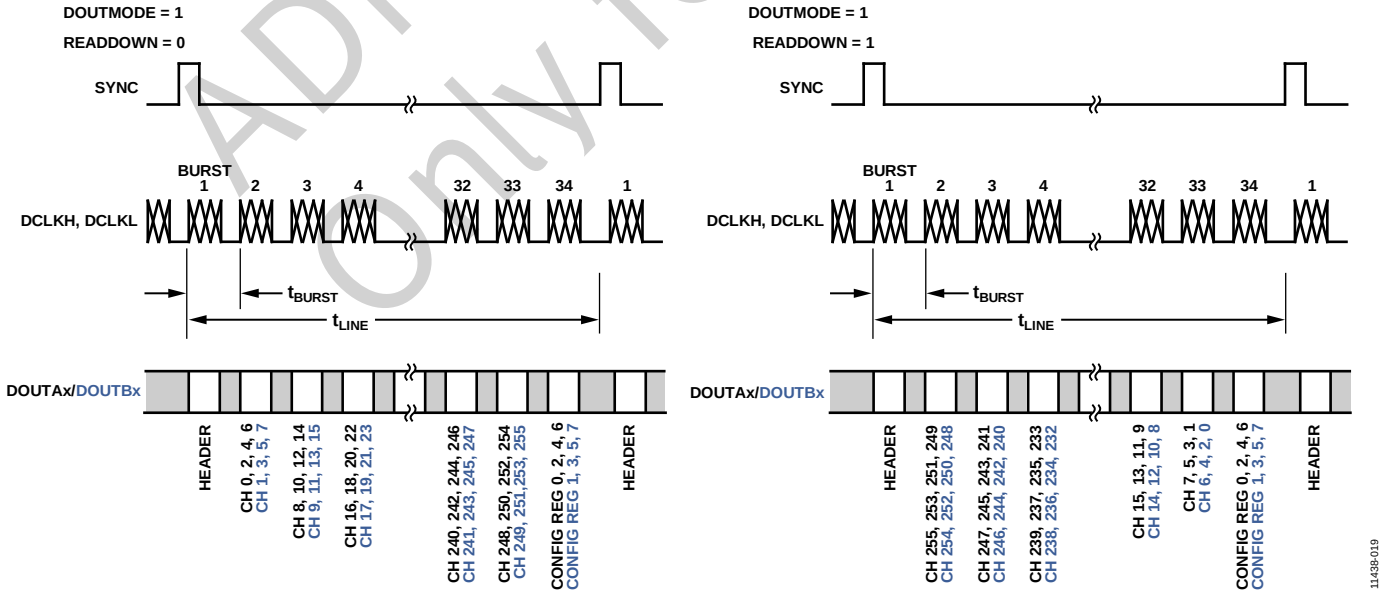

Figure 37. Data Output Format over a Dual LVDS, $t_{LINE} \leq 32$ µs

ADI confidential Only for AbyzR

Echo Clock Interface Mode

The AD71124 offers an echo clock mode that is enabled by the ECHOCLK bit (Bit 1 of Configuration Register 2). This interface mode simplifies the synchronization of the data and the master LVDS clock. By setting ECHOCLK high, DCLKOx is enabled.

DCLKOx is a buffered copy of DCLKx and is synchronous to the data, DOUTAx or DOUTBx, which is updated on the rising edge of DCLKOx (t_{DCO}), as shown in Figure 38. By maintaining good propagation delay matching between DOUTxH, DOUTxL, and DCLKOx through the board and the digital host, DCLKOx can latch the data, with good timing margin, into an FPGA.

Configuration Operation

The configuration of the AD71124 is defined by 16, 16-bit registers (Configuration Register 0 to Configuration Register 15). The functionality of each register bit is defined in Table 12. These registers are initialized to their reset value by a reset cycle (RESET is high).

The contents of the configuration registers are also output with the conversion data during each conversion cycle. This process can continuously monitor the integrity of the digital interface.

The configuration registers can be updated via the 4-wire, SPI-like, synchronous serial interface with daisy-chain capability consisting of CMOS signals (CS, SCK, SDI, and SDO), as shown in Figure 39 and Figure 40. When multiple AD71124 devices are used, their SPI interfaces must be daisy-chained together.

A single write cycle can update any number of configuration registers in a chain of multiple AD71124 devices. The daisy-chain feature uses the SDI input and SDO output for cascading multiple AD71124 devices on a single data line that is similar to a shift register. This feature is useful for reducing component count and wiring connections.

A daisy-chain connection diagram example using three AD71124 devices is shown in Figure 39, and the corresponding timing is shown in Figure 40.

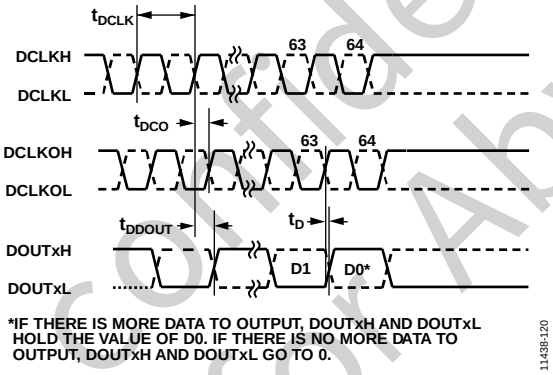

Figure 38. Detailed LVDS Timing Interface

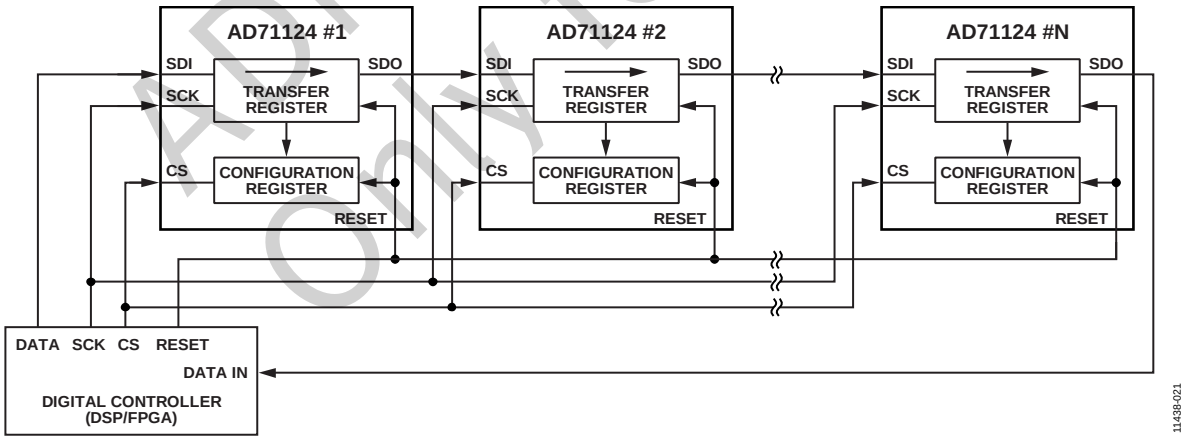

Figure 39. Daisy-Chain Configuration Connection Diagram

ADI Confidential Only for AbyzR

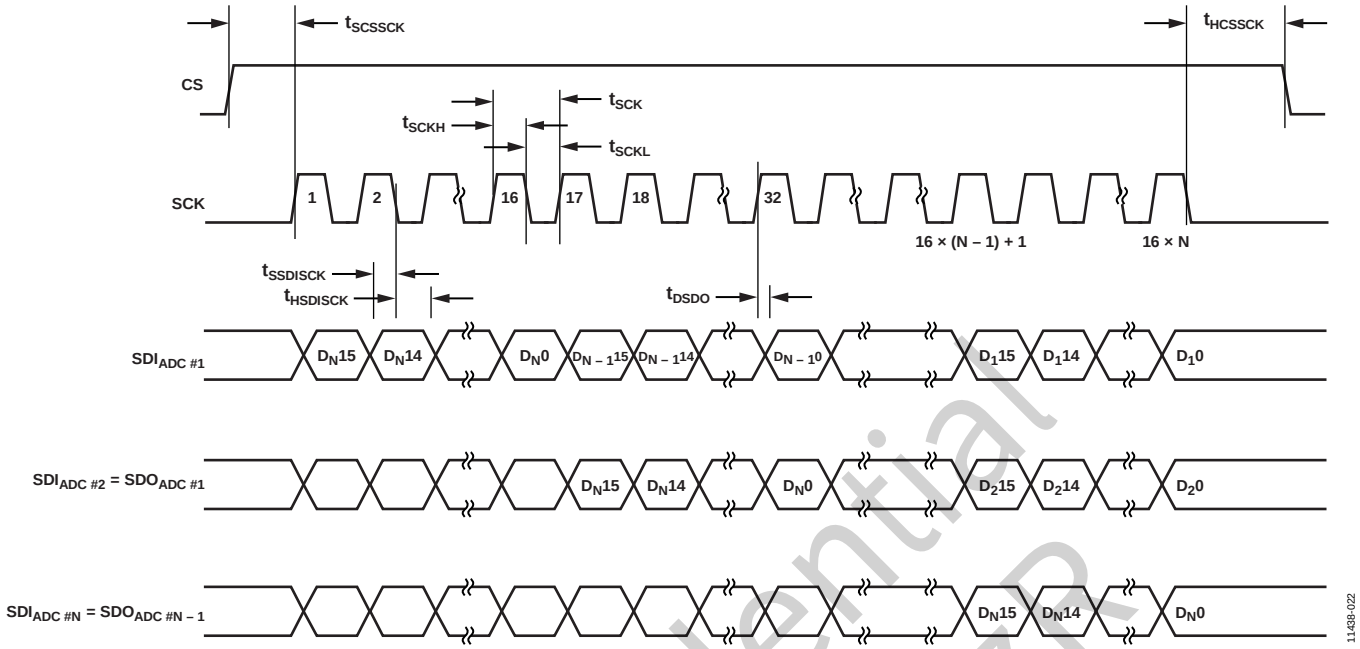

Figure 40. Daisy-Chain Configuration Timing Diagram

ADI confidential
Only for AbyzR

A write cycle into a configuration register is defined by a CS high pulse. The new value of the configuration register on the SDI input is shifted into an internal shift transfer register by the SCK clock, MSB first. SDI is sampled on the SCK falling edge. On the falling edge of CS, the configuration register is updated.

Also, during the write cycle, the data bits stored in the internal shift transfer register are clocked, MSB first, on the SDO output by the SCK rising edges.

During a write configuration operation, hold SYNC and DCLKx low.

During conversion, CS must be held low. SCK must also be held low, even though the SCK pulses are ignored.

To read configuration register contents from the SPI port, CS must be brought low for a minimum of two clocks after a read command has been issued and before the data can be read out of the SDO pin, as shown in Figure 41 (SCK 17 and SCK 18). The user can apply more than two clocks with CS low, if desired.

Digital Interface Integrity

The AD71124 has an internal linear feedback shift register, LFSR, that can verify the integrity of the digital interface. The values of the LFSR can be read on DOUTAx and DOUTBx in the same manner as conversion data (see Figure 36 and Figure 37).

Each unique configuration of the AD71124 has a specific LFSR pattern, which allows the user to have integrity checks for different configurations. The LFSR is enabled by setting the LFSR_EN bit (Bit 6 of Configuration Register 11) high. The values of the LFSR can be reset either by applying a reset to the AD71124 or by writing 0xFFFE to the SPI port.

A typical implementation of the LFSR follows:

1. Configure the AD71124 via the SPI port as desired.
2. Enable the LFSR by setting the LFSR_EN bit high.
3. Read N number of lines.
4. Store the line results in a lookup table.
5. Compare the lookup table values to the results from a known working setup.

The results stored in the lookup table can compare to other AD71124 devices. For a given configuration, each AD71124 yields the same values as those read in Step 3. If the user wishes to check the digital integrity on a single AD71124, a sixth step, which resets the LFSR, can be added. Then Step 1 to Step 4 are repeated. Remember to disable the LFSR by writing 0xAC00 to the SPI port.

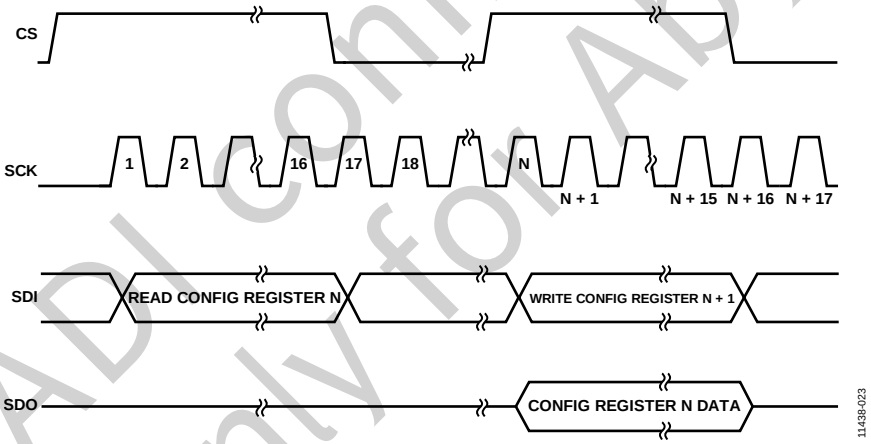

Figure 41. Reading a Configuration Register via SPI Port Timing

ADI confidential Only for Abyzr

CONFIGURATION REGISTERS

Table 12. Configuration Register Contents

Reg. No.	Bits	Bit Name	Description	Reset State	Readback Value
0	15 (MSB)	Write	1: writes the 15 bits that follow in Configuration Register 0 on the next CS falling edge. 0: ignores the 15 bits that follow. For the write operation to work, the read bit must be low.	0	0
	14	Read	1: the contents of Configuration Register 0 are output on SDO after the next rising edge of CS (see Figure 41). For the read operation to work, the write bit must be low.	0	0
	[13:10]	ADDR	Configuration register address bits. ADDR must be set to 0 for Configuration Register 0.	0	0
	9	Not used	This bit is for factory use only. Keep this bit low.	0	0
	[8:6]	PWR	Power mode. These bits allow the user to optimize the power of the integrator for the desired noise level. Functional sleep mode can be enabled by selecting sleep mode and then setting the FUNCSLEEP bit high (Bit 8 of Configuration Register 12). **PWR, Bits[2:0]** — **Power Mode** 0 — Low Power 2 mode 1 — Low Power 1 mode 2 — Normal mode 3 — Unused 4 — Sleep mode 5 — Power-down mode	5	PWR
	[5:0]	IFS	Integrator full-scale selection. These bits allow the user to select the appropriate full-scale range. The full-scale range is between 0.5 pC and 32 pC.	32	IFS
1	15 (MSB)	Write	1: writes the 15 bits that follow in Configuration Register 1 on the next CS falling edge. 0: ignores the 15 bits that follow. For the write operation to work, the read bit must be low.	0	0
	14	Read	1: the contents of Configuration Register 1 are output on SDO after the next rising edge of CS (see Figure 41). For the read operation to work, the write bit must be low.	0	0
	[13:10]	ADDR	Configuration register address bits. ADDR must be set to 1 for Configuration Register 1.	1	1
	[9:7]	LPF	Low-pass filter time constant. These bits allow the user to select the time constant of the low-pass filter at the output of the integrator. The time constant range is from 1.3 µs to 31.2 µs. With ADCAVG high, the time constant doubles. **LPF, Bits[9:7]** — **Time Constant (µs)** 0 — 1.3 1 — 3.9 2 — 7.8 3 — 11.7 4 — 15.6 5 — 19.5 6 — 23.4 7 — 31.2	0	LPF
	6	Not used	This bit is for factory use only. Keep this bit low.	0	0
	5	CDS2_RESETEN	CDS2 reset enable. 1: forces the CDS2 switch to close when the INTRST and CDS1 switches are both closed. Allows the CDS2 capacitors to reset to REF_TFT when EXTRST is low, or to the external integrator reset voltage (REF_INT) when EXTRST is high. 0: the CDS2 capacitors are not reset; they maintain the voltage from their previous sample.	0	CDS2_ RESETEN
	4	CMR_EN	Common-mode channel enable. 1: reduces common-mode errors from the AFE, such as power supply noise, temperature drift, or REF_TFT drift. The AD71124 contains eight additional integrators, identical to the other 256 integrators, except that their inputs are floating. The eight integrators are powered up, increasing AFE power by 1/32. During each line time, the result of these eight integrators is averaged together, and the measured error is then subtracted from the result of the other 256 integrators.	0	CMR_EN
	3	READDOWN	Readout direction. Determines the order of the data readout. 1: the data readout order is from Channel 255 to Channel 0. 0: the data readout order is from Channel 0 to Channel 255.	0	READ-DOWN
	2	EXTRST	External integrator reset. 1: sets REF_INT to an externally supplied reset voltage. 0: resets the integrator to the REF_TFT voltage.	0	EXTRST

ADI confidential only for AD/ZR

Reg. No.	Bits	Bit Name	Description	Reset State	Readback Value
	1	ADCAVG	ADC averaging. 1: when the PIPELINE_AVGEN bit is high (Bit 0 of Configuration Register 10), the results of four consecutive ADC conversions are averaged. Averaging reduces the back-end noise from 109 µV rms to 82 µV rms.	0	ADCAVG
	0	Holes	Holes/electrons integration. This bit allows the AD71124 to always output an equivalent result in charge. 1: integrating holes. 0: integrating electrons.	0	Holes
2	15 (MSB)	Write	1: writes the 15 bits that follow in Configuration Register 2 on the next CS falling edge. 0: ignores the 15 bits that follow. For the write operation to work, the read bit must be low.	0	0
	14	Read	1: the contents of Configuration Register 2 are output on SDO after the next rising edge of CS (see Figure 41). For the read operation to work, the write bit must be low.	0	0
	[13:10]	ADDR	Configuration register address bits. ADDR must be set to 2 for Configuration Register 2.	2	2
	9	Not used	These bits are for factory use only. Keep these bits low.	0	0
	8	PDTFTEN	Power-Down TFT enable. 1: keeps the input stage of the integrator biased to REF_TFT when in power-down mode. With PDTFTEN high in power-down mode, the power-up time is 10 ms.	0	PDTFTEN
	7	REFDACDIS	Reference DAC disable. 1: allows the user to disable the on-board reference DAC, saving 5 mW. This offers the user the option to customize power-down mode and sleep mode. The REF_OUT of one AD71124 can set REF_TFT and REF_INT of other AD71124 devices in a single panel.	0	REFDACDIS
	6	Not used	These bits are for factory use only. Keep these bits low.	0	0
	5	RNDOMIZE	Randomize. This bit enables random sampling of the 256 integrators via the internal multiplexer and helps minimize the effects of pattern noise. 1: random sampling. 0: the sampling process is performed in a sequential manner, starting with Channel 0.	1	RNDOMIZE
	4	Not used	This bit is for factory use only. Keep this bit low.	0	0
	3	INTCLAMP	Integrator clamp. 1: enables internal clamping circuitry on the input of the integrators. This prevents the integrator from saturating to the rails by removing any excess charge present on the integrator. This feature acts as an antiblooming mechanism.	0	INTCLAMP
	2	DOUTMODE	Data output mode. This bit enables double data rate mode. 1: data is output on both the DOUTAx and DOUTBx pins. Line times of <32 µs are also enabled. 0: serial mode. The conversion data is output serially on the DOUTAx pins.	0	DOUT-MODE
	1	ECHOCLK	This bit enables DCLKOx, the optional LVDS echo clock output.	0	ECHOCLK
	0	Pipeline	This bit allows the user to determine when the conversion process takes place with respect to the AFE sampling. 1: AFE sampling and the data conversion process occur in parallel (pipeline mode). 0: AFE sampling and the data conversion process occur serially. There is always a pipeline delay of 1 in the data output with respect to the conversion process.	0	Pipeline
3	15 (MSB)	Write	1: writes the 15 bits that follow in Configuration Register 3 on the next CS falling edge. 0: ignores the 15 bits that follow. For the write operation to work, the read bit must be low.	0	0
	14	Read	1: the contents of Configuration Register 3 are output on SDO after the next rising edge of CS (see Figure 41). For the read operation to work, the write bit must be low.	0	0
	[13:10]	ADDR	Configuration register address bits. ADDR must be set to 3 for Configuration Register 3.	3	3
	9	Not used	This bit is for factory use only. Keep this bit low.	0	0
	8	AZEN	Auto-zero enable. 1: enables the auto-zeroing function, offering an improvement in 1/f noise. VT and temperature are not digitized by the ADC. There is no data associated with them; 0s are output.	0	AZEN
	[7:0]	REFDAC	Reference DAC. These bits determine the value for the internal reference from 0.5 V to 4.5 V. LSB size = 15.625 mV.	128	REFDAC
4	15 (MSB)	Write	1: writes the 15 bits that follow in Configuration Register 4 on the next CS falling edge. 0: ignores the 15 bits that follow. For the write operation to work, the read bit must be low.	0	0
	14	Read	1: the contents of Configuration Register 4 are output on SDO after the next rising edge of CS (see Figure 41). For the read operation to work, the write bit must be low.	0	0
	[13:10]	ADDR	Configuration register address bits. ADDR must be set to 4 for Configuration Register 4.	4	4
	[9:8]	Not used	These bits are for factory use only. Keep these bits low.	0	0

ADI Confidential Only for Abyzr

Reg. No.	Bits	Bit Name	Description	Reset State	Readback Value
	[7:4]	INTRST_C	Integrator reset switch close control. These bits control when the timing integrator reset switch closes. The value of these bits corresponds to the rising edge of ACLK in a frame. Acceptable values for INTRST_C are 0x0 to 0xC.	7	INTRST_C
	[3:0]	INTRST_O	Integrator reset switch open control. These bits control when the timing integrator reset switch opens. The value of these bits corresponds to the rising edge of ACLK in a frame. A value of 0xF keeps this switch closed. A value of 0xE keeps this switch open. When 0xF or 0xE is used, INTRST_C is ignored. Acceptable values for INTRST_O are 0x0 to 0xC, 0xE, and 0xF.	1	INTRST_O
5	15 (MSB)	Write	1: writes the 15 bits that follow in Configuration Register 5 on the next CS falling edge. 0: ignores the 15 bits that follow. For the write operation to work, the read bit must be low.	0	0
	14	Read	1: the contents of Configuration Register 5 are output on SDO after the next rising edge of CS (see Figure 41). For the read operation to work, the write bit must be low.	0	0
	[13:10]	ADDR	Configuration register address bits. ADDR must be set to 5 for Configuration Register 5.	5	5
	[9:8]	Not used	These bits are for factory use only. Keep these bits low.	0	0
	[7:4]	CDS1_C	CDS1 switch close control. These bits control when the CDS1 switch closes. The value of these bits corresponds to the rising edge of ACLK in a frame. Acceptable values for CDS1_C are 0x0 to 0xC.	0	CDS1_C
	[3:0]	CDS1_O	CDS1 switch open control. These bits control when the CDS1 switch opens. The value of these bits corresponds to the rising edge of ACLK in a frame. A value of 0xF keeps this switch closed. A value of 0xE keeps this switch open. When 0xF or 0xE is used, CDS1_C is ignored. Acceptable values for CDS1_O are 0x0 to 0xC, 0xE, and 0xF.	3	CDS1_O
6	15 (MSB)	Write	1: writes the 15 bits that follow in Configuration Register 6 on the next CS falling edge. 0: ignores the 15 bits that follow. For the write operation to work, the read bit must be low.	0	0
	14	Read	1: the contents of Configuration Register 6 are output on SDO after the next rising edge of CS (see Figure 41). For the read operation to work, the write bit must be low.	0	0
	[13:10]	ADDR	Configuration register address bits. ADDR must be set to 6 for Configuration Register 6.	6	6
	[9:8]	Not used	These bits are for factory use only. Keep these bits low.	0	0
	[7:4]	CDS2_C	CDS2 switch close control. These bits control when the CDS2 switch closes. The value of these bits corresponds to the rising edge of ACLK in a frame. Acceptable values for CDS2_C are 0x0 to 0xC.	4	CDS2_C
	[3:0]	CDS2_O	CDS2 switch open control. These bits control when the CDS2 switch opens. The value of these bits corresponds to the rising edge of ACLK in a frame. A value of 0xF keeps this switch closed. A value of 0xE keeps this switch open. When 0xF or 0xE is used, CDS2_C is ignored. Acceptable values for CDS2_O are 0x0 to 0xC, 0xE, and 0xF.	6	CDS2_O
7	15 (MSB)	Write	1: writes the 15 bits that follow in Configuration Register 7 on the next CS falling edge. 0: ignores the 15 bits that follow. For the write operation to work, the read bit must be low.	0	0
	14	Read	1: the contents of Configuration Register 7 are output on SDO after the next rising edge of CS (see Figure 41). For the read operation to work, the write bit must be low.	0	0
	[13:10]	ADDR	Configuration register address bits. ADDR must be set to 7 for Configuration Register 7.	7	7
	[9:8]	Not used	These bits are for factory use only. Keep these bits low.	0	
	[7:4]	FA_CDS1	Filter acceleration switch for CDS1. These bits control the filter acceleration switch for the low-pass filter of CDS1. The value of these bits corresponds to the rising edge of ACLK in a frame. A value of 0xF keeps this switch closed, and a value of 0xE forces this switch open. Acceptable values for FA_CDS1 are 0x0 to 0xC, 0xE, and 0xF.	2	FA_CDS1
	[3:0]	FA_CDS2	Filter acceleration switch for CDS2. These bits control the filter acceleration switch for the low-pass filter of CDS2. The value of these bits corresponds to the rising edge of ACLK in a frame. A value of 0xF keeps this switch closed, and a value of 0xE forces this switch open. Acceptable values for FA_CDS2 are 0x0 to 0xC, 0xE, and 0xF.	5	FA_CDS2
8	15 (MSB)	Write	1: writes the 15 bits that follow in Configuration Register 8 on the next CS falling edge. 0: ignores the 15 bits that follow. For the write operation to work, the read bit must be low.	0	0
	14	Read	1: the contents of Configuration Register 8 are output on SDO after the next rising edge of CS (see Figure 41). For the read operation to work, the write bit must be low.	0	0
	[13:10]	ADDR	Configuration register address bits. ADDR must be set to 8 for Configuration Register 8.	8	8
	9	Not used	These bits are for factory use only. Keep these bits low.	0	0
	8	CUSTCLMPEN	Custom clamp enable. 1: enables the custom clamp timing feature.	0	CUSTCLMPEN

ADI Confidential
Only for ADWZ

Reg. No.	Bits	Bit Name	Description	Reset State	Readback Value
	[7:4]	CUSTCLMP_C	Custom clamp closed. These bits control when the custom clamp comparator is enabled, activating the clamp circuitry. The value of these bits corresponds to the rising edge of ACLK. Acceptable values for CUSTCLMP_C are 0x0 to 0xC.	0	CUSTCLMP _C
	[3:0]	CUSTCLMP_O	Custom clamp open. These bits control when the custom clamp comparator is disabled, deactivating the clamp circuitry. The value of these bits corresponds to the rising edge of ACLK. Acceptable values for CUSTCLMP_O are 0x0 to 0xC.	0	CUSTCLMP _O
9	15 (MSB)	Write	1: writes the 15 bits that follow in Configuration Register 9 on the next CS falling edge. 0: ignores the 15 bits that follow. For the write operation to work, the read bit must be low.	0	0
	14	Read	1: the contents of Configuration Register 9 are output on SDO after the next rising edge of CS (see Figure 41). For the read operation to work, the write bit must be low.	0	0
	[13:10]	ADDR	Configuration register address bits. ADDR must be set to 9 for Configuration Register 9.	9	9
	[9:0]	Not used	These bits are for factory use only. Keep these bits at their reset value.	7	7
10	15 (MSB)	Write	1: writes the 15 bits that follow in Configuration Register 10 on the next CS falling edge. 0: ignores the 15 bits that follow. For the write operation to work, the read bit must be low.	0	0
	14	Read	1: the contents of Configuration Register 10 are output on SDO after the next rising edge of CS (see Figure 41). For the read operation to work, the write bit must be low.	0	0
	[13:10]	ADDR	Configuration register address bits. ADDR must be set to 10 for Configuration Register 10.	10	10
	[9:1]	Not used	These bits are for factory use only. Keep these bits low.	0	0
	0	PIPELINE_ AVGEN	Pipeline average enable. 1: enables ADC averaging during pipeline mode.	0	PIPELINE_ AVGEN
11	15 (MSB)	Write	1: writes the 15 bits that follow in Configuration Register 11 on the next CS falling edge. 0: ignores the 15 bits that follow. For the write operation to work, the read bit must be low.	0	0
	14	Read	1: the contents of Configuration Register 11 are output on SDO after the next rising edge of CS (see Figure 41). For the read operation to work, the write bit must be low.	0	0
	[13:10]	ADDR	Configuration register address bits. ADDR must be set to 11 for Configuration Register 11.	11	11
	[9:7]	Not used	These bits are for factory use only. Keep these bits at their reset value.	0	0
	6	LFSR_EN	Linear feedback shift register enable. 1: enables the LFSR feature. See the Digital Interface Integrity section for more details.	0	LFSR_EN
	[5:0]	Not used	These bits are for factory use only. Keep these bits at their reset value.	24	24
12	15 (MSB)	Write	1: writes the 15 bits that follow in Configuration Register 12 on the next CS falling edge. 0: ignores the 15 bits that follow. For the write operation to work, the read bit must be low.	0	0
	14	Read	1: the contents of Configuration Register 12 are output on SDO after the next rising edge of CS (see Figure 41). For the read operation to work, the write bit must be low.	0	0
	[13:10]	ADDR	Configuration register address bits. ADDR must be set to 12 for Configuration Register 12.	12	12
	9	Not used	This bit is for factory use only. Keep this bit low.	0	0
	8	FUNCSLEEP	Functional sleep mode. 1: powers up the integrators when sleep mode is in use.	0	FUNC-SLEEP
	[7:0]	Not used	These bits are for factory use only. Keep these bits at their reset value.	2	2
13	15 (MSB)	Write	1: writes the 15 bits that follow in Configuration Register 13 on the next CS falling edge. 0: ignores the 15 bits that follow. For the write operation to work, the read bit must be low.	0	0
	14	Read	1: the contents of Configuration Register 13 are output on SDO after the next rising edge of CS (see Figure 41). For the read operation to work, the write bit must be low.	0	0
	[13:10]	ADDR	Configuration register address bits. ADDR must be set to 13 for Configuration Register 13.	13	13
	[9:0]	Not used	These bits are for factory use only. Keep these bits at their reset value.	35	35
14	15 (MSB)	Write	1: writes the 15 bits that follow in Configuration Register 14 on the next CS falling edge. 0: ignores the 15 bits that follow. For the write operation to work, the read bit must be low.	0	0
	14	Read	1: the contents of Configuration Register 14 are output on SDO after the next rising edge of CS (see Figure 41). For the read operation to work, the write bit must be low.	0	0
	[13:10]	ADDR	Configuration register address bits. ADDR must be set to 14 for Configuration Register 14.	14	14
	[9:0]	Not used	These bits are for factory use only. Keep these bits at their reset value.	43	43
15	15 (MSB)	Write	1: writes the 15 bits that follow in Configuration Register 15 on the next CS falling edge. 0: ignores the 15 bits that follow. For the write operation to work, the read bit must be low.	0	0
	14	Read	1: the contents of Configuration Register 15 are output on SDO after the next rising edge of CS (see Figure 41). For the read operation to work, the write bit must be low.	0	0
	[13:10]	ADDR	Configuration register address bits. ADDR must be set to 15 for Configuration Register 15.	15	15
	[9:0]	Not used	These bits are for factory use only. Keep these bits at their reset value.	8	8

ADI Confidential
Only for ADVZR

OUTLINE DIMENSIONS

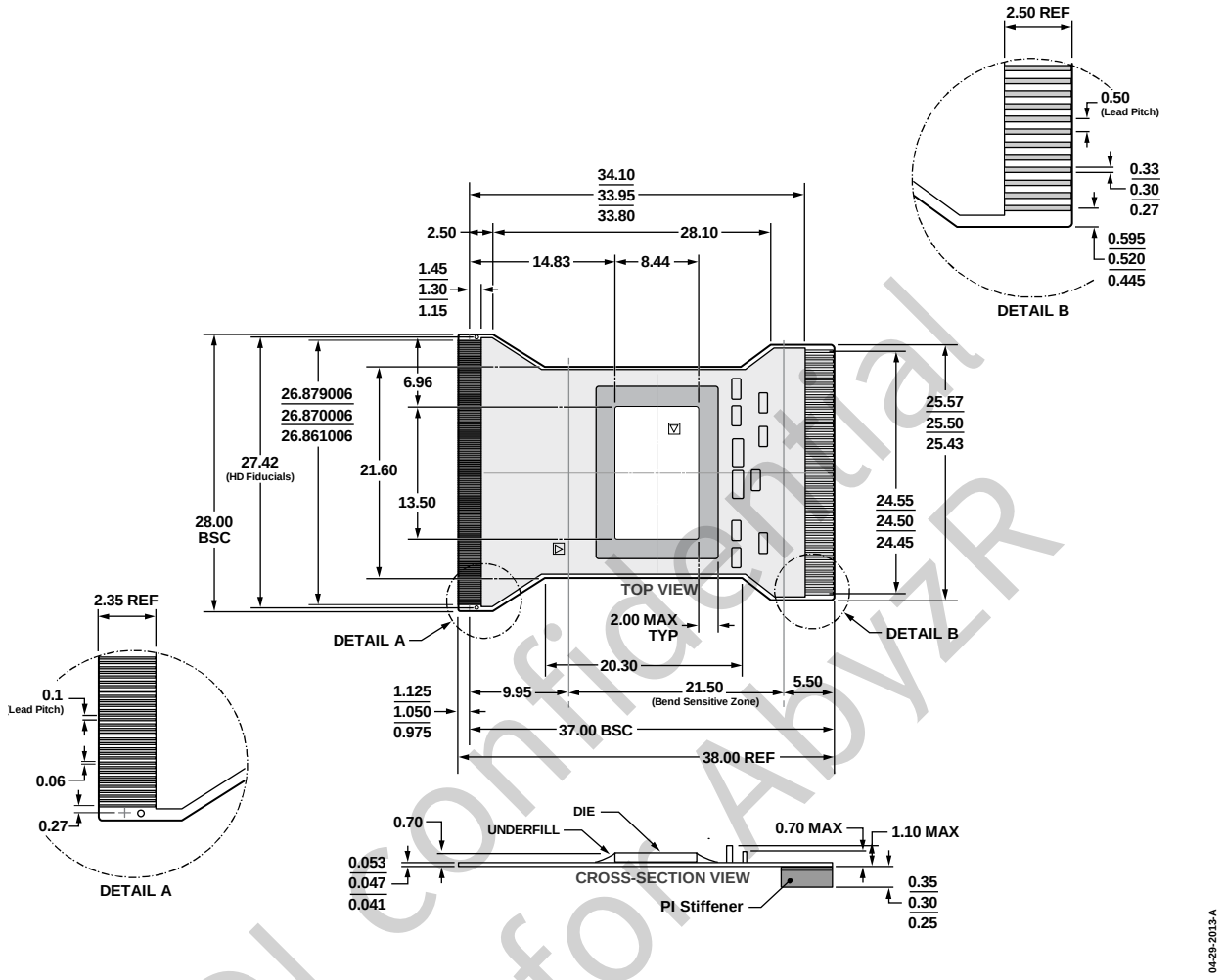

Figure 42. 320-Lead System-on-Film [SOF]
(CF-320-5)
Dimensions shown in millimeters
(Uncontrolled Package Drawing. Contact Analog Devices for a Package Drawing of the SOF in Your System.)

ADI confidential
Only for AbyzR

ORDERING GUIDE

Model[1, 2, 3, 4]	Temperature Range	Package Description[2]	Package Option
AD71124JCFZ	0°C to 70°C	320-Lead System-on-Film [SOF]	CF-320-5
EVAL-ADAS1256SDZ		Evaluation Board	
EVAL-SDP-CB1Z		System Development Platform	

[1] Z = RoHS Compliant Part.
[2] Contact Analog Devices for information about other SOF models.
[3] The EVAL-ADAS1256SDZ board must be used in conjunction with the EVAL-SDP-CB1Z for evaluation/demonstration purposes.
[4] The EVAL-SDP-CB1Z board allows a PC to control and communicate with all Analog Devices evaluation boards with models ending tin the SDZ designator as well as the EVAL-ADAS1256SDZ evaluation board. This board must be ordered separately.

NOTES

ADI confidential
Only for AbyzR

NOTES

ADI confidential
Only for AbyzR

NOTES

ADI confidential
Only for AbyzR

©2013–2016 Analog Devices, Inc. All rights reserved. Trademarks and registered trademarks are the property of their respective owners.
D11438-0-6/16(SpB)