# Customer Acceptance Specification

## Model Name:

## X239AW1-102

## Product ID:

## 2131S23902012

Customer: _____

Approved by: _____

Note:

| Approved By | Checked By | Prepared By |
|---|---|---|
| 郭隆宗 2019. 2. 18 | 陳泉逸 2019. 2. 18 | 王文堂 2019. 2. 18 |

## REVISION HISTORY

| Version | Date | Page (New) | Section | Description |
|---|---|---|---|---|
| 1.0 | Nov, 20,'17 | All | All | Approval specification was first issued. |
| 1.1 | Jul, 06,'18 | P.6-8 | 5.2 | Add panel Alignment mark |
| 1.1 | Jul, 06,'18 | P.6-8 | 6.0 | Modify Defect criteria |
| 1.2 | Feb,18,'19 | P.13 | 10.3 | Modify Packing drawing |

## Contents

REVISION HISTORY ..... 2

1.0 SCOPE ..... 4

2.0 PURPOSE ..... 4

3.0 PERSONNEL ..... 4

4.0 GENERAL SPECIFICATION ..... 4

5.0 PANEL LAYOUT AND DIMENSION ..... 5

*5.1 ELECTRICAL INPUT RANGE OF X239AW1-102 ..... 5*

*5.2 X239AW1-102 OUTLINE ..... 6*

6.0 ATST SPECIFICATION ..... 7

*6.1 DEFECT DEFINITIONS ..... 7*

*6.2 DEFECTS SPECIFICATIONS ..... 7*

7.0 VISUAL INSPECTION & AOI INSPECTION ..... 9

8.0 SERIAL NUMBER ID (TFT ID) ..... 9

9.0 ENVIRONMENTAL SPECIFICATION ..... 10

*9.1 TEMPERATURE ..... 10*

*9.2 RELATIVE HUMIDITY ..... 10*

*9.3 ELECTROSTATIC DISCHARGE SENSITIVITY ..... 10*

*9.4 HANDLING DRAWING ..... 11*

10.0 PRODUCT IDENTIFICATION AND PACKAGE ..... 12

*10.1 ARRAY IDENTIFICATION ..... 12*

*10.2 ARRAY TEST DOCUMENTATION ..... 12*

*10.3 ARRAY PACKAGING ..... 12*

*10.4 DEFINITION OF LABELS ..... 14*

***10.4.1 Cell Label ..... 14***

***10.4.2 Carton Label ..... 14***

## 1.0 SCOPE

This document provides the product requirement for the X239AW1-102, 43 cm x 43 cm amorphous silicon (a-Si) sensor array of InnoLux. The process flow of this product is 12 masks process. The array panel is composed of a glass substrate on which materials are deposited to fabricate the thin film transistor (TFT), PD sensor layer, Bias lines and contact pads; those enable the connection of the pixel array to the readout electronics.

## 2.0 PURPOSE

This document provides the product requirements for the X239AW1-102, 43 cm x 43 cm sensor array.

## 3.0 PERSONNEL

This document applies to customers with external supplier on the 43 cm x 43 cm product.

## 4.0 GENERAL SPECIFICATION

The InnoLux 43 cm x 43 cm sensor array is a two-dimensional array with thin-film transistor (TFT) switches based on amorphous silicon (a-Si) technology. The array has an approximate pixel area of 43 cm x 43 cm. Pixels are addressed through 3072 data lines and 3072 gate lines. The 9,437,184 pixels are arranged in a matrix of 3072 x 3072. Each pixel size is 140 μm × 140 μm.

The table below defines the result of assessment and the design parameter of X239AW1-102 sensor array.

| | Design parameter | Specification |
|---|---|---|
| Basic Spec. | Entire dimensions include outer short ring | 470 (X) mm x 470 (Y) mm |
| | Panel size<br>(outer short ring removed ) | 445 mm x 445 mm<br>with tolerance ± 0.2 mm |
| | Active pixel area size | 430.08 mm x 430.08 mm |

| | | |
|---|---|---|
| | Number of active area pixel | 3072 x 3072 = 9,437,184 |
| | Number of data line | 3072 |
| | Number of gate line | 3072 |
| | Glass thickness | 0.7mm |
| | Shipping size | 445 mm x 445 mm |
| Peripheral spec. | Number of Gate Pad Blocks | 6 |
| | Number of Data Pad Blocks | 12 |
| | Gate Pad Block Pitch | 71.68 mm |
| | Data Pad Block Pitch | 35.84 mm |
| | Gate Pads per Block | 562 |
| | Data Pads per Block | 270 |
| | Data finger dimension and pitch | 66 um (W) / 2200 um (L) / 100 um (Pitch) |
| | Gate finger dimension and pitch | 44 um (W) / 1000 um (L) / 72 um (Pitch) |

## 5.0 Panel Layout and Dimension

### 5.1 *Electrical Input Range of X239AW1-102*

| Electrical Inputs | Unit | Min. | Typ. | Max. |
|---|---|---|---|---|
| Gate-on Voltage (VGH) | V | 5 | 15 | 23 |
| Gate-off Voltage (VGL) | V | -12 | -5 | -3 |
| Photodiode Bias Voltage | V | -10 | -5 | -3 |

## 5.2 X239AW1-102 Outline

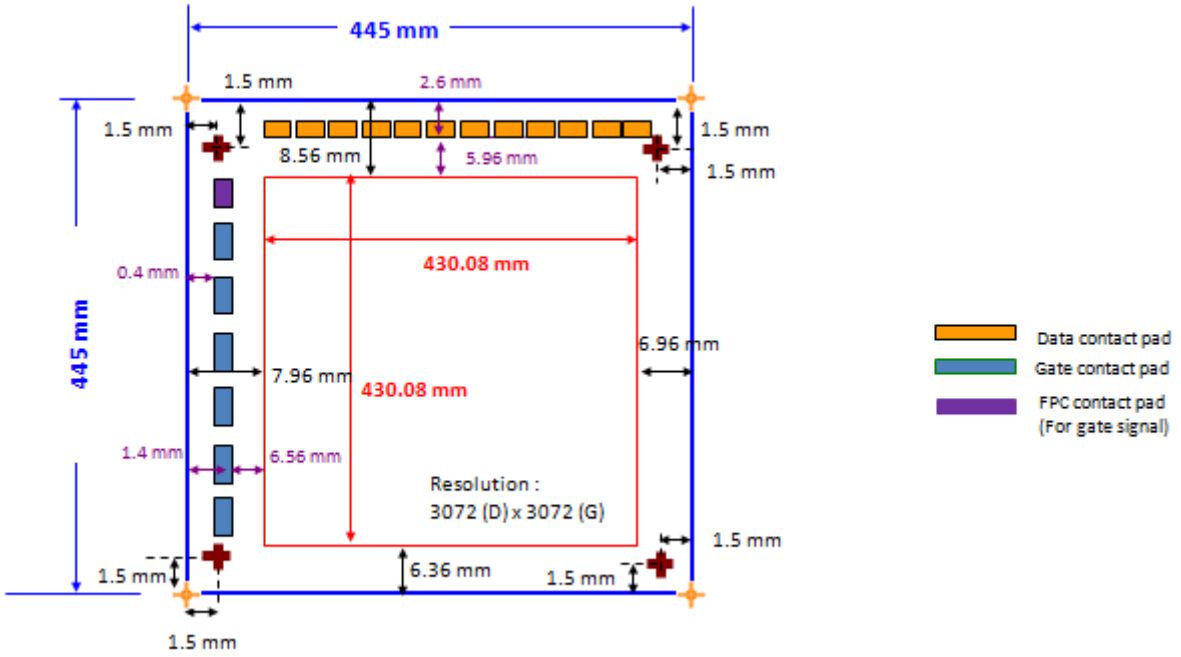

## 6.0 ATST SPECIFICATION

All TFT array panels would be done by the probe test for electrical properties. All point and line defects in the array are identified by the probe test. The probe test measures the charge of the pixels storage capacitors through TFT under dark environment.

### 6.1 *Defect Definitions*

Point defect: A point is a point defect when its charge value is 15% higher or less than Panel Median value in active area.

### 6.2 *Defects Specifications*

■ Pixel Defect

1. Single pixel defect

| Panel Size | Allowed number of Pixel Defect |
|---|---|
| 10 x 12 | 1,200 |
| 14 x 17 | 2,200 |
| 17 x 17 | 2,400 |

2. Cluster

1) in 3x3 Window, allow Max 6 Pixel Defect

- There must be Normal Pixel at least on 2 lines on every direction (Row, Column)

| Panel Size | The number of Pixel Defect in 3x3 window | Allowed number of clusters |
|---|---|---|
| 14x17 | 2 | 1,050 |
| | 3 | 530 |
| | 4 | 320 |
| | 5 | 110 |
| | 6 | 50 |

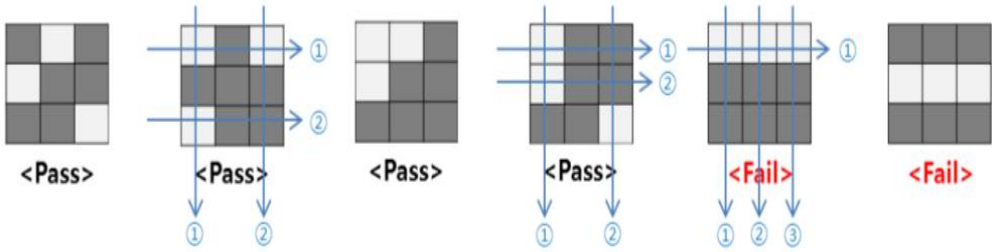

## ■ Line Defect

| Panel Size | Allowed number of Pixel Defect |
|---|---|
| All | Column + Row = 12 |

| Panel Size | Allowed Gap(Lines) |
|---|---|
| All | 4 |

| Panel Size | Allowed number of line Defects in 11 line window |
|---|---|
| All | 2 |

Ex)

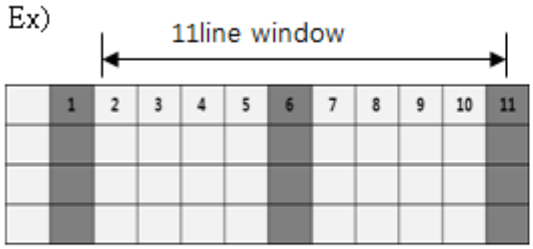


Between Line Defect, Gap = 4
3 Line defect can be in 11Line Window

<Fail>

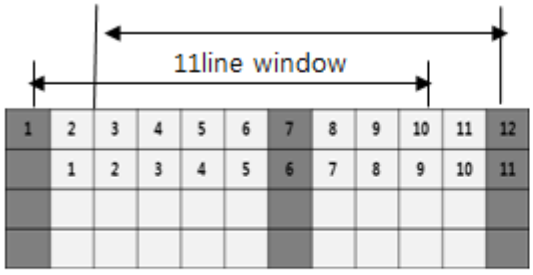


Between Line Defect, Gap = 4
2 Line Defect can be in 11Line Window

<Pass>

## 7.0 Visual Inspection & AOI Inspection

All TFT arrays are visually inspected. The visual inspection includes an inspection of the array against a white light to identify gross defects such as:

- The breach angle of glass is over 90 degree and do not damage the mark on glass edge.

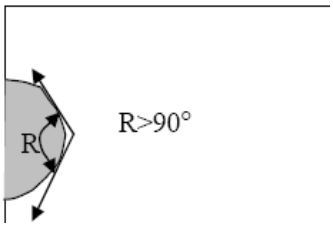


- No scratches and cracks on active area and bonding pad.
- No surface debris and contamination on active area and bonding pad.
- No missing material and metal residue on TFT array.

## 8.0 Serial Number ID (TFT ID)

Example T261K196NV01

| digits | example | item | description |
|---|---|---|---|
| 1,2 | T2 | Fab code | TFT Fab2 |
| 3 | 6 | Year code | refer to table 1 |
| 4 | 1 | Month code | refer to table 2 |
| 5 | K | Day code | refer to table 3 |
| 6~8 | 196 | serial number | |
| 9~10 | NV | Lot number | 20pcs in a lot from NA to NV , except NI and NO |
| 11~12 | 01 | Chip number | |

Table 1 Year code

| Year | 2014 | 2015 | 2016 | 2017 | 2018 | 2019 |
|---|---|---|---|---|---|---|
| Code | 4 | 5 | 6 | 7 | 8 | 9 |

Table 2 Month code

| Month | Jan | Feb | Mar | Apr | May | Jun | Jul | Aug | Sep | Oct | Nov | Dec |
|---|---|---|---|---|---|---|---|---|---|---|---|---|
| Code | 1 | 2 | 3 | 4 | 5 | 6 | 7 | 8 | 9 | A | B | C |

Table 3 Day code

| Day | 1 | 2 | 3 | 4 | 5 | 6 | 7 | 8 | 9 | 10 | 11 |
|---|---|---|---|---|---|---|---|---|---|---|---|
| Code | 1 | 2 | 3 | 4 | 5 | 6 | 7 | 8 | 9 | A | B |

| Day | 12 | 13 | 14 | 15 | 16 | 17 | 18 | 19 | 20 | 21 | 22 |
|---|---|---|---|---|---|---|---|---|---|---|---|
| Code | C | D | E | F | G | H | J | K | L | M | N |

| Day | 23 | 24 | 25 | 26 | 27 | 28 | 29 | 30 | 31 |
|---|---|---|---|---|---|---|---|---|---|
| Code | P | Q | R | S | T | U | V | W | X |

## 9.0 ENVIRONMENTAL SPECIFICATION

The environmental specification includes acceptable ranges of temperature and humidity and a description of electrostatic discharge (ESD) protection requirements.

### 9.1 *TEMPERATURE*

| | |
|---|---|
| Operation | +10°C to +40°C |
| Storage | –20°C to +50°C |
| Rate of change | 1°C / minute |

### 9.2 *RELATIVE HUMIDITY*

| | |
|---|---|
| Operation | 15% to 90% |
| Storage | 5% to 95% |

### 9.3 *ELECTROSTATIC DISCHARGE SENSITIVITY*

This device is sensitive to electrostatic discharge (ESD). Handling this device requires adoption of a general ESD control program according to *099-JESD625-A, SCD, Requirements for Handling Electrostatic-Discharge-Sensitive (ESDS) Devices.* The specification target is HBM class 1B (Voltage range > 500 but <1000V, as described in *ANSI/ESD STM5.1-2001*).

The fundamentals are as follows:

- ESD protective work surface
- ESD protective floor mats
- Wrist straps
- ESD protective smocks
- Air ionizers
- Removal of static generating sources from ESD protected areas
- ESD protected handling and packaging materials (antistatic-containers)
- ESD protected area identification (warning signs and labels)
- ESD protection level monitoring (surface resistance, static fields, wrist monitors)
- ESD audits

Workstations must also include, or be in, the presence of airflow ionizers, ensuring that arrays will be in the presence of ionized airflow for a period of one minute before and after transferring arrays between workstations.

### 9.4 *Handling Drawing*

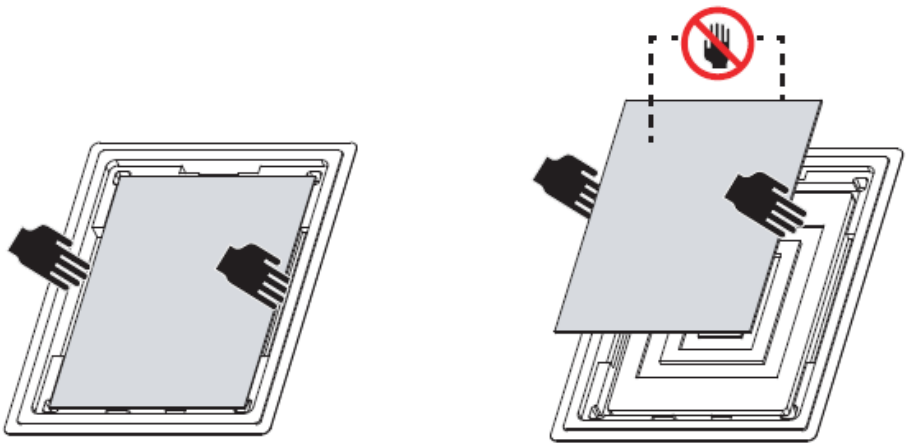

# 10.0 PRODUCT IDENTIFICATION AND PACKAGE

## 10.1 *ARRAY IDENTIFICATION*

Each array is identified by a unique serial plate number with laser mark on the face of the glass. Any container used for handling and shipping, as well as any deliverable test data or documentation, bears the same serial number.

## 10.2 *ARRAY TEST DOCUMENTATION*

Test documentation for each array includes flat field images, a defect map, and a summary test report.

## 10.3 *ARRAY PACKAGING*

Product is shipped by the size 445 mm x 445 mm.

Each array is shipped in a molded carrier designed to help protect the array from electrostatic discharge (ESD) and mechanical shock. Antistatic foam and box surround the immediate carrier.

Each array is shipped with the test documentation listed above.

**Packing method.**

(1) Carton Packing should have no failure in the following reliability test items

| Test Item | Test Conditions | Note |
|---|---|---|
| Packing Vibration | ISTA STANDARD<br>Random, Frequency Range: 1 – 200 Hz<br>Top & Bottom: 30 minutes (+Z), 10 min (-Z),<br>Right & Left: 10 minutes (X)<br>Back & Forth 10 minutes (Y) | Non Operation |

(2) Packing drawing

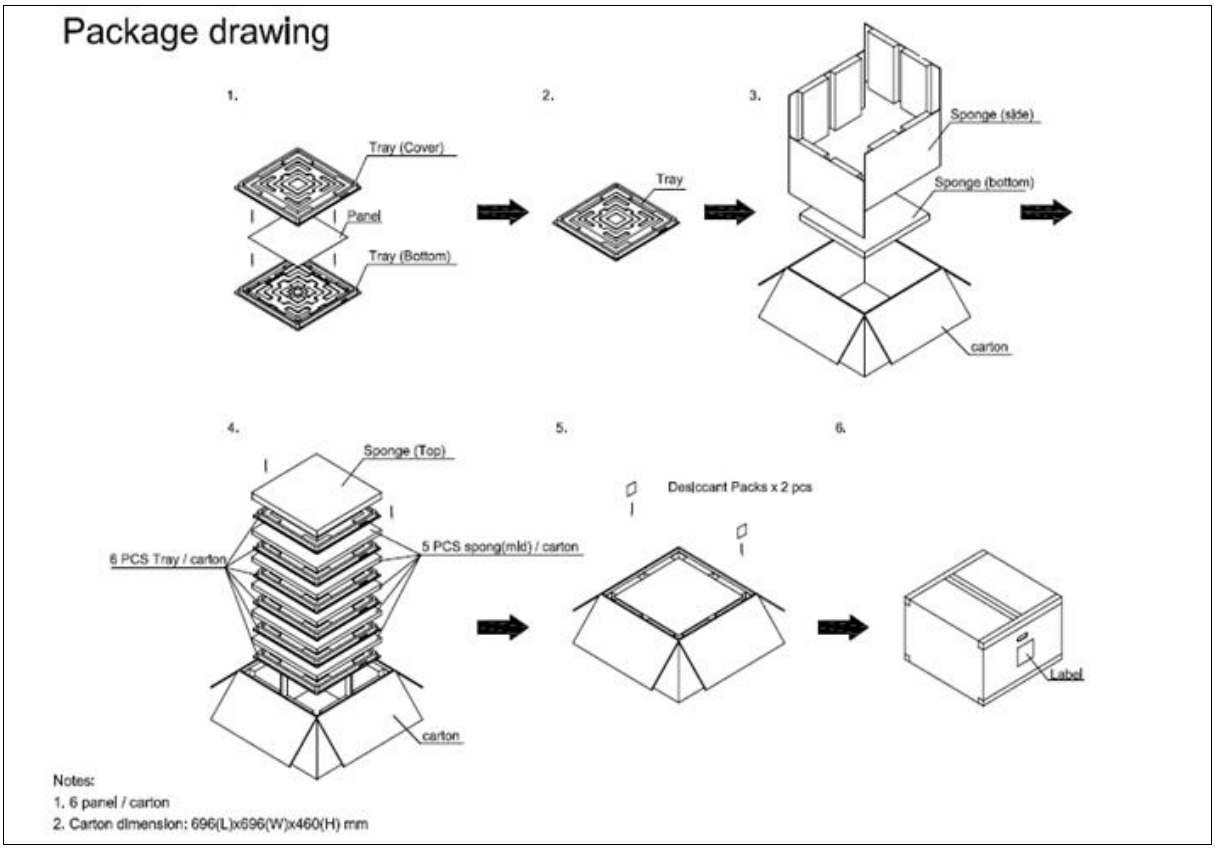


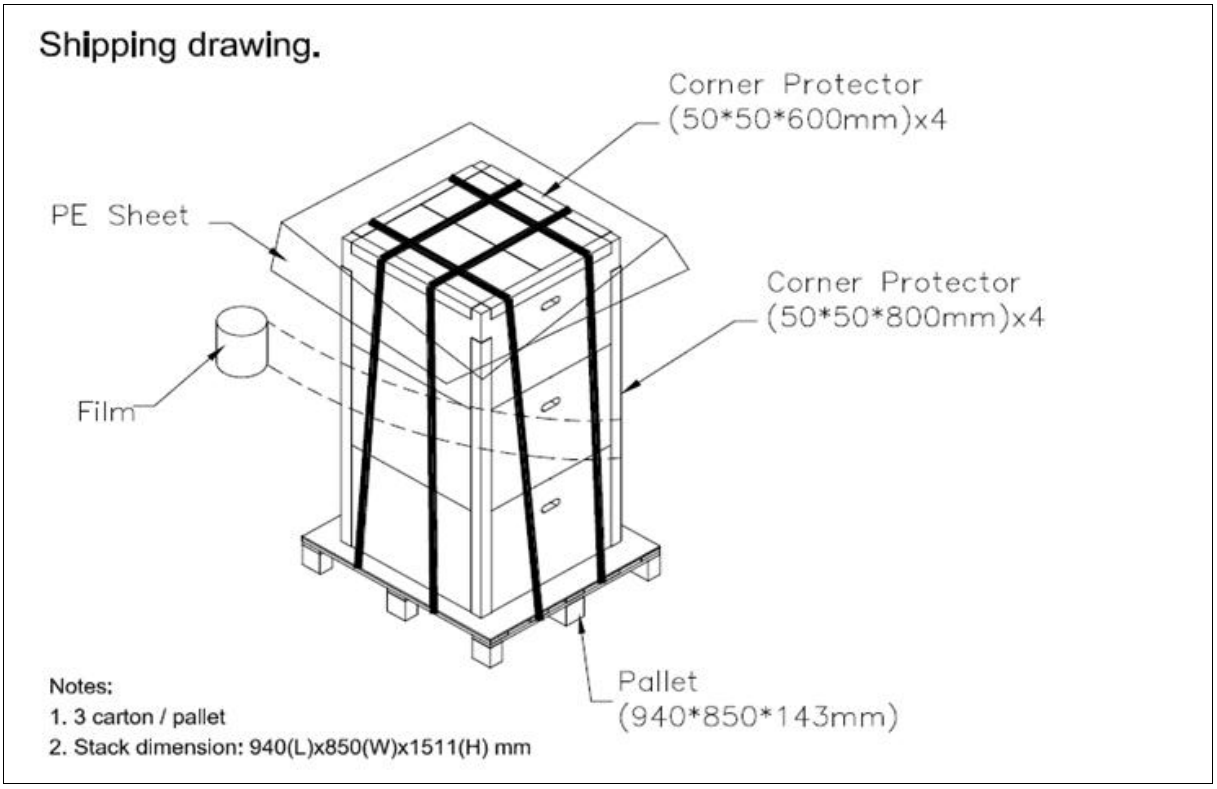


**Air transportation**

## 10.4 *Definition of Labels*

### 10.4.1 Cell Label

The panel ID barcode is pasted on outside of pizza Box for control.

### 10.4.2 Carton Label

The barcode nameplate is pasted on each box as illustration, and its definitions are as following explanation

(a) Product Name : X239AW1-102

(b) Quantities : XX pcs

(c) P/N code : CMI part number for internal recognize (2131S23902012)