Customer's Acceptance Specification

Model Name:

1717

Customer : _____

Approved by : _____

Note:

Approved By	Checked By	Prepared By
		Alex Chen

REVISION HISTORY

Version	Date	Page (New)	Section	Description
preliminary	Nov, 8,'13	All	All	Approval specification was first issued.
preliminary	Nov, 20,'13	8	6.2	Correct the shot number of AA from 16 to 12, and total is 59 shots.
preliminary	Dec, 10,'13	5	1.0	Correct type error.

Contents

1.0 SCOPE 5

2.0 PURPOSE 5

3.0 PERSONNEL 5

4.0 GENERAL SPECIFICATION 5

5.0 PANEL LAYOUT AND DIMENSION 7

5.1 SUBSTRATE OUTLINE 7

5.2 1717 OUTLINE 7

6.0 MASK AND SHOT ON SUBSTRATE 8

6.1 MASK SET 8

6.2 SHOT ARRANGEMENT 8

7.0 ELECTRICAL DIAGRAM 9

BIAS LINE IS PROVIDED FROM READ-OUT SIDE, AND INNER SHORT RING IS SHORT TO VGL FROM GATE SIDE. 9

7.1 ELECTRICAL INPUT RANGE 9

8.0 CD AND OL SPECIFICATION 10

8.1 CD SPECIFICATION & MEASUREMENT POSITION 10

8.2 OL SPECIFICATION & MEASUREMENT POSITION 10

9.0 TEG SPECIFICATION 11

9.1 PARAMETER AND CONDITION 11

9.2 MEASUREMENT POSITION 12

10.0 ATST SPECIFICATION 12

10.1 DEFECT DEFINITIONS 12

10.2 DEFECTS SPECIFICATIONS 12

11.0 VISUAL INSPECTION & AOI INSPECTION 13

12.0 ENVIRONMENTAL SPECIFICATION 13

12.1 TEMPERATURE 13

12.2 RELATIVE HUMIDITY 13

12.3 ELECTROSTATIC DISCHARGE SENSITIVITY 13

13.0 PRODUCT IDENTIFICATION AND PACKAGE 14

13.1 ARRAY IDENTIFICATION 14
13.2 ARRAY TEST DOCUMENTATION 14
13.3 ARRAY PACKAGING 14

1.0 SCOPE

This document provides the product requirement for the 1717, 43 cm x 43 cm amorphous silicon (a-Si) sensor array of InnoLux. The process flow of this product is 12 masks process. The array panel is composed of a glass substrate on which materials are deposited to fabricate the thin film transistor (TFT), PD sensor layer, Bias lines and contact pads, those enable the connection of the pixel array to the readout electronics.

2.0 PURPOSE

This document provides the product requirements for the 1717, 43 cm x 43 cm sensor array.

3.0 PERSONNEL

This document applies to customers with external supplier on the 43 cm x 43 cm product.

4.0 GENERAL SPECIFICATION

The InnoLux 43 cm x 43 cm sensor array is a two-dimensional array with thin-film transistor (TFT) switches based on amorphous silicon (a-Si) technology. The array has an approximate pixel area of 43 cm x 43 cm. Pixels are addressed through 3072 data lines and 3072 gate lines. The 9,437,184 pixels are arranged in a matrix of 3072 x 3072. Each pixel size is 140 μm × 140 μm.

The table below defines the result of assessment and the design parameter of 1717 sensor array.

	Design parameter	Specification
Basic Spec.	Entire dimensions include outer short ring	470 (X) mm x 470 (Y) mm
	Panel size (outer short ring removed)	445 mm x 445 mm
	Active pixel area size	430.08 mm x 430.08 mm
	Number of active area pixel	3072 x 3072 = 9,437,184

	Number of data line	3072
	Number of gate line	3072
	Glass thickness	AN100 / 0.7mm
	Shipping size	445 mm x 445 mm
Pixel spec.	Pixel pitch	140 um x 140 um
	TFT channel size	W/L 17/5
	Gate line width	7 um
	Gate line material	AlNd \ MoN
	Data line width	9.5 um
	Data line material	MoN \ Al \ MoN
	Bias line width	8 um
	Bias line material	MoN \ Al \ MoN
	PD sensor material	N^+ \ a-Si \ P^+
Peripheral spec.	Number of Gate Pad Blocks	6
	Number of Data Pad Blocks	12
	Gate Pad Block Pitch	71.68 mm
	Data Pad Block Pitch	35.84 mm
	Gate Pads per Block	562
	Data Pads per Block	270
	Contact Pad Metal	MoN \ ITO
	Contact Pad Pitch (Gate, Data)	(72 um , 100 um)
	Contact Pad Width (Gate, Data)	(44 um , 66 um)
	Contact Pad Length (Gate, Data)	(1 mm, 2.2 mm)

5.0 Panel Layout and Dimension

5.1 *Substrate Outline*

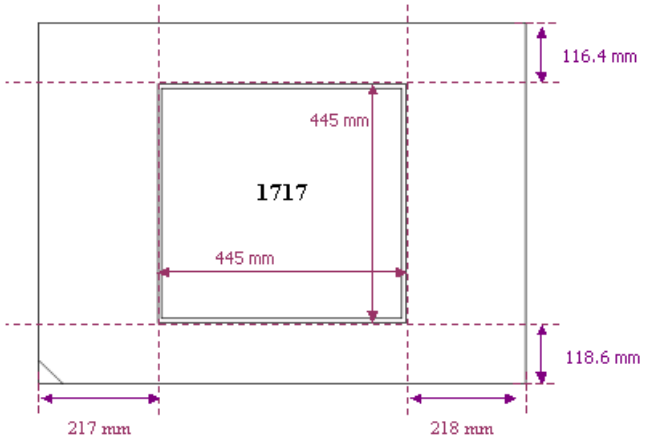

Substrate : 680 mm x 880 mm, 0.7 mm thickness
1 panel / substrate

5.2 *1717 Outline*

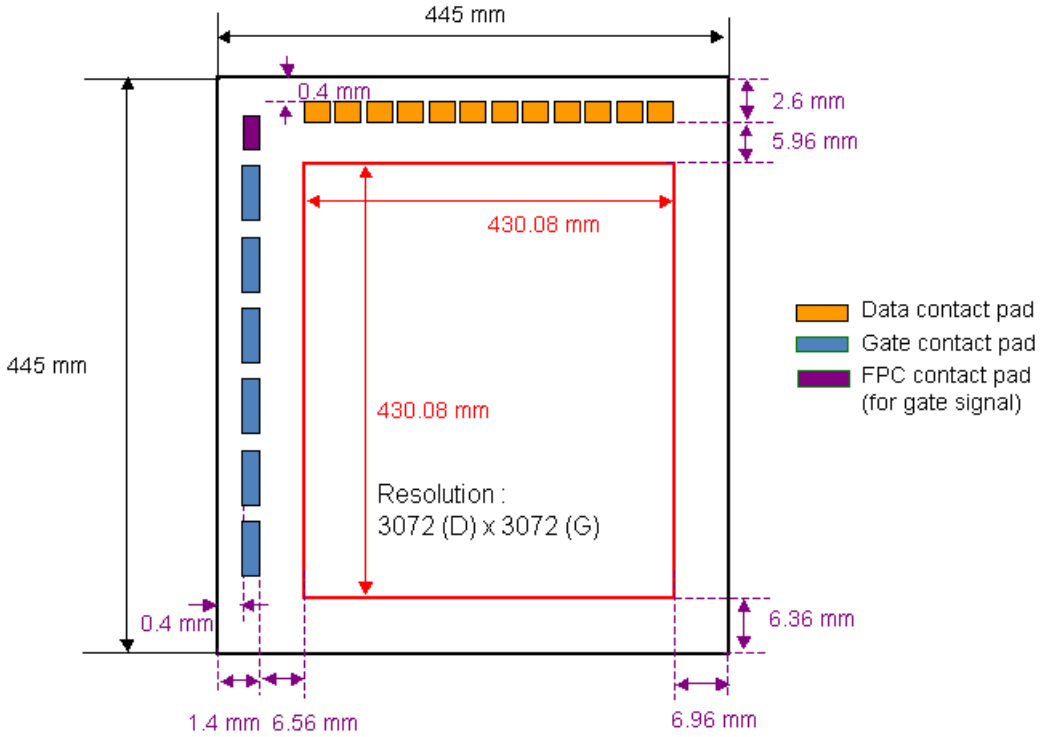

6.0 Mask and Shot on Substrate

6.1 *Mask Set*

17 x 17 Reticle List

Layer No.	Layer Name	Reticle in used			
1	M1	1-1	1-2	1-3	1-4
2	Si1	2-1	2-2	2-3	2-4
3	M2	3-1	3-2	3-3	3-4
4	VIA1	4-1	4-2	4-3	4-4
5	M3	5-1	5-2	5-3	5-4
6	Si2	6-1	6-2	6-3	6-4
7	PFA1	7-1	7-2	7-3	7-4
8	VIA2	8-1	8-2	8-3	8-4
9	M4	9-1	9-2	9-3	9-4
10	ITO1	10-1	10-2	10-3	10-4
11	VIA3	11-1	11-2	11-3	
12	PFA2	12-1	12-2	12-3	

total 46 reticles

6.2 *Shot Arrangement*

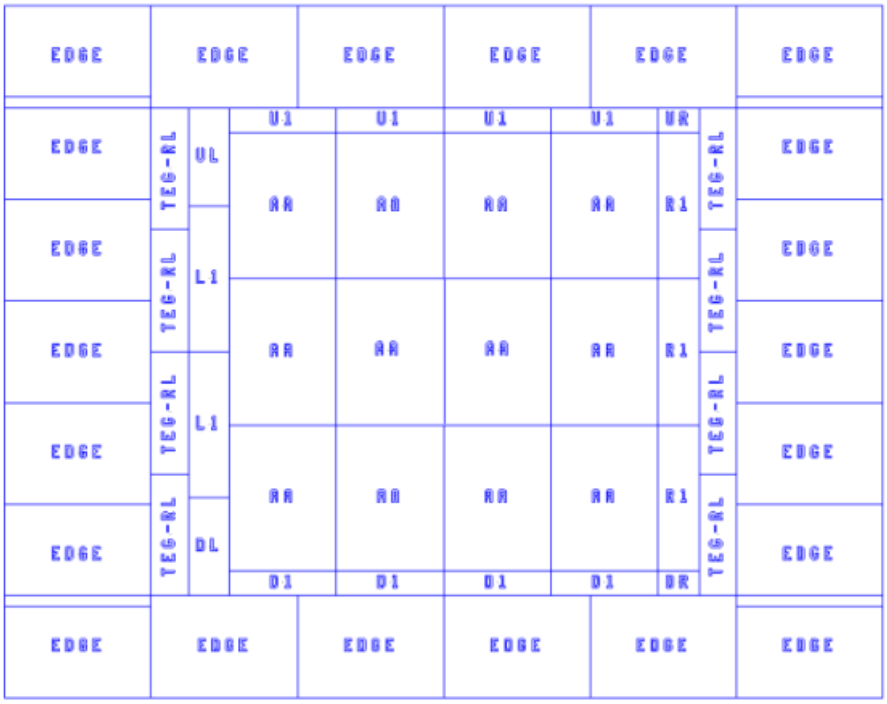

Shot List :

AA : 12

EDGE : 22

TEG-RL : 8

U1 : 4

D1 : 4

R1 : 3

L1 : 2

UL : 1

DL : 1

UR : 1

DR : 1

Total 59 shots

7.0 Electrical Diagram

Bias line is provided from read-out side, and inner short ring is short to VGL from gate side.

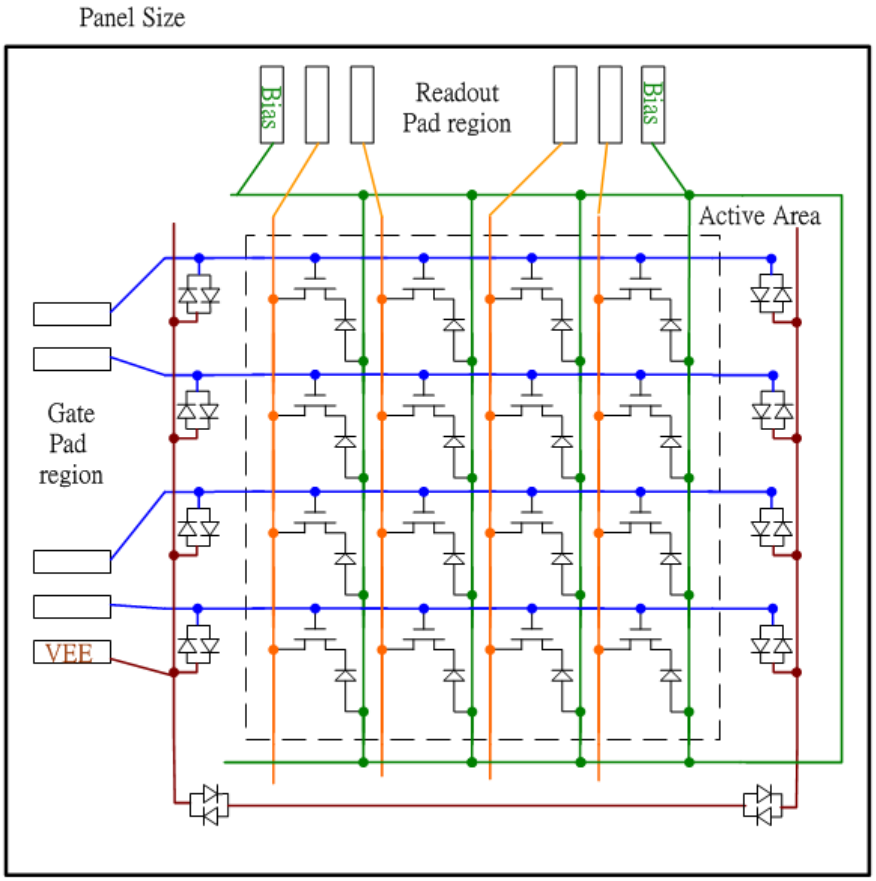

7.1 *Electrical Input Range*

Electrical Inputs	Unit	Min.	Typ.	Max.
Gate-on Voltage (VGH)	V	5	15	23
Gate-off Voltage (VGL)	V	-12	-5	-3
Photodiode Bias Voltage	V	-10	-5	-3

8.0 CD and OL SPECIFICATION

CD measurement is 12 points/sheet for each layer in the active pixel area, OL measurement is also 12 points/sheet for each layer. The sampling condition is 5 sheets/lot for ADI, and 2 sheets/lot for AEI and OL.

8.1 *CD Specification & Measurement Position*

CD specification is ±0.8 um for average and ±1.5 um for a single point.

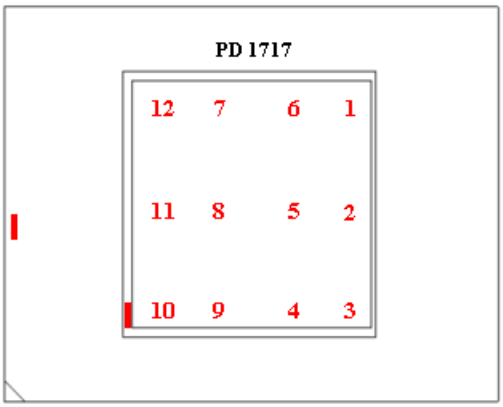

8.2 *OL Specification & Measurement Position*

Layer		OL
		OL Single Position OOS
1	Gate	< 1.5
2	ASI	
3	SD	
4	VIA1	
5	M3	
6	PD	
7	PFA1	
8	VIA2	
9	M4	
10	ITO1	
11	PFA2	
12	VIA3	

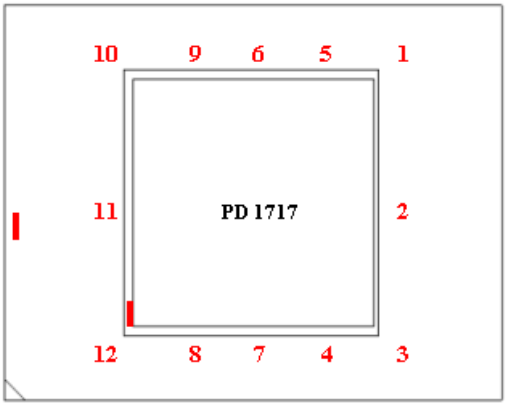

9.0 TEG SPECIFICATION

22 items are included in TEG test, and sampling rate are 2 points/sheet and 2 sheets/lot.

9.1 Parameter and Condition

Parameter		Test Condition		SPEC
		Vgs (V)	Vds (V)	
TFT Characteristic	Vth	6, 7, 8	10	1.5 ± 1 V
	Mobility	6, 7, 8	10	> 0.3
	Ron	15	0.5	< 3.5 MΩ
	Ioff	-5	0.5	< 50 fA
Resistance	Rs_M1	L / W = 20000 / 10		< 0.16 Ω/□
	Rs_M2	L / W = 20000 / 10		< 0.07 Ω/□
	Rs_M3	L / W = 20000 / 10		< 0.25 Ω/□
	Rs_M4	L / W = 20000 / 10		< 0.25 Ω/□
	Rs_ITO	L / W = 20000 / 10		< 100 Ω/□
Contact Resistance	Rc_M1_M3	N = 100, Vm = 0.3*		< 1.0 Ω
	Rc_M2_M3	N = 100, Vm = 0.3		< 1.0 Ω
	Rc_M2_M4	N = 100, Vm = 0.3		< 1.0 Ω
	Rc_M3_M4	N = 100, Vm = 0.3		< 1.0 Ω
	Rc_PD_M4	N = 100, Vm = 0.3		< 100 Ω
	Rc_M4_ITO	N = 100, Vm = 0.3		< 100 Ω
Capacitance	G-SiNx	100 KHz, +20 V, (1mm^2)		1.80E-10 ± 15 %
	G-SiNx/a-Si	100 KHz, -20 V, (1mm^2)		1.44E-10 ± 15 %
	PV1	100 KHz, +20 V, (1mm^2)		2.27E-10 ± 15 %
	PV2	100 KHz, +20 V, (1mm^2)		2.27E-10 ± 15 %
	PV2/PFA1	100 KHz, +20 V, (1mm^2)		1.42E-11 ± 15 %
	PD	100 KHz, -20 V, (1mm^2)		1.08E-10 ± 15 %
Diode Characteristic	PD dark current (1mm^2)	Vd = -5 V,		< 7.5 pA
	PD dark current (per pixel)	Vd = -5 V,		< 100 fA

* Vm is the voltage applying on the two pads of TEG.

9.2 *Measurement Position*

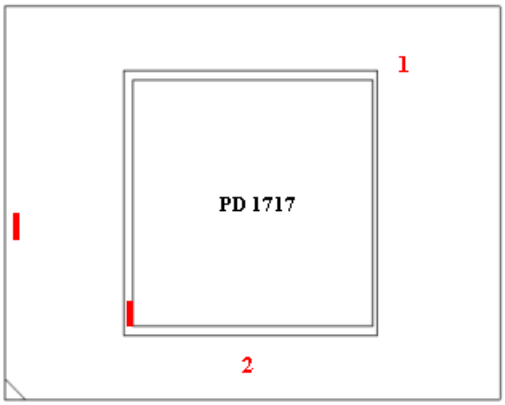

10.0 ATST SPECIFICATION

All TFT array panels would be done by the probe test for electrical properties. All point and line defects in the array are identified by the probe test. The probe test measures the charge of the pixels storage capacitors through TFT under dark environment.

10.1 *Defect Definitions*

Point defect : A point is a point defect when it's charge value is 30% higher or less than average value.

Line defect : A defectiver lines is a row or column that contains more than 5% defective pixels. Pixels on this line will not be included in the defective cluster count.

10.2 *Defects Specifications*

Global level	**Allowable Max**
Total defect pixels (other than line defects)	1000
Cluster more than 5x5 pixels	0
Gate line open	5
Data line open	5
Gap between two gate or data line	16
Line shorts	0

11.0 Visual Inspection & AOI Inspection

All TFT arrays are visually inspected. The visual inspection includes an inspection of the array against a white light to identify gross defects such as:

- The breach angle of glass is not over 90 degree and do not damage the mark on glass edge.

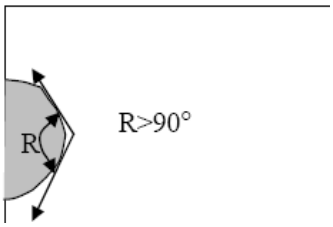

- No scratches and cracks on active area and bonding pad.
- No surface debris and contamination on active area and bonding pad.
- No missing material and metal residue on TFT array.

12.0 ENVIRONMENTAL SPECIFICATION

The environmental specification includes acceptable ranges of temperature and humidity and a description of electrostatic discharge (ESD) protection requirements.

12.1 *TEMPERATURE*

Operation	+10°C to +40°C
Storage	–20°C to +50°C
Rate of change	1°C / minute

12.2 *RELATIVE HUMIDITY*

Operation	15% to 90%
Storage	5% to 95%

12.3 *ELECTROSTATIC DISCHARGE SENSITIVITY*

This device is sensitive to electrostatic discharge (ESD). Handling this device requires adoption of a general ESD control program according to *099-JESD625-A, SCD, Requirements for Handling Electrostatic-Discharge-Sensitive (ESDS) Devices.* The specification target is HBM class 1B (Voltage range > 500 but <1000V, as described in *ANSI/ESD STM5.1-2001*).

The fundamentals are as follows:

- ESD protective work surface
- ESD protective floor mats
- Wrist straps
- ESD protective smocks
- Air ionizers
- Removal of static generating sources from ESD protected areas
- ESD protected handling and packaging materials (antistatic-containers)
- ESD protected area identification (warning signs and labels)
- ESD protection level monitoring (surface resistance, static fields, wrist monitors)
- ESD audits

Workstations must also include, or be in, the presence of airflow ionizers, ensuring that arrays will be in the presence of ionized airflow for a period of one minute before and after transferring arrays between workstations.

13.0 PRODUCT IDENTIFICATION AND PACKAGE

13.1 *ARRAY IDENTIFICATION*

Each array is identified by a unique serial plate number with laser mark on the face of the glass. Any container used for handling and shipping, as well as any deliverable test data or documentation, bears the same serial number.

13.2 *ARRAY TEST DOCUMENTATION*

Test documentation for each array includes flat field images, a defect map, and a summary test report.

13.3 *ARRAY PACKAGING*

Product is shipped by the size 445 mm x 445 mm.

Each array is shipped in a molded carrier designed to help protect the array from electrostatic discharge (ESD) and mechanical shock. Antistatic foam and box surround the immediate carrier.

Each array is shipped with the test documentation listed above.

Packing method.

(1) Carton Packing should have no failure in the following reliability test items

Test Item	Test Conditions	Note
Packing Vibration	ISTA STANDARD Random, Frequency Range: 1 – 200 Hz Top & Bottom: 30 minutes (+Z), 10 min (-Z), Right & Left: 10 minutes (X) Back & Forth 10 minutes (Y)	Non Operation

(2) Packing drawing

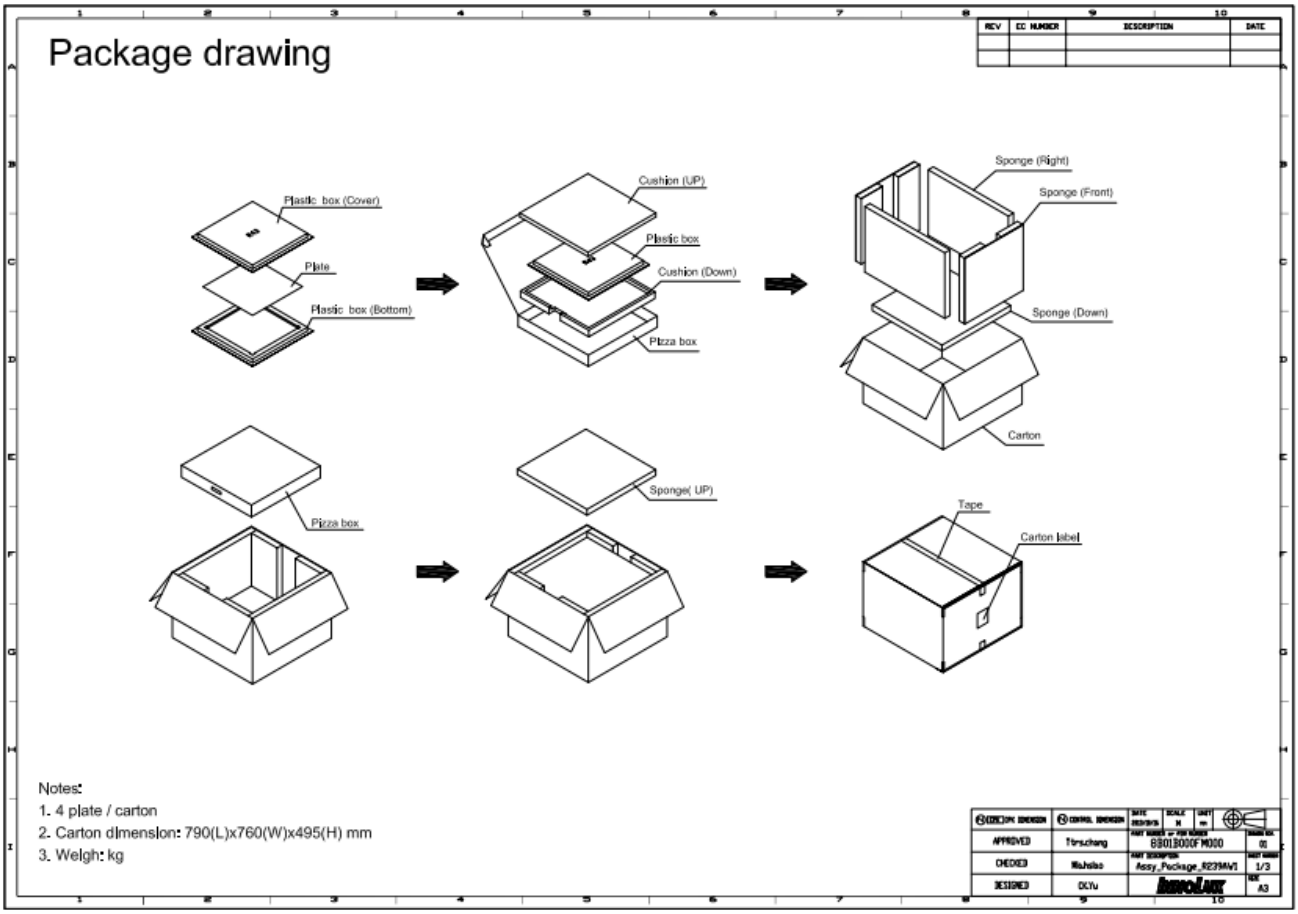

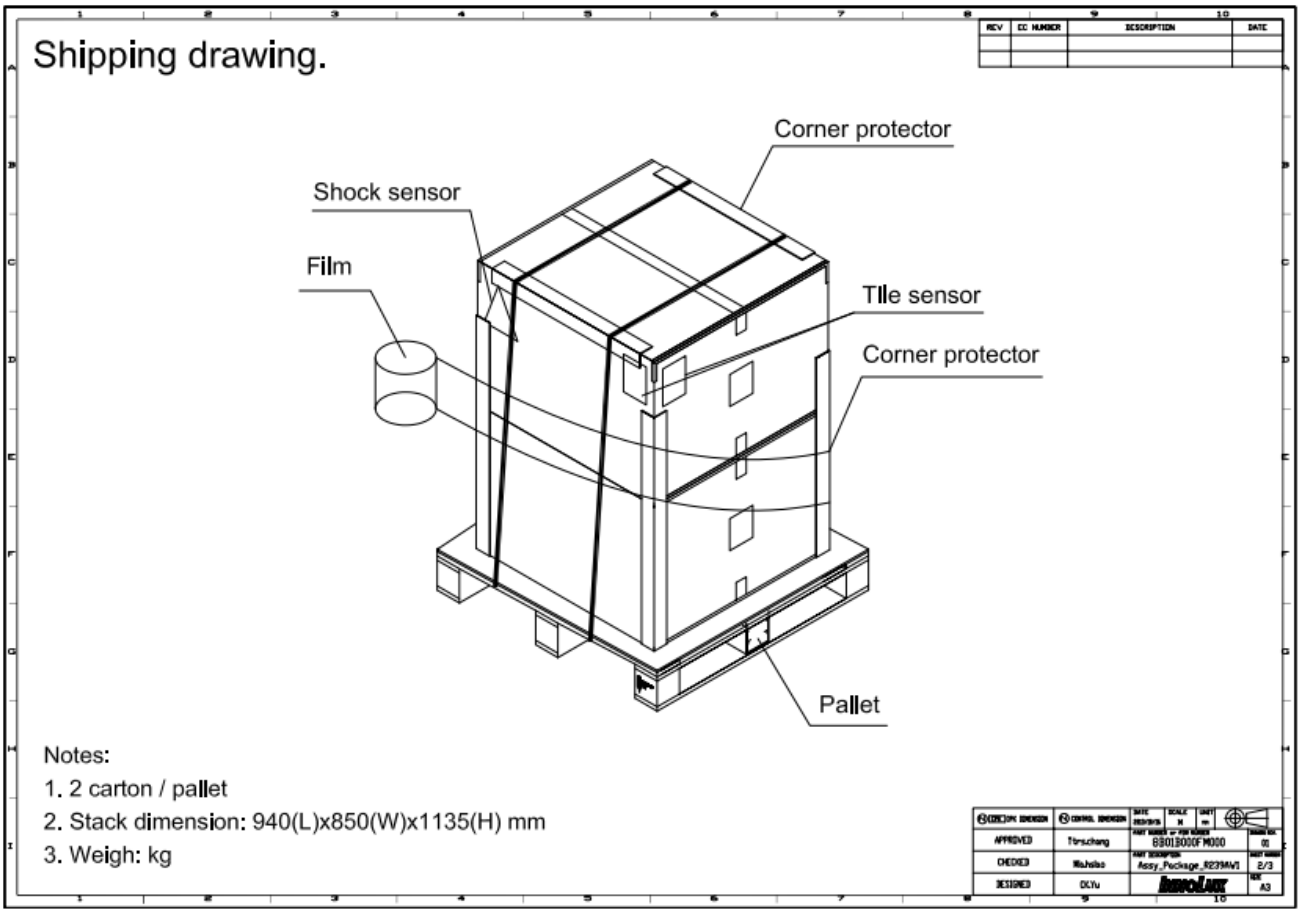

Air transportation