AFE2256
Charge Injection Compensation

Charge Injection from TFT

- The Gate-line to Data-line capacitance (inside panel) causes charge injection during Gate switching operation.
- This charge must be handled by the readout IC (ROIC)
- To avoid saturation due to TFT charge injection, the AFE2256 supports two techniques
  - Traditional method to add offset
  - Charge injection compensation

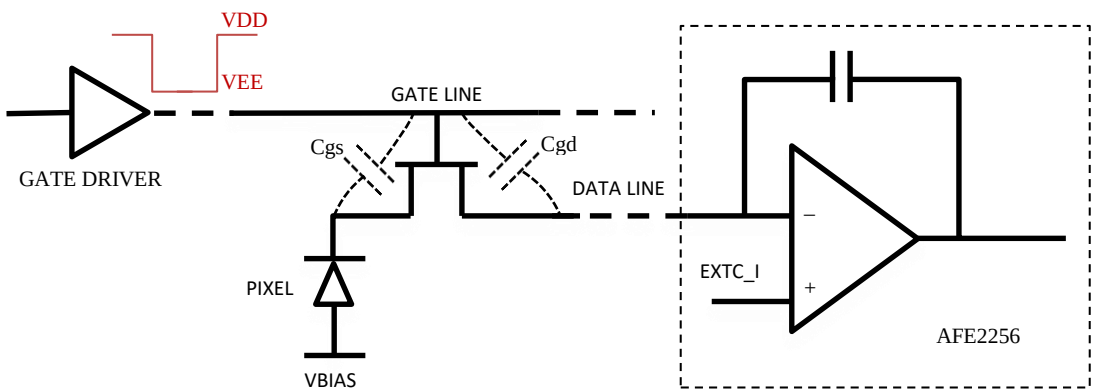

Traditional method to add offset charge

- Traditional approach is to add **offset** so that the gate-on charge injection does not saturate the ROIC.
- However, this technique reduces the dynamic range.
- Example –
  - Consider Input Charge Range (QR) = 4.8pC
  - Magnitude of TFT charge injection (QTFT) during turn-ON/OFF = 2pC
  - Variation in charge injection across panel (Qv) = 0.4 pC (20% variation in TFT parameters)

  Then, considering mismatch the equivalent offset charge to be added = QTFT + Qv = 2.4pC.

  Hence, 50% dynamic range is lost if traditional method is used.
- The loss of dynamic range can be reduced by operating at higher charge range (say QR = 9.6pC) but it may degrade system's input refereed noise

Charge Injection Compensation

- In this technique, AFE2256 compensates for most of charge from TFT switching.
- For example, AFE2256 can cancel charge QTFT = 2pC.
- For simple cases, Qv will not cause much reduction in dynamic range, hence need not be compensated. However, if needed, AFE2256 can compensate Qv using dynamic profile switching.
- Hence, with charge injection compensation, the usable dynamic range will be ~ 4.4pC.
- Therefore approx. 92% of total charge range can be used; against only 50% useful range in traditional method.

How Charge Compensation Works?

During DF_SMx_RISE, one terminal of capacitor C[x] switches from COMP1 to COMP2. This will inject charge (Q_i) given by

$$Q_i = C[x] * (V_{COMP2} - V_{COMP1})$$

Similarly, on DF_SMx_FALL, the charge (–Qi) will be injected.

Example: For Qi = 2 pC

- select C[3] = 0.9 pF, VCOMP1 = 2.2V and VCOMP2 = 0V
- ENB_DFTV_ALL = 1
- DF_SM3_RISE = Gate_ON, DF_SM3_FALL = Gate_OFF

Here, Gate-ON and Gate-OFF are locations of TFT gate ON and OFF respectively.

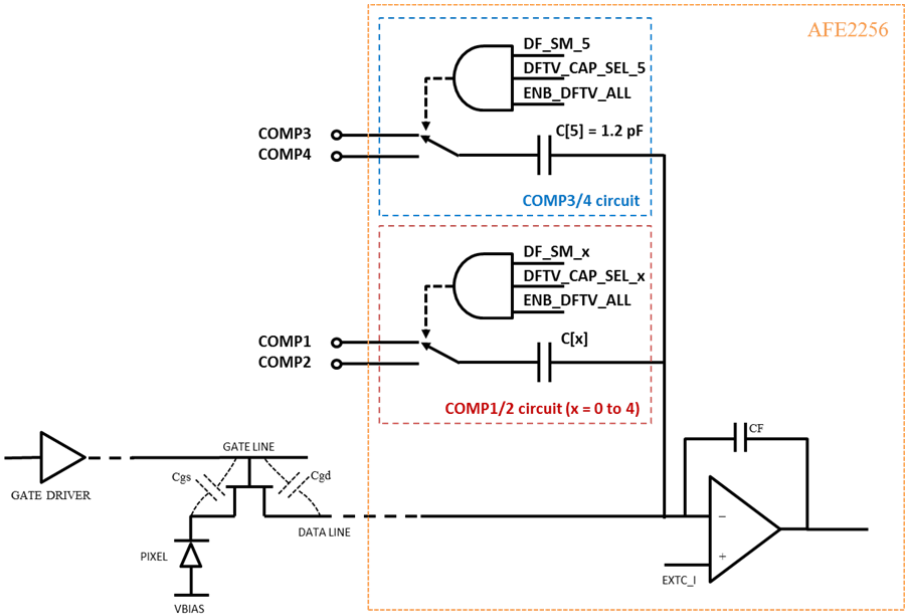

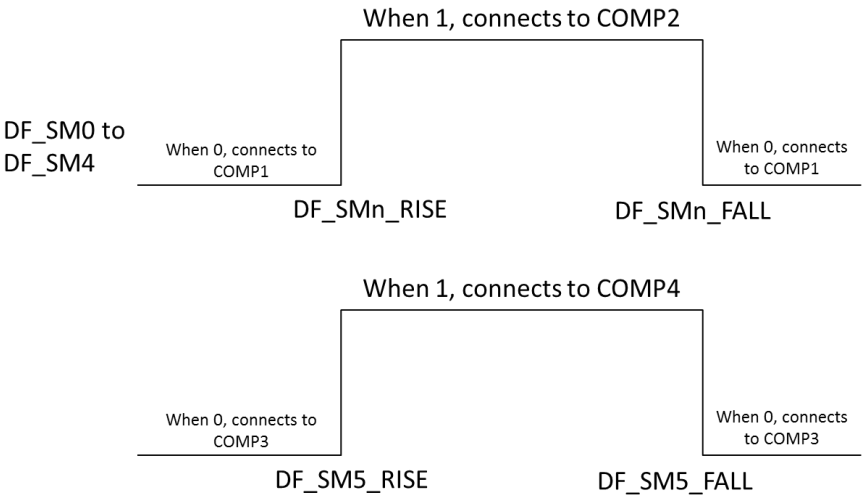

R-C values for COMPx pins

Consider, 2pC charge compensate using COMP1 circuit

- Set Vcomp 1 = 2.2V
- Select C[x] = 0.9 pF (internal to device)
- Select R5 = R4 = {200ns / (256*C[x])} ≈ 870 ohm
  - The min. time constant on formed by C[x] * R2 must be > 200 ns
- Set C2 = 10 nF, R6 = 10 ohm

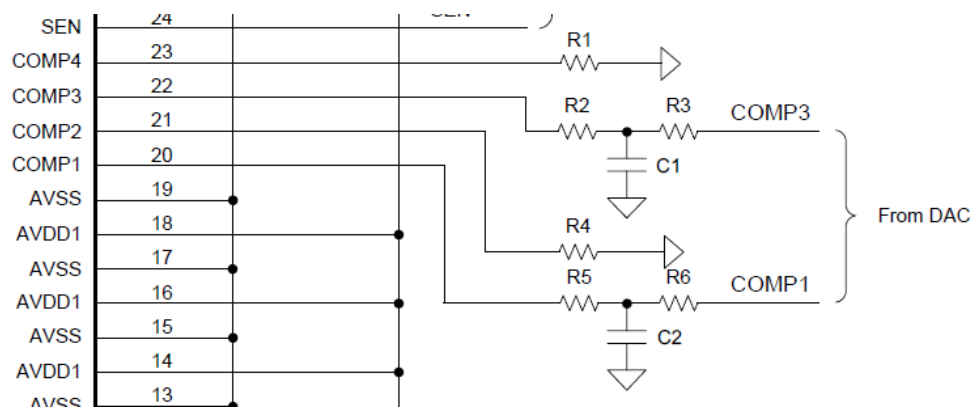

COMPx pin functions

- COMP1 will be connected to low-noise programmable DC voltage
  - COMP1 voltage is decided by maximum gate charge injection.
  - It need not change during the system's operation. For given panel design, it could be a fixed value.
- COMP3 has additional functions.
  - When device is in power-down mode, the COMP3 voltage can keep dataline biased to approx. EXTC_I voltage (875 mV). This avoids dataline discharge during power down. It reduces time to acquire first stable image after power-up. To use this feature, COMP3 voltage must be 875 mV.
  - If COMP3 is not used, the device can be in NAP mode instead of power-down mode. In NAP mode, the device uses internal voltage to bias the dataline. COMP3 voltage is not needed. NAP mode has slightly higher power dissipation compared to power-down mode.
  - COMP3 can also be used for panel-test (without x-ray exposure). It can be used for debug/diagnostics purpose.
- COMP2 and COMP4 can be connected to ground via resistor (as calculated in previous slide)

THANK YOU