AFE2256TDU 256-Channel, Analog Front-End for Digital X-Ray, Flat-Panel Detectors

1 Features

- 256 Channels
- On-Chip, 16-Bit ADC
- Photodiode Short Immunity
- High Performance:
  - Noise: 240 Electrons RMS (0.6-pC Input Charge Range)
  - Noise: 750 Electrons RMS (1.2-pC Input Charge Range)
  - Low Correlated Noise
  - Integral Nonlinearity: ±2 LSB with Internal 16-Bit ADC
  - Scan Time:
    - 12.8 µs to 204.8 µs
- Integration:
  - Six Selectable, Full-Scale Input Ranges: 0.6 pC (Min) to 9.6 pC (Max)
  - Internal Timing Generator (TG)
  - Built-In Correlated Double Sampler
  - Pipelined Integrate and Read for Improved Throughput: Allows Data Read During Integration
  - Serial LVDS Output
- Simple Power-Supply Scheme:
  - AVDD1 = 1.85 V
  - AVDD2 = 3.3 V
- Low Power Consumption
- Nap and Total Power-Down Mode
- Custom Chip-On-Film (COF) Packages

2 Applications

- Flat-Panel, X-Ray Detectors
- Charge Detectors
- Capacitance Measurement

3 Description

The AFE2256 is a 256-channel, analog front-end (AFE) designed to suit the requirements of flat-panel detector (FPD)-based digital x-ray systems. The device includes 256 integrators, a programmable gain amplifier (PGA) for full-scale charge level selection, a correlated double sampler (CDS) with dual banking, and 256:4 analog multiplexers.

The device also features four 16-bit successive-approximation register (SAR) analog-to-digital converters (ADCs). Serial data from the ADCs are available in low-voltage differential signaling (LVDS) format.

The Nap and power-down modes enable substantial power saving that is especially useful in battery-powered systems.

Device Information(1)

PART NUMBER	PACKAGE	BODY SIZE (NOM)
AFE2256TDU	COF (320)	38.00 mm × 28.00 mm

(1) For all available packages, see the orderable addendum at the end of the data sheet.

AFE2256 Schematic

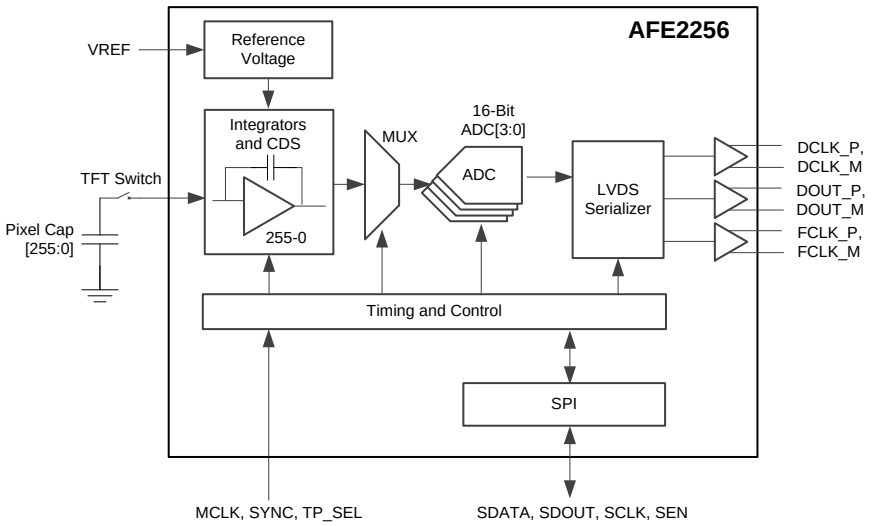

An IMPORTANT NOTICE at the end of this data sheet addresses availability, warranty, changes, use in safety-critical applications, intellectual property matters and other important disclaimers. PRODUCTION DATA.

Table of Contents

1 Features ... 1
2 Applications ... 1
3 Description ... 1
4 Revision History ... 2
5 Pin Configuration and Functions ... 3
6 Specifications ... 5
6.1 Absolute Maximum Ratings ... 5
6.2 ESD Ratings ... 5
6.3 Recommended Operating Conditions ... 5
6.4 Thermal Information ... 5
6.5 Electrical Characteristics ... 6
6.6 Timing Requirements ... 8
6.7 Typical Characteristics ... 10
7 Detailed Description ... 13
7.1 Overview ... 13
7.2 Functional Block Diagram ... 15
7.3 Feature Description ... 16
7.4 Device Functional Modes ... 30
7.5 Programming ... 32
7.6 Register Map ... 35
8 Application and Implementation ... 50
8.1 Application Information ... 50
8.2 Typical Application ... 60
8.3 System Examples ... 63
9 Power Supply Recommendations ... 65
10 Layout ... 65
10.1 Layout Guidelines ... 65
10.2 Layout Examples ... 66
11 Device and Documentation Support ... 68
11.1 Documentation Support ... 68
11.2 Trademarks ... 68
11.3 Electrostatic Discharge Caution ... 68
11.4 Glossary ... 68
12 Mechanical, Packaging, and Orderable Information ... 68
12.1 Package Drawing ... 68
12.2 Tray Dimensions ... 70
12.3 Package Option Addendum ... 71

4 Revision History

Changes from Original (August 2015) to Revision A	Page
• Changed device name to AFE2256TDU where applicable throughout document	1
• Changed specifications in first row of *Absolute Maximum Ratings* table	5
• Changed minimum and maximum specification values for AVDD2 row of *Recommended Operating Conditions* table	5
• Changed maximum specifications for *COMP1, COMP2* and *COMP3, COMP4* parameters in *Recommended Operating Conditions* table	5
• Changed Power Supply Requirements, *Power-supply voltage* AVDD2 parameter minimum and maximum specifications in *Electrical Characteristics* table	7
• Changed conditions of *Timing Requirements* section	8
• Changed conditions of Figure 4	10

Copyright © 2015, Texas Instruments Incorporated

5 Pin Configuration and Functions

TDU Package
320-Pad COF
Top View

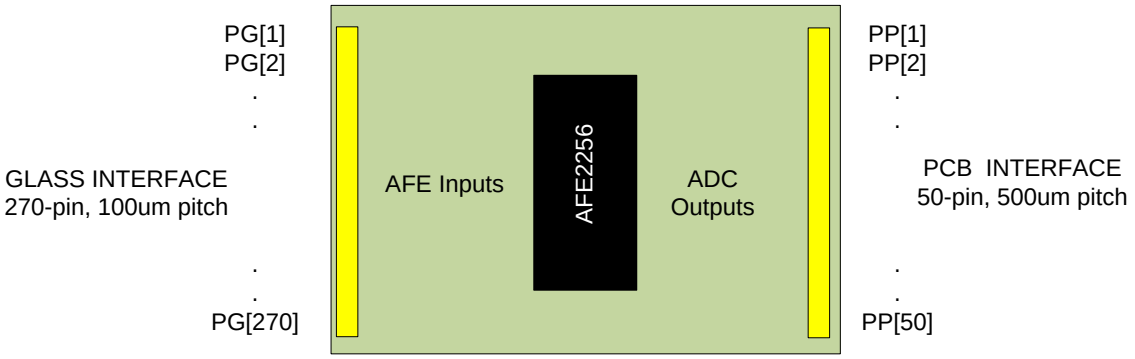

Pin Functions: Glass Interface(1)

COF PAD		NO. OF PADS	I/O	DESCRIPTION	GLASS CONNECTION
NO.	NAME				
PG[1]	FLOAT1	1	I/O	Not connected	N/A
PG[2]	FLOAT2	1	I/O	Not connected	N/A
PG[3]	FLOAT3	1	I/O	Not connected	N/A
PG[4:6]	VBIAS	3	I/O	Passthrough connection to PP[1]	Photodiode bias
PG[7]	VB	1	O	Shield trace biased at EXTC_I voltage	Float and route adjacent to IN[0] as a shield
PG[8:263]	IN[255:0]	256	I	Analog input channels	From FPD sensor
PG[264]	VB	1	O	Shield trace biased at EXTC_I voltage	Float and route adjacent to IN[255] as a shield
PG[265:267]	VBIAS	3	I/O	Passthrough connection to PP[50]	Photodiode bias
PG[268]	FLOAT4	1	I/O	Not connected	N/A
PG[269]	FLOAT5	1	I/O	Not connected	N/A
PG[270]	FLOAT6	1	I/O	Not connected	N/A

(1) A = analog, D = digital, I = input, NA = not applicable, O = output.

Pin Functions: PCB Interface(1)

COF PAD		I/O	ANALOG OR DIGITAL	DESCRIPTION	PCB CONNECTION
NO.	NAME				
PP[1]	VBIAS	I/O	Analog	Photodiode bias; passthrough connection to PG[4:6]	Low-noise voltage source
PP[2]	EXTC_I	I	Analog	Input reference for integrator positive terminal	22-µF + 1-µF + 0.1-µF capacitor (preferably X5R-type) to ground plane
PP[3]	AVSS	I	Analog	Analog ground	Ground plane
PP[4]	AVSS	I	Analog	Analog ground	Ground plane
PP[5]	AVDD1	I	Analog	Analog supply	1.85 V
PP[6]	AVDD2	I	Analog	Analog supply	3.3 V
PP[7]	AVSS	I	Analog	Analog ground	Ground plane
PP[8]	AVSS	I	Analog	Analog ground	Ground plane
PP[9]	AVSS	I	Analog	Analog ground	Ground plane
PP[10]	AVDD1	I	Analog	Analog supply	1.85 V
PP[11]	AVSS	I	Analog	Analog ground	Ground plane
PP[12]	AVDD1	I	Analog	Analog supply	1.85 V
PP[13]	AVSS	I	Analog	Analog ground	Ground plane

(1) A = analog, D = digital, I = input, NA = not applicable, O = output.

Copyright © 2015, Texas Instruments Incorporated

Pin Functions: PCB Interface[1] (continued)

COF PAD		I/O	ANALOG OR DIGITAL	DESCRIPTION	PCB CONNECTION
NO.	NAME				
PP[14]	DOUTP	O	Digital	Low-voltage differential signaling (LVDS) data output	To field-programmable gate array (FPGA)
PP[15]	DOUTM	O	Digital	LVDS data output	To FPGA
PP[16]	FCLKP	O	Digital	LVDS frame clock	To FPGA
PP[17]	FCLKM	O	Digital	LVDS frame clock	To FPGA
PP[18]	DCLKP	O	Digital	LVDS data clock	To FPGA
PP[19]	DCLKM	O	Digital	LVDS data clock	To FPGA
PP[20]	AVSS	I	Analog	Analog ground	Ground plane
PP[21]	AVDD1	I	Analog	Analog supply	1.85 V
PP[22]	AVDD1	I	Analog	Analog supply	1.85 V
PP[23]	MCLK	I	Digital	Master clock input	From FPGA
PP[24]	SYNC	I	Digital	Synchronization pulse input	From FPGA
PP[25]	TP_SEL	I	Digital	Timing profile selection	From FPGA
PP[26]	SDOUT	O	Digital	Serial interface data output	To FPGA
PP[27]	SCLK	I	Digital	Serial interface clock input	From FPGA
PP[28]	SDATA	I	Digital	Serial interface data input	From FPGA
PP[29]	SEN	I	Digital	Serial interface enable	From FPGA
PP[30]	COMP4	I	Analog	Analog input for TFT charge compensation	Output of low-noise digital-to-analog converters (DACs). These pins can be connected to the ground plane if not used.
PP[31]	COMP3	I	Analog		
PP[32]	COMP2	I	Analog		
PP[33]	COMP1	I	Analog		
PP[34]	AVSS	I	Analog	Analog ground	Ground plane
PP[35]	AVDD1	I	Analog	Analog supply	1.85 V
PP[36]	AVSS	I	Analog	Analog ground	Ground plane
PP[37]	AVDD1	I	Analog	Analog supply	1.85 V
PP[38]	AVSS	I	Analog	Analog ground	Ground plane
PP[39]	AVDD1	I	Analog	Analog supply	1.85 V
PP[40]	AVSS	I	Analog	Analog ground	Ground plane
PP[41]	VREF	I	Analog	Reference voltage	Low-noise 1.25-V reference
PP[42]	EXTC_O	O	Analog	Output reference for integrator positive terminal	Short to EXTC_I
PP[43]	VTESTC	O	Analog	Probe pad	Test point
PP[44]	AVSS	I	Analog	Analog ground	Ground plane
PP[45]	AVDD2	I	Analog	Analog supply	3.3 V
PP[46]	AVDD1	I	Analog	Analog supply	1.85 V
PP[47]	AVSS	I	Analog	Analog ground	Ground plane
PP[48]	AVSS	I	Analog	Analog ground	Ground plane
PP[49]	EXTC_I	I	Analog	Input reference for integrator positive terminal	Short to EXTC_O and place a 22-µF + 1-µF + 0.1-µF capacitor (preferably X5R-type) to ground plane
PP[50]	VBIAS	I/O	Analog	Photodiode bias; passthrough connection to PG[265:267]	Low-noise voltage source

Copyright © 2015, Texas Instruments Incorporated

6 Specifications

6.1 Absolute Maximum Ratings

over operating free-air temperature range (unless otherwise noted)[1]

	MIN	MAX	UNIT
IN[n] to AGND, AVDD1	–100	20	mA
AVDD1 to AGND	–0.3	2.2	V
AVDD2 to AGND	–0.3	5.5	V
COMP1 and COMP2 to AGND	–0.3	AVDD2 + 0.3	V
COMP3 and COMP4 to AGND	–0.3	AVDD1 + 0.3	V
Digital input voltage to AGND	–0.3	AVDD1 + 0.3	V
Digital output to AGND	–0.3	AVDD1 + 0.3	V
Operating temperature	0	85	°C
Junction temperature, T_{Jmax}		150	°C
Storage temperature, T_{stg}	–65	125	°C

(1) Stresses beyond those listed under *Absolute Maximum Ratings* may cause permanent damage to the device. These are stress ratings only, which do not imply functional operation of the device at these or any other conditions beyond those indicated under *Recommended Operating Conditions*. Exposure to absolute-maximum-rated conditions for extended periods may affect device reliability.

6.2 ESD Ratings

			VALUE	UNIT
$V_{(ESD)}$	Electrostatic discharge	Human-body model (HBM), per ANSI/ESDA/JEDEC JS-001[1]	±1000	V

(1) JEDEC document JEP155 states that 500-V HBM allows safe manufacturing with a standard ESD control process.

6.3 Recommended Operating Conditions

over operating free-air temperature range (unless otherwise noted)

		MIN	NOM	MAX	UNIT
T_A	Ambient temperature	0		85	°C
AVDD1	Analog supply voltage1	1.8	1.85	1.95	V
AVDD2	Analog supply voltage2	3.3 – 5%	3.3	3.3 + 5%	V
VREF	Reference voltage	1.24	1.25	1.26	V
COMP1, COMP2	Charge injection compensation inputs 1 and 2	0		3.3	V
COMP3, COMP4	Charge injection compensation inputs 3 and 4	0		1.85	V

6.4 Thermal Information

THERMAL METRIC[1]		AFE2256TDU TDU (COF) 320 PADS	UNIT
$R_{\theta JA}$	Junction-to-ambient thermal resistance	49.9	°C/W
ψ_{JT}	Junction-to-top characterization parameter	0.02	°C/W
ψ_{Jflex}	Junction-to-flex characterization parameter[2]	10.5	°C/W

(1) For more information about traditional and new thermal metrics, see the *Semiconductor and IC Package Thermal Metrics* application report, SPRA953.
(2) Values are modeled on a flex device attached to 40°C glass plate and a 40°C printed circuit board (PCB), per the standard-use condition. The device is powered at 341 mW.

6.5 Electrical Characteristics

at T_A= 25ºC, AVDD1 = 1.85 V, AVDD2 = 3.3 V, MCLK frequency = 20 MHz, STR = 2, scan time = 51.2 µs, input charge range = 4.8 pC, f_{LPF1} = f_{LPF2} = 52 kHz, and C_{sensor} (1) = 50 pF; all specifications are in normal-power mode, pixel short-detection circuitry enabled, and auto-reverse mode enabled (unless otherwise noted)

PARAMETER		TEST CONDITIONS	MIN	TYP	MAX	UNIT
FULL CHANNEL						
	Input charge range	INPUT_CHARGE_RANGE bits = 00001b		0.6		pC
		INPUT_CHARGE_RANGE bits = 00010b		1.2		
		INPUT_CHARGE_RANGE bits = 00100b		2.4		
		INPUT_CHARGE_RANGE bits = 01000b		4.8		
		INPUT_CHARGE_RANGE bits = 01100b		7.2		
		INPUT_CHARGE_RANGE bits = 11111b		9.6		
	Integrator positive input voltage			0.875		V
	Noise (referred to input of integrator)	Input charge range = 0.6 pC, scan time = 102.4 µs, f_{LPF1} = f_{LPF2} = 13 kHz, C_{sensor} = 20 pF, low-noise mode		240		electrons (e–)
		Input charge range = 1.2 pC, scan time = 51.2 µs, f_{LPF1} = f_{LPF2} = 52 kHz, C_{sensor} = 50 pF, normal-power mode		750		
		Input charge range = 1.2 pC, scan time = 51.2 µs, f_{LPF1} = f_{LPF2} = 52 kHz, C_{sensor} = 50 pF, low-noise mode		620		
		Input charge range = 4.8 pC, scan time = 51.2 µs, f_{LPF1} = f_{LPF2} = 52 kHz, C_{sensor} = 50 pF, normal-power mode		1050		
	Correlated noise	Across 256 channels		10		% of average noise
INL	Integral nonlinearity			±2		LSB (2)
	Analog input channel leakage current	This current is integrated and reflects as a part of offset error		±10		pA
E_G	Gain error	Average gain of 256 channels in an AFE2256 device, input charge range = 9.6 pC	–5		5	% of ideal gain (3)
	Channel to channel gain matching	(Max gain – min gain), within an AFE2256 device, input charge range = 9.6 pC		2		% of average gain
	Offset code	Output code with no input charge		300		LSB
	Crosstalk	Crosstalk to distant channel with 200 aggressor channels overloaded with 5X input charge range		0.02		% of full-scale range
		Crosstalk to distant channel with one aggressor channel overloaded with 5X input charge range		0.01		
EXTERNAL REFERENCE INPUT						
	Reference voltage pin, VREF		1.24	1.25	1.26	V
	Input current from VREF			50		nA
POST INTEGRATION FILTER						
	Number of filter settings			5		
	Filter 3-dB cutoff frequency (f_{LPF1}, f_{LPF2})			210, 105, 52, 26, 13		kHz

(1) C_{sensor} is the total external capacitance at the IN[n] pad, including the capacitance of all the TFT switches connected to that node and the routing capacitance.
(2) LSB = least significant bit.
(3) Ideal gain of a channel is 65535 ÷ (input charge range).

Copyright © 2015, Texas Instruments Incorporated

Electrical Characteristics (continued)

at T_A= 25ºC, AVDD1 = 1.85 V, AVDD2 = 3.3 V, MCLK frequency = 20 MHz, STR = 2, scan time = 51.2 µs, input charge range = 4.8 pC, f_{LPF1} = f_{LPF2} = 52 kHz, and C_{sensor}(1) = 50 pF; all specifications are in normal-power mode, pixel short-detection circuitry enabled, and auto-reverse mode enabled (unless otherwise noted)

PARAMETER		TEST CONDITIONS	MIN	TYP	MAX	UNIT
POWER SUPPLY REQUIREMENTS						
	Power-supply voltage	AVDD1	1.8	1.85	1.95	V
		AVDD2	3.3 – 5%	3.3	3.3 + 5%	
POWER DISSIPATION						
	Power per channel	Normal-power mode, pixel short-detection circuitry disabled (ENB_TDEF = 0)		1.33		mW/ch
		Normal-power mode, pixel short-detection circuitry enabled (ENB_TDEF = 1)		1.42		
		Low-noise mode, pixel short-detection circuitry disabled (ENB_TDEF = 0)		2.14		
		Low-noise mode, pixel short-detection circuitry enabled (ENB_TDEF = 1)		2.23		
		Nap mode, no toggle on digital inputs		21.7		µW/ch
		Power-down (PD) mode, no toggle on digital inputs		0.72		
I_{AVDD1}	AVDD1 power-supply current	Normal-power mode; pixel short-detection circuitry enabled, disabled (ENB_TDEF = 1 or 0)		161		mA
		Low-noise mode; pixel short-detection circuitry enabled, disabled (ENB_TDEF = 1 or 0)		273		
		Nap mode, no toggle on digital inputs		3		
		Power-down (PD) mode, no toggle on digital inputs		0.1		
I_{AVDD2}	AVDD2 power-supply current	Normal-power, low-noise mode; pixel short-detection circuitry disabled (ENB_TDEF = 0)		13		mA
		Normal-power, low-noise mode; pixel short-detection circuitry enabled (ENB_TDEF = 1)		20		
		Nap mode, no toggle on digital inputs		1		µA
		Power-down (PD) mode, no toggle on digital inputs		1		
	Power-up time from Nap	With 47-µF capacitor on EXTC_I		1		ms
	Power-up time from full power-down			30		
DIGITAL INPUT (MCLK, SYNC, TP_SEL, SCLK, SDATA, SEN)						
V_{IH}	High-level input voltage, 1.8-V CMOS logic level		0.8 × AVDD1		AVDD1 + 0.1	V
V_{IL}	Low-level input voltage, 1.8-V CMOS logic level		–0.1		0.2 × AVDD1	V
DIGITAL OUTPUT (SDOUT)						
V_{OH}	High-level output voltage, 1.8-V CMOS logic level	I_{OH} = –500 µA	AVDD1 – 0.4			V
V_{OL}	Low-level output voltage, 1.8-V CMOS logic level	I_{OL} = 500 µA			0.4	V
DIGITAL OUTPUT (DOUT, FCLK, DCLK)						
	Format			LVDS, DDR		
DR	Data rate(4)		30(5)		480(6)	Mbps
	Differential swing	With 100-Ω differential termination		±350		mV
V_{OC}	Common-mode output voltage			1.1		V

(4) See the *Data Serialization* section for more details.
(5) t_{SCAN} = 204.8 µs.
(6) t_{SCAN} = 12.8 µs.

6.6 Timing Requirements

all specifications are at T_A = 0°C to 85°C, AVDD1 = 1.8 V to 1.95 V, AVDD2 = 3.3 V ± 5%, capacitance on SDOUT = 15 pF, capacitance on DOUT, DCLK, FCLK = 5 pF, and LVDS pairs terminated with 100-Ω differential termination (unless otherwise noted)

			MIN	TYP	MAX	UNIT
CONTROL TIMING (see Figure 1)						
t_{SCAN}	Scan time	Scan time range 0	12.8		25.6	µs
		Scan time range 1	25.6		51.2	
		Scan time range 2	51.2		102.4	
		Scan time range 3	102.4		204.8	
t_{SU1}	TP_SEL toggle to SYNC pulse rising edge		0			ns
t_{H1}	SYNC pulse rising edge to TP_SEL toggle		2 × t_{MCLK}			
t_{W1}	SYNC pulse duration		t_{MCLK}			
t_{SU2}	SYNC toggle to MCLK rising edge		0			s
t_{H2}	MCLK rising to SYNC toggle		1/3 × t_{MCLK} + 10			ns
t_{MCLK}	Master clock period (1 / f_{MCLK}): scan time range 0 to 3		50		100	ns
t_{WH}	Master clock high pulse duration		20			ns
t_{WL}	Master clock low pulse duration		20			ns
t_{IRST}	Integrator reset duration					µs
t_{SHR}	Reset sample duration		4 + t_{LPF1}			µs
$t_{SHR-LPF1}$	SHR rising edge to LPF1 rising edge duration		4			µs
t_{SHS}	Signal sample duration		4 + t_{LPF2}			µs
$t_{SHS-LPF2}$	SHS rising edge to LPF2 rising edge duration		4			µs
t_{LPF1}	LPF1 rising edge to SHR fall edge	f_{LPF1} = 210 kHz	0 (1)			µs
		f_{LPF1} = 105 kHz	1.5			
		f_{LPF1} = 52 kHz	9.1			
		f_{LPF1} = 26 kHz	18.2			
		f_{LPF1} = 13 kHz	36.4			
t_{LPF2}	LPF2 rising edge to SHS falling edge	f_{LPF2} = 210 kHz	0 (1)			µs
		f_{LPF2} = 105 kHz	1.5			
		f_{LPF2} = 52 kHz	9.1			
		f_{LPF2} = 26 kHz	18.2			
		f_{LPF2} = 13 kHz	36.4			
t_{TDEF}	TDEF falling edge to LPF2 rising edge		2			µs
DATA READ (see Figure 2)						
t_{DCLK}	DCLK (clock) period (DDR)		4.17		66.67	ns
t_{su3}	DOUT valid to DCLK toggle, setup time: t_{SCAN} = 12.8 µs, LVDS data rate = 480 Mbps (2)		758			ps
t_{su4}	FCLK valid to DCLK toggle, setup time: t_{SCAN} = 12.8 µs, LVDS data rate = 480 Mbps (2)		850			ps
t_{H3}	DCLK toggle to DOUT toggle, hold time: t_{SCAN} = 12.8 µs, LVDS data rate = 480 Mbps (2)		857			ps
t_{H4}	DCLK toggle to FCLK toggle, hold time: t_{SCAN} = 12.8 µs, LVDS data rate = 480 Mbps (2)		815			ps
D_{FCLK}	FCLK duty cycle	STR = 0		33%		
		STR ≠ 0		50%		

(1) The filter settling time for the 210-kHz filter is included in t_{SHR} and t_{SHS}. Do not program the LPF1 and LPF2 timing signals for the 210-kHz filter.

(2) Minimum values are specified at the maximum data rate. DCLK is center-aligned with DOUT and FCLK; thus, at slower speeds, increased bit duration can be equally divided between setup time and hold time to increase the setup and hold margins at slower speeds.

Copyright © 2015, Texas Instruments Incorporated

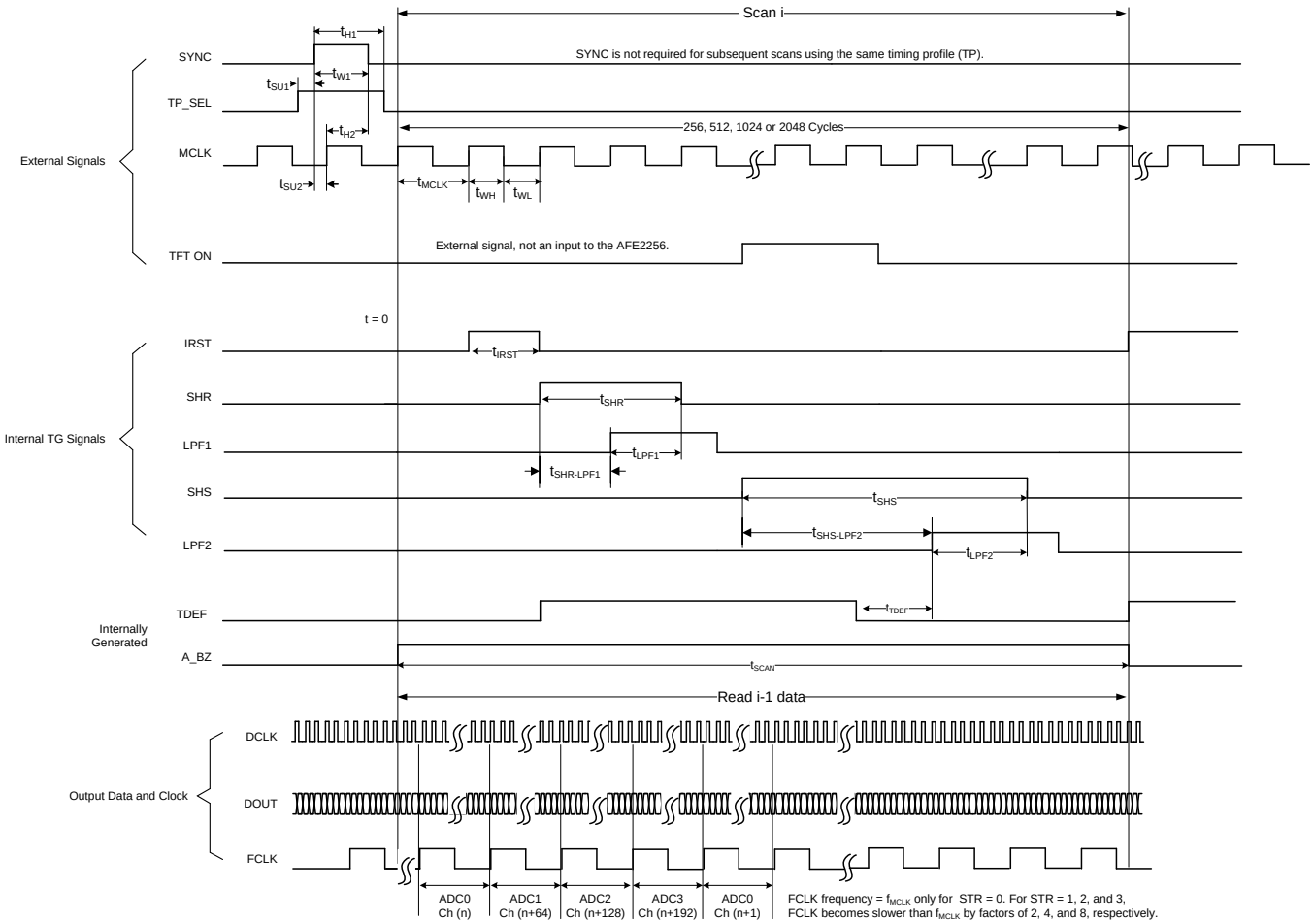

Figure 1. Control Timing Diagram

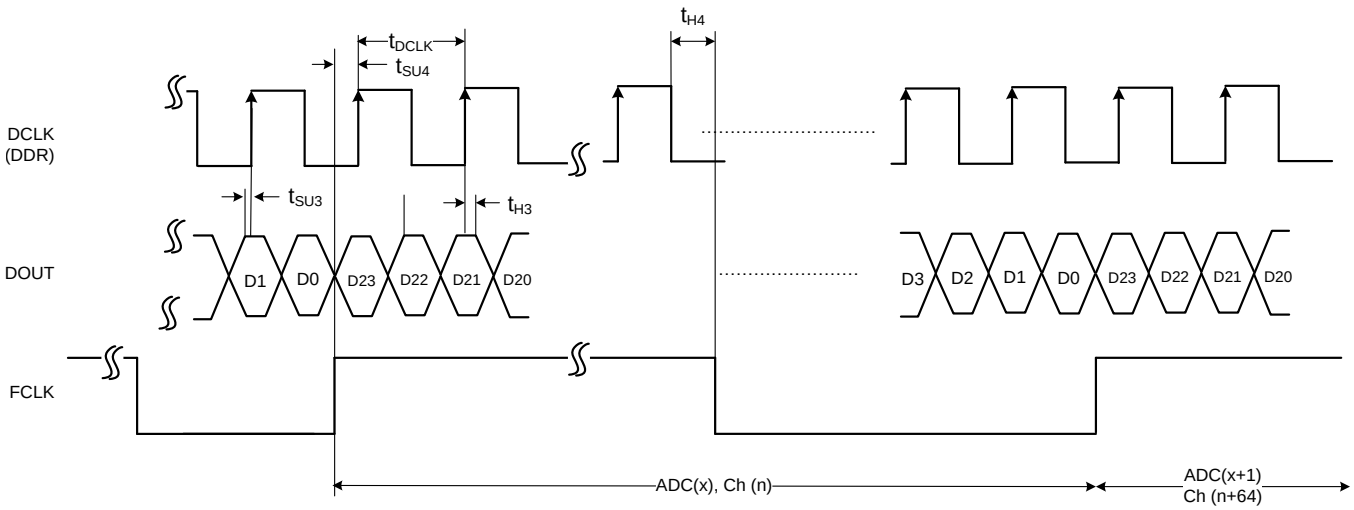

Figure 2. Digital Data Read Timing Diagram

6.7 Typical Characteristics

at T_A = 25ºC, AVDD1 = 1.85 V, AVDD2 = 3.3 V, MCLK frequency = 20 MHz, STR = 2, scan time = 51.2 µs, input charge range = 4.8 pC, f_{LPF1} = f_{LPF2} = 52 kHz, and C_{sensor} = 50 pF; all specifications are in normal-power mode, integrate-up mode, pixel short-detection circuitry enabled, and auto-reverse mode enabled (unless otherwise noted)

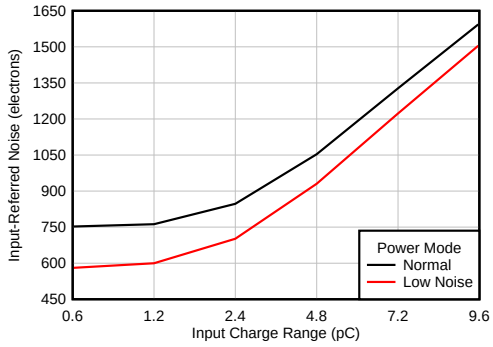

Figure 3. Input-Referred Noise vs Input Charge Range Across Power Modes

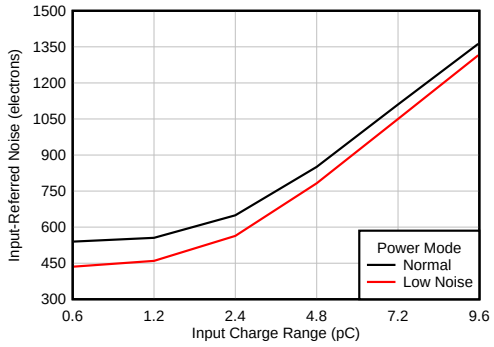

t_{SCAN} = 102.4 µs, STR = 3, f_{LPF1} = f_{LPF2} = 13 kHz

Figure 4. Input-Referred Noise vs Input Charge Range Across Power Modes

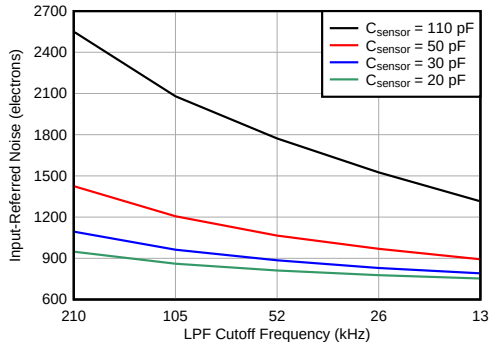

t_{SCAN} = 102.4 µs, STR = 3, normal-power mode, f_{LPF1} = f_{LPF2} = LPF cutoff frequency

Figure 5. Input-Referred Noise vs LPF Cutoff Frequency Across C_{sensor}

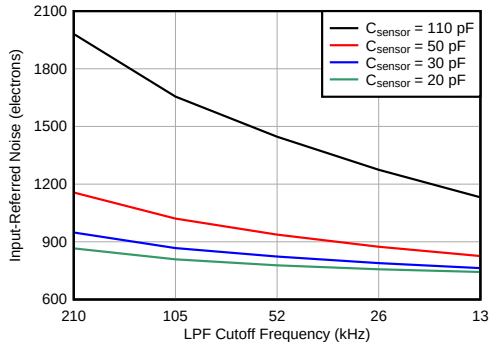

t_{SCAN} = 102.4 µs, STR = 3, low-noise mode, f_{LPF1} = f_{LPF2} = LPF cutoff frequency

Figure 6. Input-Referred Noise vs LPF Cutoff Frequency Across C_{sensor}

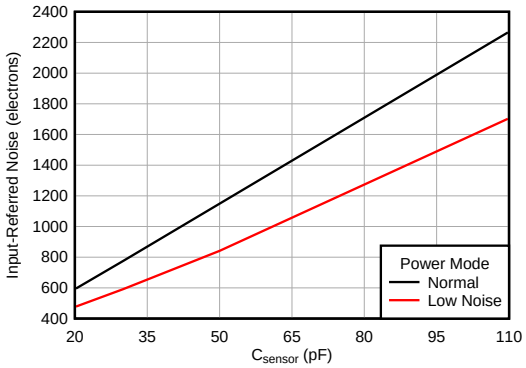

t_{SCAN} = 12.8 µs, STR = 0, input charge range = 0.6 pC, f_{LPF1} = f_{LPF2} = 210 kHz

Figure 7. Input-Referred Noise vs C_{sensor} Across Power Modes

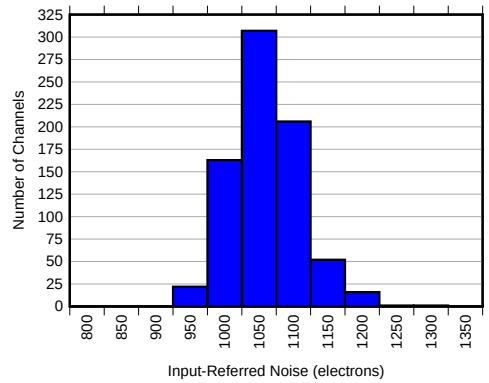

Distribution across 768 channels (3 devices)

Figure 8. Input-Referred Noise Histogram

Copyright © 2015, Texas Instruments Incorporated

Typical Characteristics (continued)

at T_A = 25ºC, AVDD1 = 1.85 V, AVDD2 = 3.3 V, MCLK frequency = 20 MHz, STR = 2, scan time = 51.2 µs, input charge range = 4.8 pC, f_{LPF1} = f_{LPF2} = 52 kHz, and C_{sensor} = 50 pF; all specifications are in normal-power mode, integrate-up mode, pixel short-detection circuitry enabled, and auto-reverse mode enabled (unless otherwise noted)

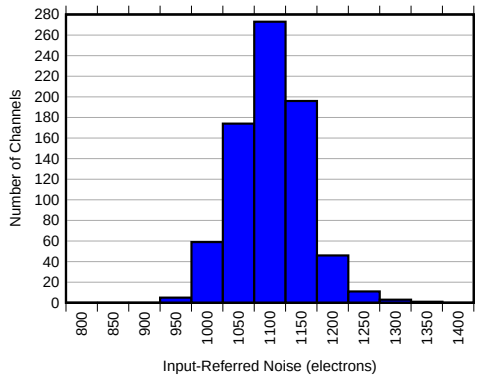

t_{SCAN} = 12.8 µs, STR = 0, input charge range = 0.6 pC, normal-power mode, f_{LPF1} = f_{LPF2} = 210 kHz, distribution across 768 channels (3 devices)

Figure 9. Input-Referred Noise Histogram

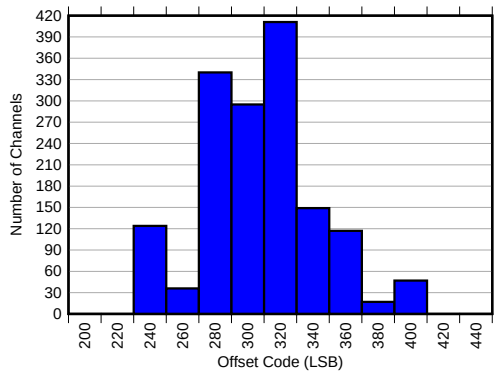

Distribution across 2560 channels (10 devices)

Figure 10. Offset Code Histogram

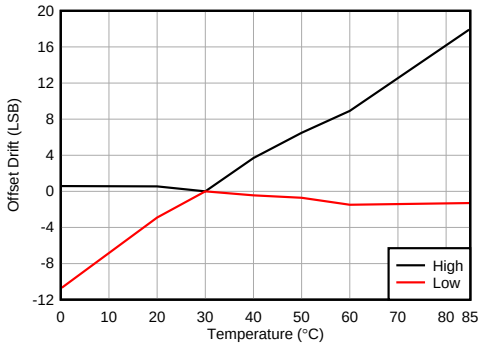

Envelope of offset drift for 1024 channels (4 devices), data are offset corrected at 30°C

Figure 11. Offset Drift vs Temperature

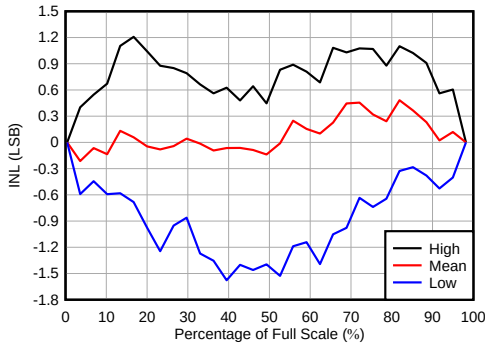

Envelope of INL for 768 channels (3 devices)

Figure 12. Full-Channel INL

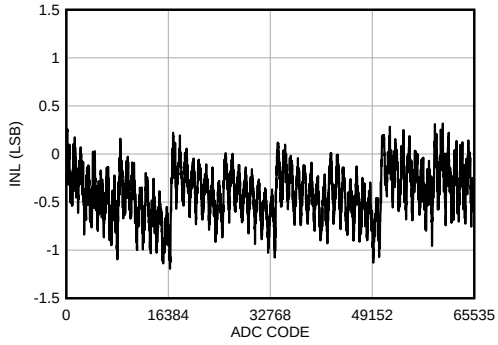

Figure 13. ADC INL

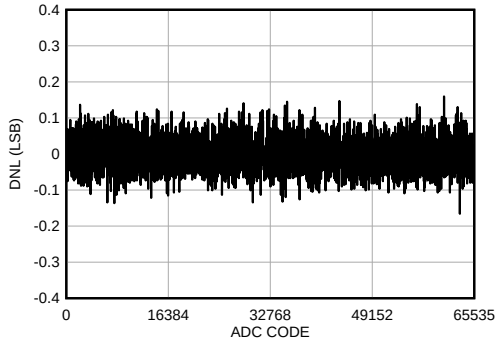

Figure 14. ADC DNL

Typical Characteristics (continued)

at T_A = 25ºC, AVDD1 = 1.85 V, AVDD2 = 3.3 V, MCLK frequency = 20 MHz, STR = 2, scan time = 51.2 µs, input charge range = 4.8 pC, f_{LPF1} = f_{LPF2} = 52 kHz, and C_{sensor} = 50 pF; all specifications are in normal-power mode, integrate-up mode, pixel short-detection circuitry enabled, and auto-reverse mode enabled (unless otherwise noted)

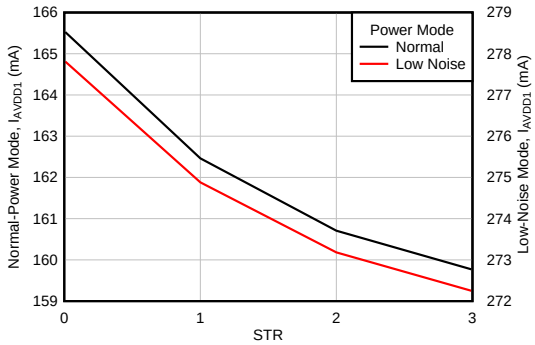

I_{AVDD1} is independent of TDEF setting

Figure 15. I_{AVDD1} vs STR Across Power Modes

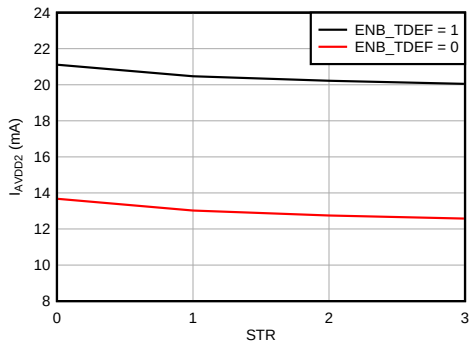

Figure 16. IAVDD2 vs STR Across Pixel Short-Detection Enabled, Disabled

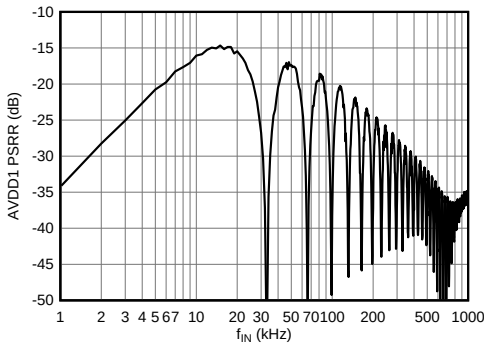

t_{SCAN} = 102.4 µs, STR = 3, SHR_FALL = 101, SHS_FALL = 253, null frequency [(1)] = 32.8 kHz

Figure 17. AVDD1 PSRR vs Input Frequency [(2)]

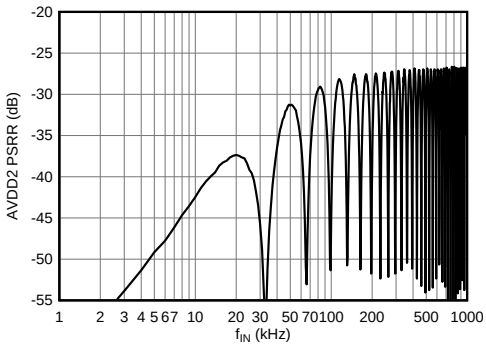

t_{SCAN} = 102.4 µs, STR = 3 SHR_FALL = 101, SHS_FALL = 253, null frequency [(1)] = 32.8 kHz

Figure 18. AVDD2 PSRR vs Input Frequency[(2)]

(1) $$\text{Null frequency} = \frac{1}{2^{STR} \times (\text{SHS_FALL} - \text{SHR_FALL}) \times t_{MCLK}}$$

(2) PSRR is measured for a 50-mV_{PP} tone on the supply.

Copyright © 2015, Texas Instruments Incorporated

7 Detailed Description

7.1 Overview

The AFE2256 performs three main functions in parallel during each scan: charge acquisition, analog-to-digital conversion, and shifting out digital data. These functions are all controlled by the internal timing generator (TG). This section describes the details of charge acquisition, analog-to-digital conversion, the data shift out operation, and the functionality of the timing generator.

The AFE2256 incorporates a high-speed, phase-locked loop (PLL) that locks to MCLK. For successful locking of the PLL, MCLK must be in the 10-MHz to 20-MHz range. The PLL takes approximately 20 µs to lock after applying MCLK; this time must be accounted for in the power-up timing.

If MCLK is stopped, the PLL lock time must be accounted for in the system timing. MCLK is recommended to be free-running so that the PLL is continuously locked.

The timing generator, ADC, and low-voltage differential signaling (LVDS) interface all run on the clocks generated by the PLL.

The scan period (t_{SCAN}) or the line repetition period is set by the MCLK period and the scan time range (STR) setting that is programmed through the SPI™ interface. The selected STR defines the integer number of MCLK cycles in a t_{SCAN}.

Valid values of STR are 0, 1, 2, and 3, corresponding to the four possible values of MCLK cycles, respectively: 256, 512, 1024, and 2048. Table 1 summarizes the t_{SCAN} values for different STR settings and MCLK frequencies.

Table 1. t_{SCAN} Across STR and f_{MCLK}

SCAN TIME RANGE (STR)	NUMBER OF MCLK CYCLES IN ONE $t_{SCAN} = 2^{(8 + STR)}$	f_{MCLK} RANGE	t_{SCAN} RANGE = $t_{MCLK} \times 2^{(8 + STR)}$
0	256	20 MHz to 10 MHz	12.8 µs to 25.6 µs
1	512		25.6 µs to 51.2 µs
2	1024		51.2 µs to 102.4 µs
3	2048		102.4 µs to 204.8 µs

Figure 19 illustrates a typical integrator channel schematic. Each integrator has a reset switch that resets the integrator output to a reset level when IRST = 1. The device integrates the input current when this switch is open. There are two sample-and-hold circuits (for the reset sample and the signal sample) connected to each integrator output. The reset sample (SHR) samples the integrator reset level output and the signal sample (SHS) samples the integrator output post integration of the signal charge. The device subtracts the SHR sample from the SHS sample. The difference is converted to digital using an on-chip, 16-bit analog-to-digital converter (ADC). This action is termed *correlated double sampling (CDS)*. CDS removes integrator offset and low-frequency noise from the device output.

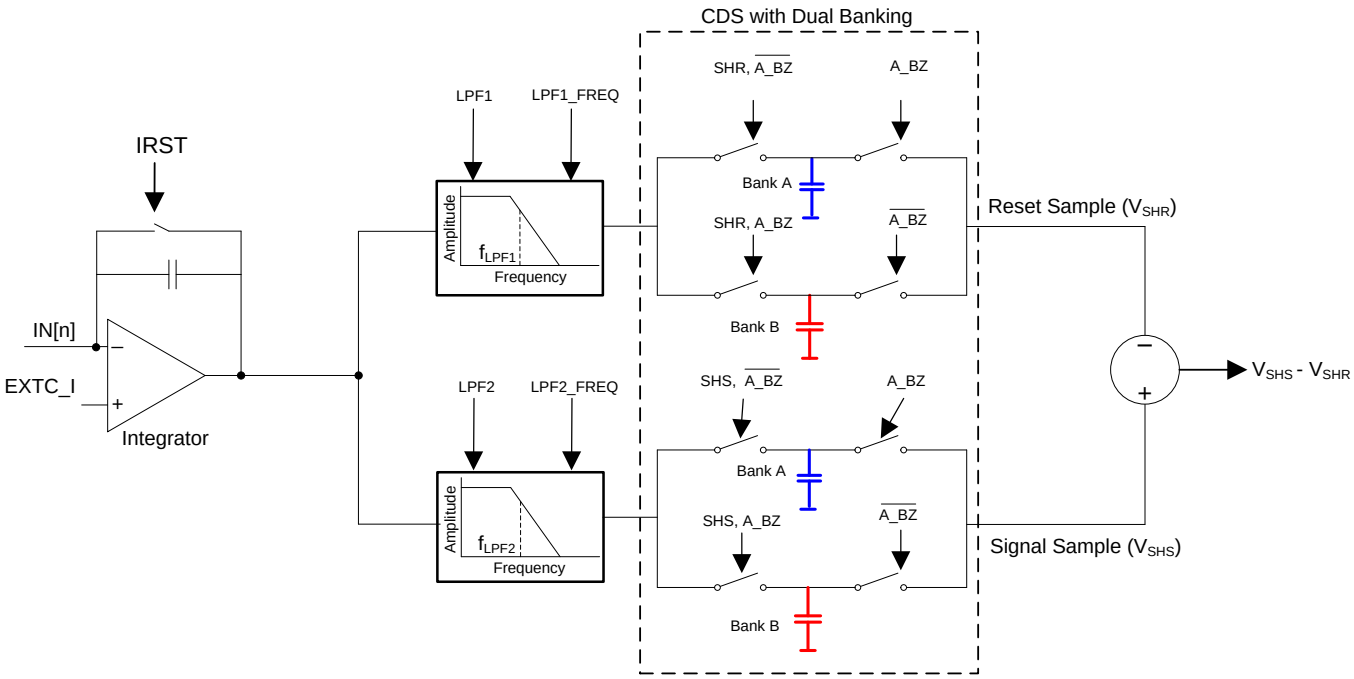

Figure 19. Integrator Channel Schematic

Each sample-and-hold circuit employs two banks of capacitors, referred to as *bank A* and *bank B*. Bank B data from the previous integration cycle are read (through the on-chip ADC) and bank A samples the data from the ongoing integration.

Conversely, bank A data are read in the next line period and bank B samples data from the ongoing integration. This pipelined operation helps optimize frame time for integration and data reads.

Each sample-and-hold circuit has a built-in, low-pass filter (LPF). This filter limits the sampling bandwidth in order to limit the sampled noise. The AFE2256 features five user-selectable, LPF filter-bandwidth settings: 210 kHz, 105 kHz, 52 kHz, 26 kHz, and 13 kHz.

The timings of the reset and sampling control signals (IRST, SHR, SHS, LPF1, LPF2, DF_SM[5:0], and TDEF) are programmed by the user through register settings and are then internally generated by a real-time sequencer termed the *timing generator (TG)*.

Copyright © 2015, Texas Instruments Incorporated

7.2 Functional Block Diagram

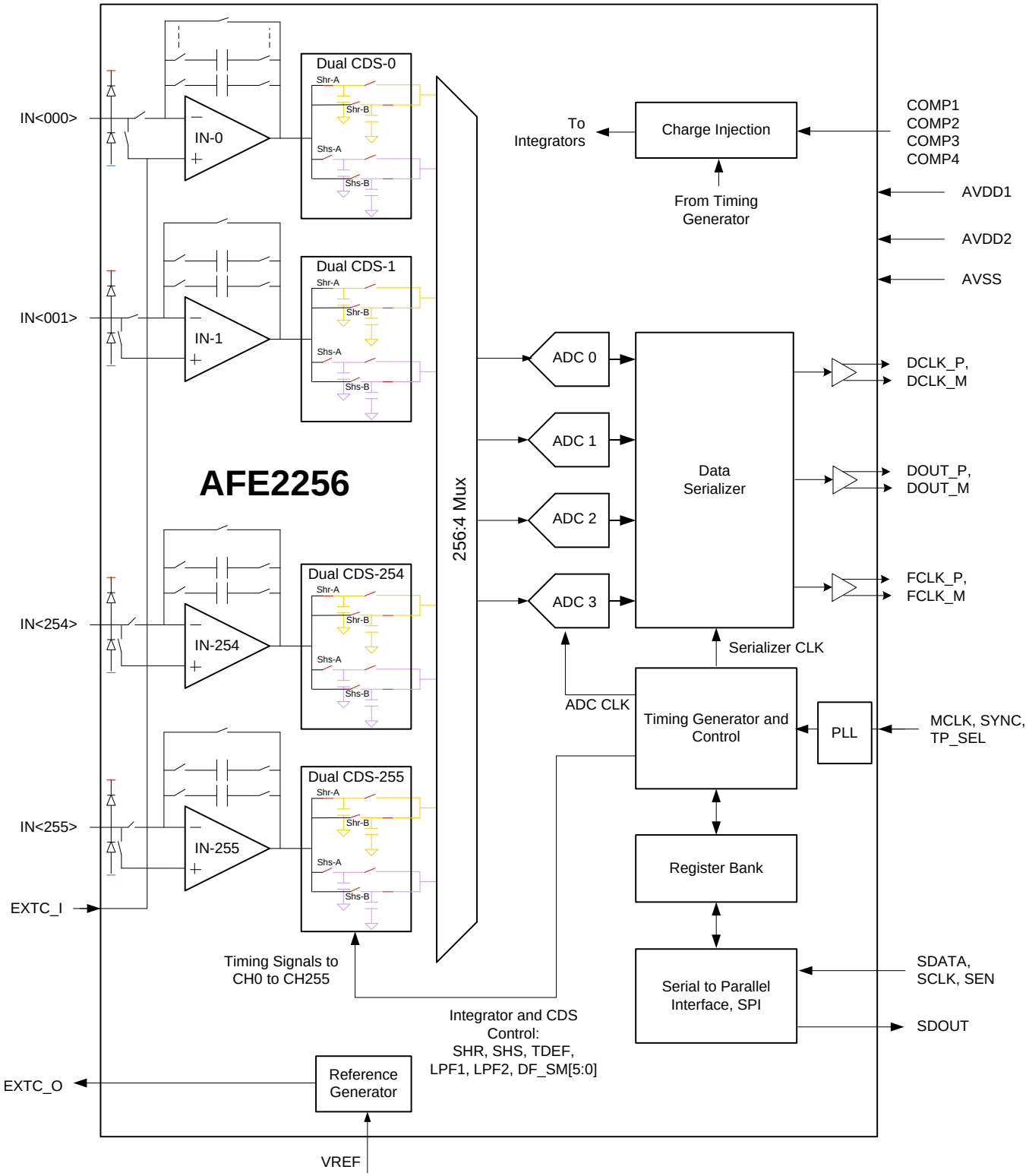

7.3 Feature Description

7.3.1 Charge Acquisition

The charge acquisition function consists of two phases: reset and integration. Asserting IRST initiates the reset phase. In this phase, the device resets all 256 integration capacitors.

Figure 20 shows a detailed reset phase timing waveform . Note that REFM is an internally-generated voltage.

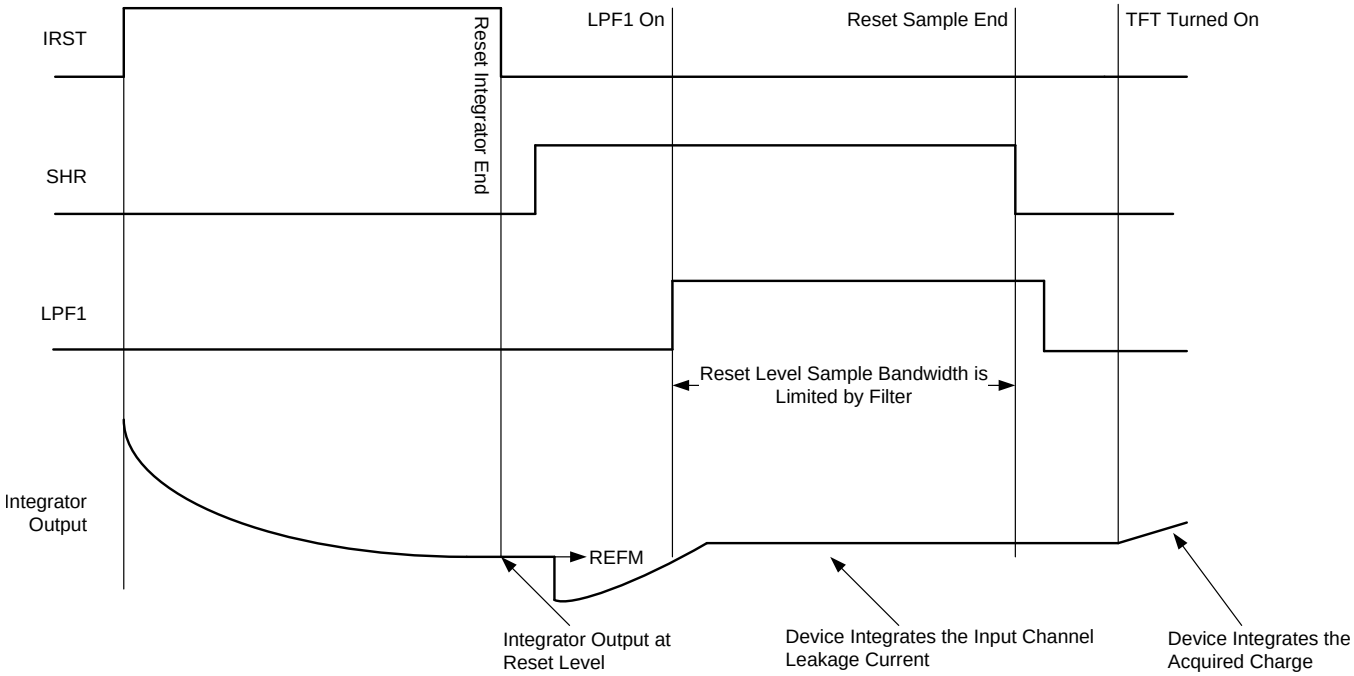

Figure 20. Detailed Reset Phase Timing Diagram

The device starts integration when IRST is low and integrates input leakage current when the external TFT (the switch connecting the pixel to the integrator channel) is off. An SHR high level connects the CDS reset sample capacitor to the integrator output from bank A or bank B, depending on the A_BZ status. The CDS capacitor tracks integrator output voltage with high bandwidth when LPF1 is low. The LPF initiates when the LPF1 signal is high. This dynamic filter control settles the offset value with high bandwidth and finally samples the values on the CDS with low bandwidth (for low noise). The LPF1 bandwidth is selected with the LPF1_FREQ setting in register 5Ch. Using LPF1 limits the noise bandwidth and therefore limits sampled noise during a reset-level sample. The CDS samples and holds the integrator reset level output on the SHR falling edge.

Afterwards, the integration phase (see Figure 21) starts. The device integrates the pixel charge during the external TFT switch on-time. Pixel charge integration starts from the reset level.

Copyright © 2015, Texas Instruments Incorporated

Feature Description (continued)

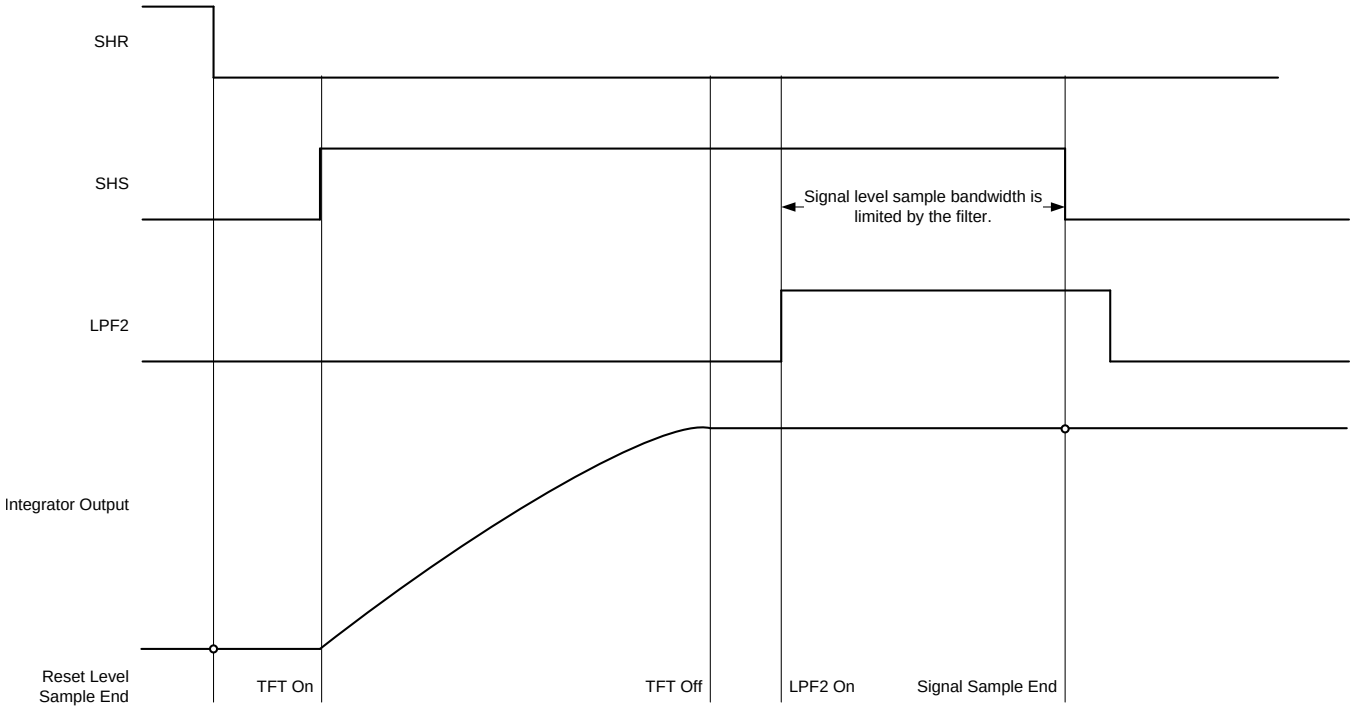

Figure 21. Detailed Integration Phase Timing Diagram

The integrator output increases from REFM (reset level). There are six different integrator ranges. For any range, the device can linearly integrate the input charge as long as the input charge is less than the selected charge range, including the gain and offset errors.

An SHS high level connects the CDS signal sample capacitor to the integrator output from bank A or bank B, depending on the A_BZ status. SHS is recommended to be asserted (that is, pull SHS high) either when the external TFT turns on or before it turns on. The CDS capacitor tracks integrator output voltage with high bandwidth when LPF2 is low. The LPF initiates when the LPF2 signal is high. This dynamic filter control helps acquire the signal with high bandwidth (for good linearity) and finally samples the signal on the CDS capacitor with low bandwidth (for low noise). LPF2 limits noise bandwidth and therefore limits sampled noise during the signal level sample. The LPF2 bandwidth is selected with the LPF2_FREQ setting in register 5Ch. The CDS samples and holds the integrator signal level output on the SHS falling edge.

During data read, the device outputs a digital code proportional to the difference of the SHS and SHR samples. This scheme removes offset and noise coming from the integrator reset. The integration phase ends with an SHS falling edge; data corresponding to all 256 channels are ready to be converted by the ADC.

Feature Description (continued)

7.3.2 Analog-to-Digital Conversion

The 256 front-end channels are multiplexed into four on-chip, 16-bit ADCs, as shown in Figure 22. For a given charge range (R), the ideal output code (D) is related to the input charge (Q) as [D = (Q / R) × (2^{16})].

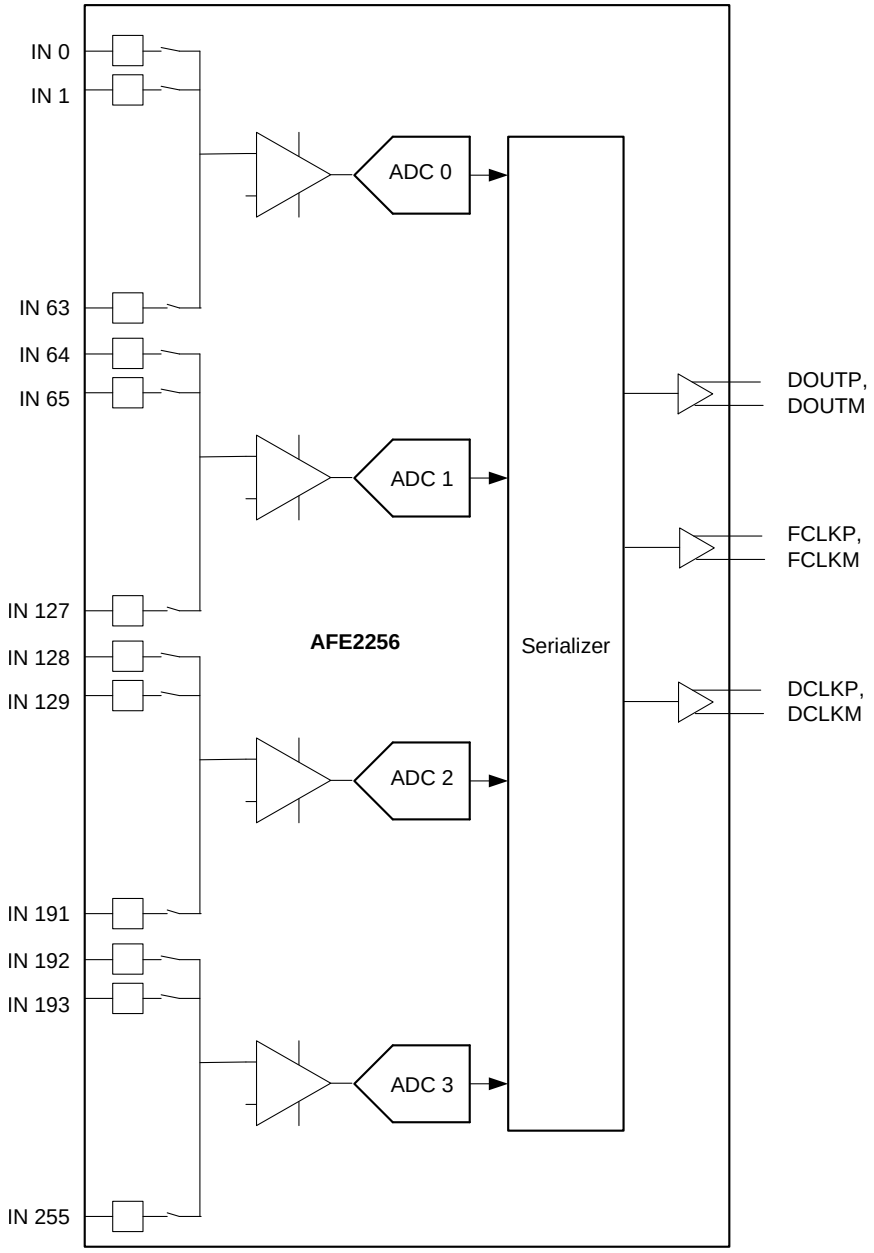

Figure 22. Input Channels Converted by ADCs

ADC0 converts channels 0 to 63, ADC1 converts channels 64 to 127, ADC2 converts channels 128 to 191, and ADC3 converts channels 192 to 255.

The four ADCs work in parallel, each with a sampling frequency of f_{MCLK} / 4. Each ADC converts its set of input channels in a specific order. For example, in STR = 0, at each sampling clock cycle an ADC samples channel n and converts it into a digital word. On the next sampling clock cycle, the same ADC samples the next channel (n+1), and so on. After converting the last channel in its set of 64 channels from one CDS bank, the A_BZ signal toggles and the ADC starts converting from the other CDS bank. This process automatically continues as long as MCLK is applied and the device is powered up.

 Copyright © 2015, Texas Instruments Incorporated

Feature Description (continued)

Register bits are provided to control the ADC conversion direction and, thus, the LVDS shift out direction, as described in the *Data Output* section.

When the user selects a non-zero scan time range (STR = 1, 2, or 3), the ADC automatically takes multiple conversions of the same channel and generates the averaged output, thus improving noise performance. The ADC averaging factor is the number of times the ADC converts a channel before averaging it and proceeding to sample the next channel in its set. The ADC averaging factors, for the different values of STR, are listed in Table 2.

Table 2. ADC Averaging Factors Across STR Settings

SCAN TIME RANGE (STR)	NUMBER OF MCLK CYCLES IN ONE t_{SCAN} [$P = 2^{(8 + STR)}$]	ADC SAMPLING FREQUENCY (f_S)	ADC AVERAGING FACTOR (= P / 256)
0	256	f_{MCLK} / 4	1
1	512		2
2	1024		4
3	2048		8

The total ADC conversion time for all channels is exactly equal to the front-end rate (t_{SCAN}) for all STR and MCLK values.

After converting the channels in order, the ADC digital data are serialized and transferred to the LVDS outputs.

7.3.3 Data Output

The 16-bit ADC data are appended with an 8-bit alignment vector, forming a 24-bit data word. These eight bits can be used for detecting the first channel in the data stream, verifying data integrity by a cyclic redundancy check (CRC), and so forth. Details regarding the alignment vector can be found in the *Alignment Vector* section.

7.3.3.1 Data Serialization

The 24-bit data from each ADC are serialized and output over one LVDS pair (DOUT), together with the bit clock (DCLK) and the frame clock (FCLK).

The duration of the 24-bit data is $t_{MCLK} \times 2^{(STR)}$ (with STR = 0 to 3). Figure 23 illustrates the data timing diagram for STR = 0.

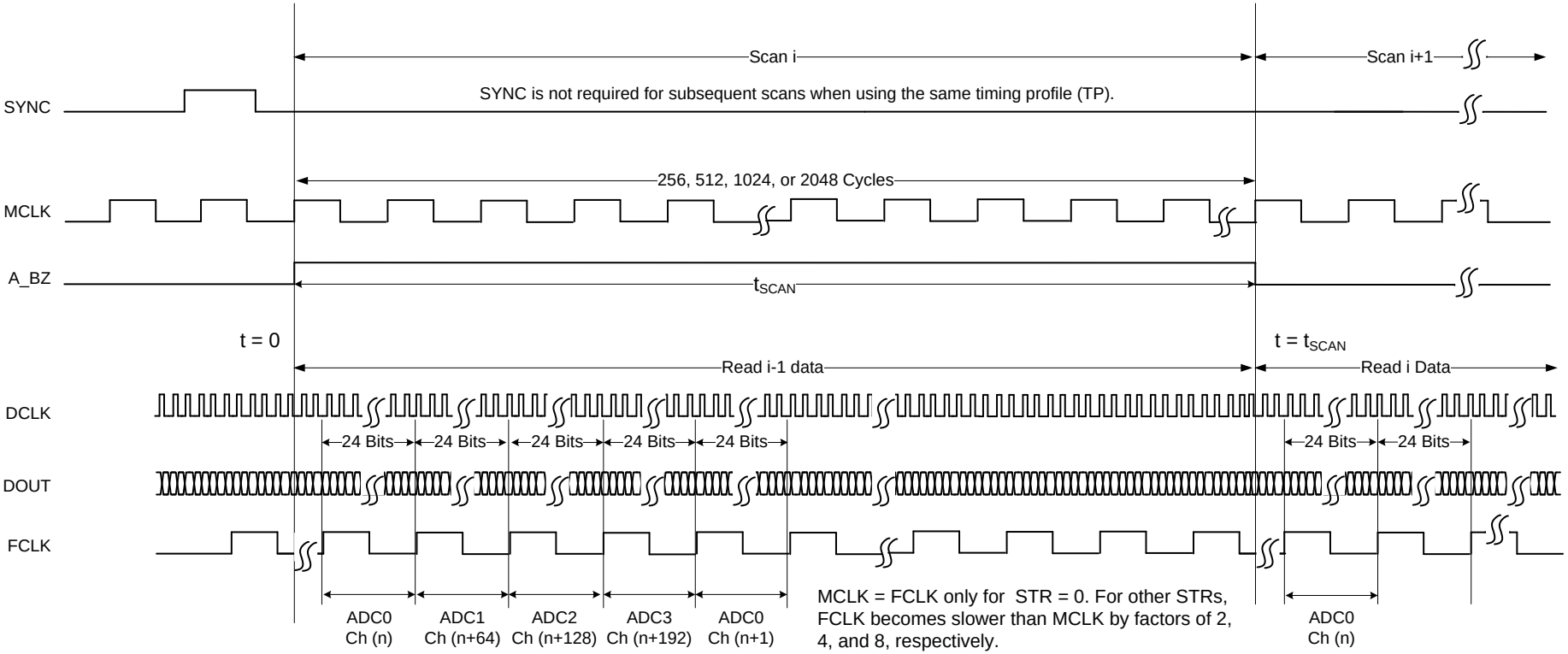

Figure 23. Digital Data Read Timing Diagram for STR = 0

The output LVDS data rate is 24 / (t_{MCLK} × $2^{(STR)}$) bits per second. The LVDS data rate for various MCLK frequencies and STR settings is listed in Table 3.

Table 3. Data Throughput for Different STR Settings

SCAN TIME RANGE (STR)	NUMBER OF MCLK CYCLES IN ONE $t_{SCAN} = 2^{(8 + STR)}$	f_{MCLK} RANGE	DATA THROUGHPUT RANGE [= 24 × f_{MCLK} / $2^{(STR)}$]
0	256	20 MHz to 10 MHz	480 Mbps to 240 Mbps
1	512		240 Mbps to 120 Mbps
2	1024		120 Mbps to 60 Mbps
3	2048		60 Mbps to 30 Mbps

Copyright © 2015, Texas Instruments Incorporated

Figure 24 shows the format of the output data word. Starting with an FCLK rising edge, the device simultaneously outputs FCLK, DCLK, and DOUT. Each data word bit can be latched with the DCLK signal, using the DDR scheme.

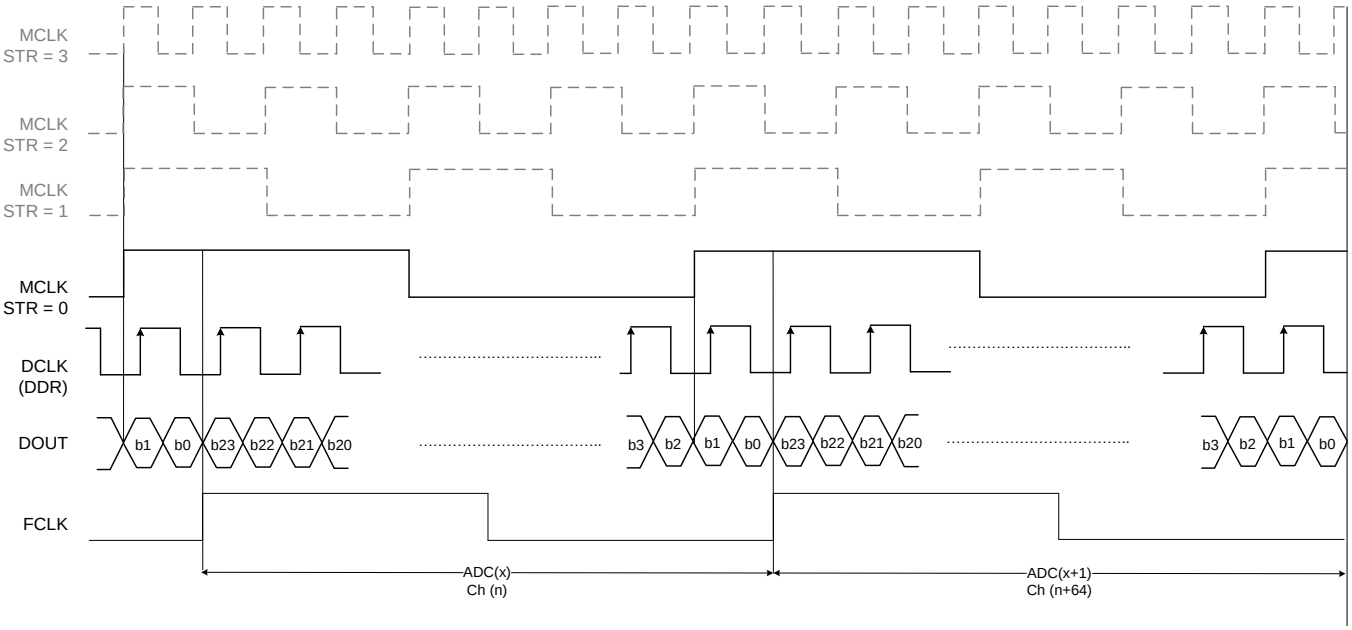

Figure 24. LVDS Timing Diagram

7.3.3.2 Alignment Vector

Each 24-bit ADC sample contains 16-bit ADC data and an 8-bit alignment vector. The alignment vector is useful to detect the first channel in a data stream. Additional details regarding word alignment can be found in the *Application and Implementation* section.

Bit mapping in the alignment vector depends on the CONFIG_MODE (register 10h, bit 11) setting. Table 4 shows the output bit mapping.

Table 4. Output Bit Mapping and Alignment Vector

DATA BIT DESCRIPTION	ADC DATA (D[23:8])	ALIGNMENT VECTOR							
		D7	D6	D5	D4	D3	D2	D1	D0
CONFIG_MODE = 1	MSB-first, 16-bit data	Y	X	1	1	1	0	0	0
CONFIG_MODE = 0		Y	X	W	0	0	0	CRC1	CRC0

The alignment vector also provides timing profile selection information and data validity with a CRC check. Table 5 shows various fields in the alignment vector.

Table 5. Alignment Vector Bit Descriptions

VALUE	DESCRIPTION
Y	First column indicator; Y = 1 for the first channel in each set of 64 channels. For example, in forward scan mode, Y = 1 for channels 0, 64, 128, and 192. For reverse scan mode, Y = 1 for channels 63, 127, 191, and 255. For auto-reverse mode in the forward scan case, Y = 1 for channels 0, 64, 128, and 192 in line N converted by bank A. Y = 1 for channels 63, 127, 191, and 255 in line N+1 converted by bank B. See the *Scan Direction* section for details regarding scan mode.
X	Bank select signal; X = 1 for bank A. The device always starts from bank A when SYNC is detected.
W	For timing profile TP_{α}, W = 0. For timing profile TP_{β}, W = 1. Details regarding the timing profile can be found in the *Timing Profiles* section.
CRC1	CRC bits. For details regarding the CRC, see the *Cyclic Redundancy Check (CRC)* section.
CRC0	

7.3.3.3 Scan Direction

The AFE2256 provides programmability for the order in which the channel data are digitized and sent over the LVDS link. By default, the device sends data in forward scan mode. Table 6 shows the channel order on the LVDS link in forward scan mode. The reverse scan mode is set when the REVERSE_SCAN bit (register 11h, bit 15) = 1. As shown in Table 7, reverse scan mode sends the last channel (in the set of 64 channels) first.

Table 6. Forward Scan Mode: Channel Order on the LVDS Link

REGISTER SETTING (Reg 11h, Bits 15, 13)	MODE	BANK	SAMPLE NUMBER	0	1	2	3	4	5	6	7	…	252	253	254	255
00	Forward scan	A	Channel number	0	64	128	192	1	65	66	193	…	63	127	191	255
		B	Channel number	0	64	128	192	1	65	66	193		63	127	191	255

Table 7. Reverse Scan Mode: Channel Order on the LVDS Link

REGISTER SETTING (Reg 11h, Bits 15, 13)	MODE	BANK	SAMPLE NUMBER	0	1	2	3	4	5	6	7	…	252	253	254	255
10	Reverse scan	A	Channel number	63	127	191	255	62	126	190	254	…	0	64	128	192
		B	Channel number	63	127	191	255	62	126	190	254		0	64	128	192

Copyright © 2015, Texas Instruments Incorporated

Auto-reverse mode (set by register 11h, bit 13 = 1) reverses the channel order for bank B. For example, if the auto-reverse bit is set in forward-scan mode, then the data are sent as shown in Table 8. Table 9 shows the channel order in reverse scan with auto reverse.

Using auto-reverse mode is recommended for optimum performance. Forward or reverse scan can be set as per panel-scan requirements.

Rearrange the data with the image generation tool as per the scan direction selected in the AFE2256.

Table 8. Forward Scan Mode with Auto-Reverse: Channel Order on the LVDS Link

REGISTER SETTING (Reg 11h, Bits 15, 13)	MODE	BANK	SAMPLE NUMBER	0	1	2	3	4	5	6	7	…	252	253	254	255
01	Forward scan with auto-reverse	A	Channel number	0	64	128	192	1	65	66	193	…	63	127	191	255
		B	Channel number	63	127	191	255	62	126	190	254		0	64	128	192

Table 9. Reverse Scan with Auto Reverse: Channel Order on the LVDS Link

REGISTER SETTING (Reg 11h, Bits 15, 13)	MODE	BANK	SAMPLE NUMBER	0	1	2	3	4	5	6	7	…	252	253	254	255
11	Reverse scan with auto-reverse	A	Channel number	63	127	191	255	62	126	190	254	…	0	64	128	192
		B	Channel number	0	64	128	192	1	65	66	193		63	127	191	255

Copyright © 2015, Texas Instruments Incorporated

7.3.4 Internal Timing Generator (TG)

The AFE2256 has an internal timing generator (TG) that creates and synchronizes all the internal clocks and control signals for multiple successful scans. The TG generates these signals with a period of t_{SCAN}. The A_BZ signal is generated with a period of 2 × t_{SCAN}.

As shown in Figure 25, the TG uses three external CMOS level signals to operate: SYNC, MCLK, and TP_SEL.

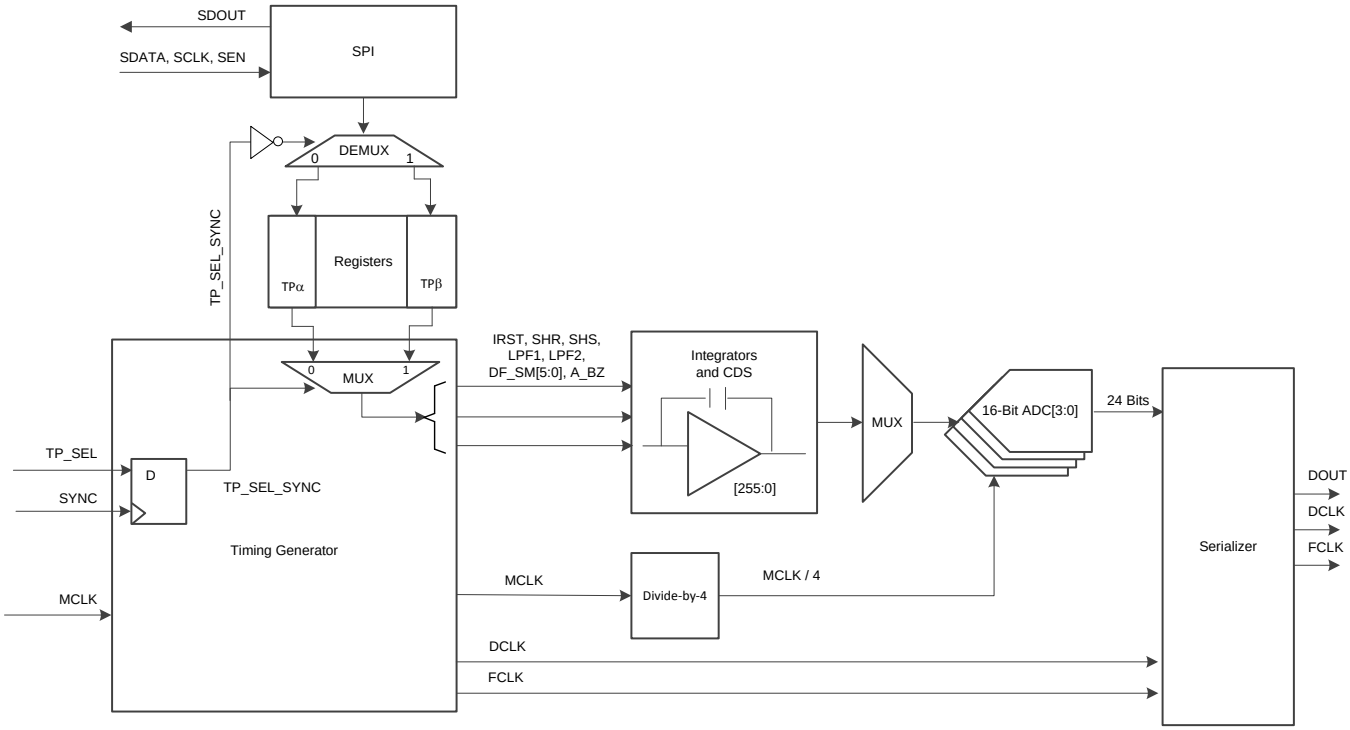

Figure 25. Timing Generator Block Diagram

The MCLK signal is the system master clock. All internal front-end and back-end controls and clocks are derived from MCLK.

The SYNC signal is the synchronization pulse that indicates the beginning of the scan time. When SYNC is detected, the TG logic starts counting the MCLK cycles and internally generates all required clocks and control signals for the integrators, the ADCs, and the data serializer. Ideally, SYNC only must be applied the first time to synchronize the TG with the external controller. Afterwards, the TG keeps track of the MCLK and internally generates the programmed waveforms with a period of t_{SCAN}.

Note than when SYNC is applied, the scan is always started with A_BZ high. In other words, the AFE2256 deterministically selects the CDS bank for the scan. By using the SPI interface, the user can program the rising and falling edge for every control signal: IRST, SHR, SHS, LPF1, LPF2, TDEF, and DF_SM[5:0].

Each signal is defined by a 16-bit word in the timing generator register space corresponding to that signal.

Copyright © 2015, Texas Instruments Incorporated

For all STR settings, after the SYNC signal is detected, the t_{SCAN} is split into 256 equally-spaced time locations and the 16-bit word defines the exact location where the rising and falling edge occur for that signal. The upper byte (rise_edge) defines the rising edge location. The lower byte (fall_edge) defines the falling edge location. Thus, the 8-bit edge location can be also interpreted as the integer number that always goes from 0 to 255, defining which of the 256 timing locations that the specified transition (rise or fall) must occur on in the specified signal. Figure 26 shows the effect of the TG register programing in various STR settings. The MCLK rising edge after SYNC is detected is considered as the zero (0) MCLK edge, as described in Figure 27.

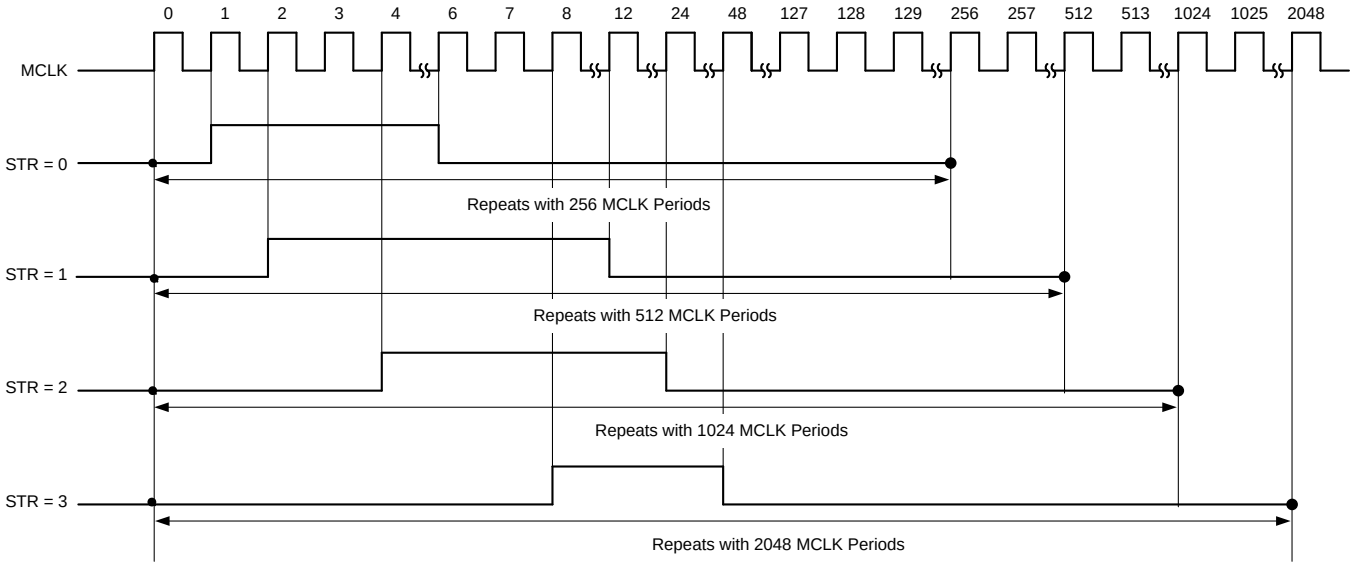

Figure 26. IRST Pulse Duration for Various STR Settings (Register address 40h is programmed with 0106h.)

For example, if address 40h (IRST) is written as 0106h and STR = 0, the IRST signal goes high at MCLK rising edge 1, goes low at MCLK rising edge 6, and is periodic with 256 MCLKs. If address 42h (SHR) is written as 0720h and STR = 1, the SHR signal goes high at MCLK rising edge 14, goes low at MCLK rising edge 64, and is periodic with 512 MCLKs.

NOTE

1. If rise_edge = fall_edge = 00h, the signal is always 0.
2. The signal is always high for all other settings of rise_edge = fall_edge. For example, IRST_RISE = IRST_FALL = 01h keeps the integrator in reset for the entire scan duration.

7.3.4.1 Constraints on TG Values

The rising edge can be programmed to be before or after the falling edge, thus providing greater flexibility in timing. This option is useful for charge injection compensation and gate driver signal generation.

The following constraints are applicable to the otherwise fully-flexible timing generator register space. These restrictions are in place only for an active scan in order to retain the analog performance as per the specification:

- The IRST rising edge must not be programmed as 00h.
- The SHR rising edge must be at least one value greater than the IRST falling edge.
- The SHS rising edge must be at least one value greater than the SHR falling edge.
- The LPF1 falling edge must be at least one value greater than the SHR falling edge.
- The LPF2 falling edge must be at least one value greater than the SHS falling edge.
- The SHS falling edge must not be programmed as either 00h or FFh.
- For STR = 0 and STR = 1, the rising and falling edge locations for SHR and SHS are recommended to be set at (4n + 1), where n is an integer.

Calculating TG register settings is explained in the *Programming the TG* section.

7.3.4.2 Timing Profiles

The AFE22256 allows two different timing profiles (TPα and TPβ) to be programmed into the device, thus allowing the timing profile to be quickly changed using the TP_SEL and SYNC pins. This scheme avoids any latency that results from reprogramming the timing generator register space for a new profile using the serial interface. The register content of TPα and TPβ must be programmed before proceeding with a valid scan. MCLK must be running when the timing profiles are programmed.

Both timing profiles (TPα and TPβ) share the same register addresses; that is, address 40h to 55h. For example, address 40h is common to the IRST signals for both profiles TPα and TPβ.

Only one of the profiles is active (used for timing generation by the TG machine) at a time. The serial interface write operations on the timing generator register space always occur on the inactive profile, thus ensuring that the active profile is not disturbed when the inactive profile is modified. TP_SEL_SYNC (generated by latching TP_SEL with SYNC, see Figure 25) is used to decide which profile is active.

The user can switch between TPα and TPβ by toggling the TP_SEL pin and providing a SYNC pulse, as shown in Figure 27. The SYNC signal is not recommended to be applied for successive scans that use the same timing profile. When switching between timing profiles, SYNC must be applied at the start of a new line of CDS bank A, as shown in Figure 27. Otherwise, the output data (DOUT) bit alignment with respect to DCLK can become corrupted. If SYNC cannot be applied at the start of a new line (for example, for the first SYNC after power-up), a bit realignment is necessary in the system FPGA to correctly realign the bits to correctly form the ADC word from the DOUT serial stream. The bit alignment technique is described further in the *Application and Implementation* section.

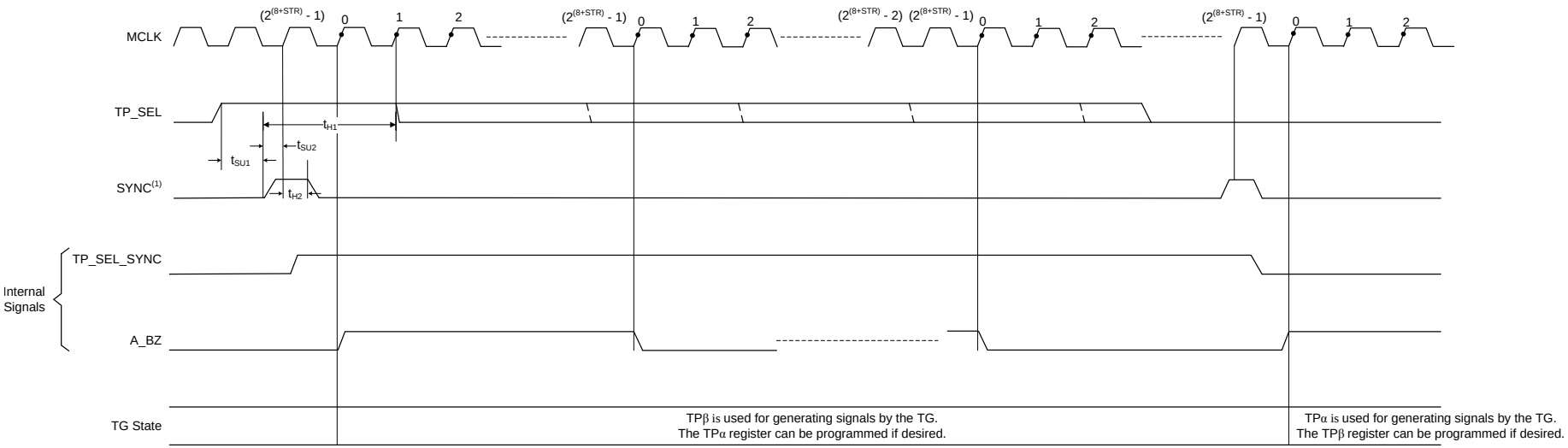

(1) Ideally, the SYNC rising edge must occur at MCLK = $2^{(8 + STR)}$ – 1 and A_BZ = 0. Otherwise, a bit realignment is required in the FPGA.

Figure 27. Timing Profile Switching Diagram

Copyright © 2015, Texas Instruments Incorporated

7.3.5 TFT Charge Injection Compensation and Photodiode Residual Charge Compensation

Turning the thin-film transistor (TFT) of the flat-panel detector on and off injects charge onto the integrator inputs, thus resulting in decreased dynamic range. The AFE2256 provides a special feature (enabled by setting register 5Dh) to compensate for this TFT charge during both turn-on and turn-off.

The compensation charge injected by the scheme can be either positive or negative. The compensation scheme uses the external voltages COMP1 and COMP2, of which one can be grounded.

There are five charge injection capacitors (C[4:0]) that are sized to have a piece-wise approximation of an exponential charge injection, as given by Equation 1:

$$C[4] = e \times C[3] = e^2 \times C[2] = e^3 \times C[1] = e^4 \times C[0]$$

where

- e = 2.718 (Napier's constant) (1)

Each of these capacitors can be fully disconnected if not required by using the static bits DFTV_CAP_SEL_x in configuration register address 5Dh.

When ENB_DFTV_ALL = 0, all charge injection capacitors are disabled. Set ENB_DFTV_ALL to 1 in order to use any charge injection capacitor.

The connection between the capacitors C[x] and the COMP1, COMP2 voltage is controlled by the DF_SMx signals that are generated by the TG. A low value of the DF_SMx signal connects C[x] to COMP1 and a high value of DF_SMx connects C[x] to COMP2.

Similar to other signals generated by the TG, the rising and falling edges of DF_SMx are determined by the 16-bit contents of addresses 50h to 54h in the timing generator register space. Furthermore, similar to other control signals, the register bank contains two separates sets of timing profiles for each DF_SMx signal.

The AFE2256 can also independently compensate for a stored residual charge on the photodiode by using the COMP3 and COMP4 external voltages in conjunction with DF_SM5 and capacitor C[5]. Configure the ENB_DFTV_ALL = 1, DFTV_CAP_SEL_5 = 1, and DF_SM5 timings to use this feature.

The DF_SM5 signal is controlled by the TG similar to DF_SM[4:0]. A low value of the DF_SM5 signal connects C[5] to COMP3 and a high value of DF_SM5 connects C[5] to COMP4. Only COMP3 can be connected to an external low-noise voltage source; COMP4 can be grounded.

Both the TFT charge injection and photodiode residual charge compensation schemes are illustrated in Figure 28.

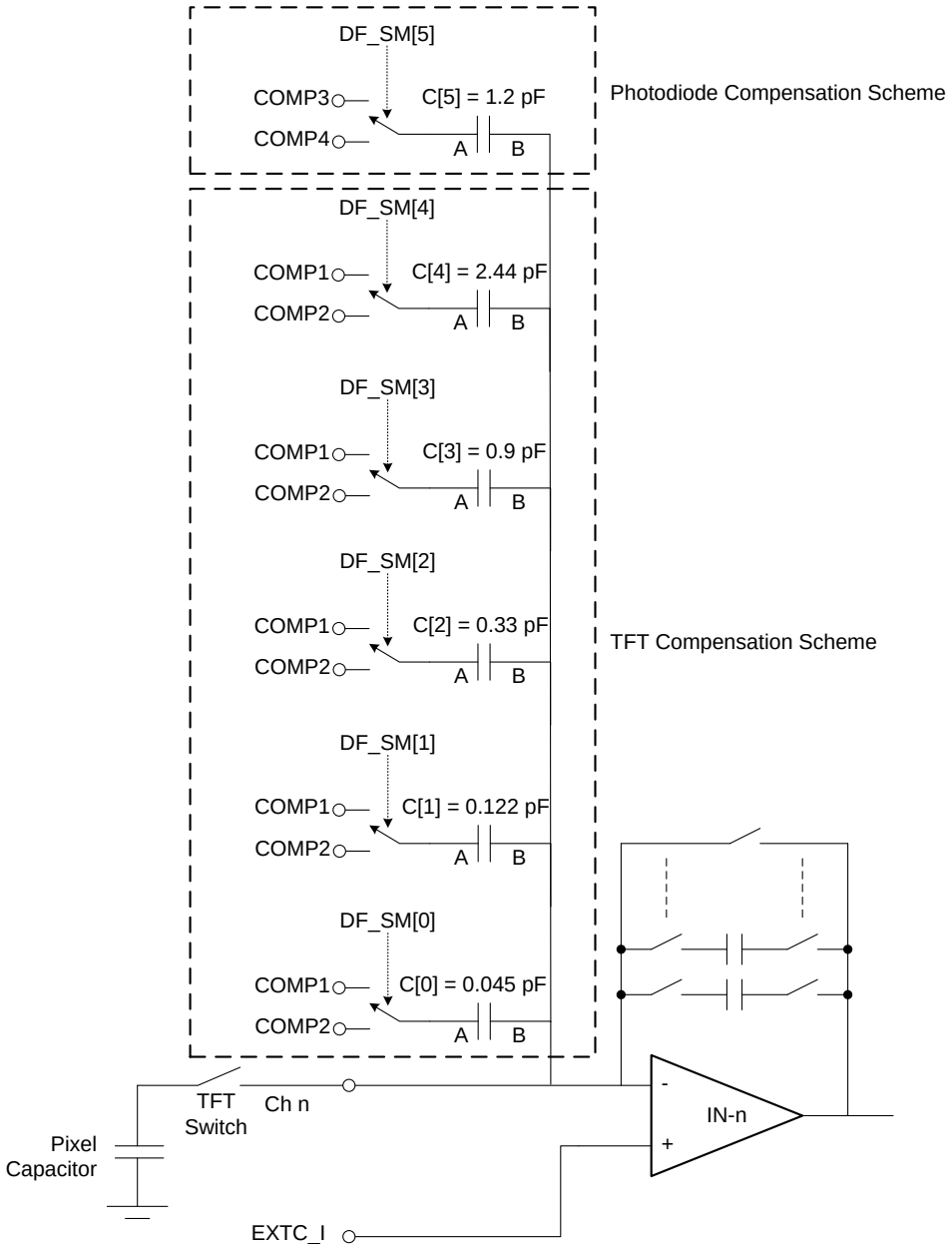

Figure 28. TFT Charge Injection and Photodiode Residual Charge Compensation Scheme

7.3.6 Quick Wakeup

The power-up time is the minimum time required for the device during power-up from Nap or power-down, after which the device starts providing a stable output. After the power-up time, all internal nodes of the device are at steady-state values.

The EXTC_I pin has a low-pass filter with a very low cutoff frequency. The low cutoff frequency is essential for optimum noise performance of the device. During power up, EXTC_I takes a large duration of time to reach a steady-state value and is the dominating factor influencing power-up time.

Quick wakeup mode (set by register 13h, bit 5 = 1) increases the bandwidth of the EXTC_I low-pass filter, thus reducing the power-up time. Therefore, to avoid negatively affecting noise, reset the quick wakeup bit to 0 before starting the data capture. Figure 61, Figure 62, and Figure 63 detail usage of this bit.

Copyright © 2015, Texas Instruments Incorporated

7.3.7 Pixel Short Detection

Shorted pixels in the panel overload adjacent channels, thus creating T-shaped artifacts in the image. The AFE2256 includes a pixel short-detection feature that is helpful in suppressing the *T-defect* displayed in the image. The pixel short-detection mechanism detects a pixel overload condition and immediately resets the integrator. This feature avoids driving the integrator into deep saturation, which can affect adjacent pixels. Note that because the integrator is in a reset state, the current drawn by a shorted pixel can be provided without changing the data line voltage. This feature can be enabled by configuring the ENB_TDEF bit (register bit 5Dh, bit 10) = 1 and selecting the appropriate timings in register 4Ah; see Figure 1 for the TDEF signal timings.

7.3.8 C_{sensor} Emulation

This feature is provided to emulate the data line capacitance (C_{sensor}) to test the AFE2256 noise performance. At the input of every channel, a capacitor with a value of 20 pF, 30 pF, or 50 pF per channel can be added by configuring the ADD_CAP setting (register 5Dh, bits 12-11); see Figure 29. Using this option, channel noise can be measured without connecting the devices to a panel. C_{sensor} can be useful to evaluate and debug system noise performance. This option is usually used in conjunction with the isolate panel feature (see the *Isolate Panel* section) to avoid external noise pickup during noise measurement.

7.3.9 Isolate Panel

This feature is useful to isolate the device from the panel without physically disconnecting the device. This option is useful during system debug but must be disabled during normal operation. As shown in Figure 29, there is a series switch between the IN pins and integrator amplifier inputs. When the ISOLATE_PANEL bit (register 5Dh, bit 14) = 1, the switch is opened and all channels are disconnected from the panel. As shown in Figure 29, the panel is connected to the EXTC_I voltage. Therefore, isolate_panel mode does not disturb the data line voltage.

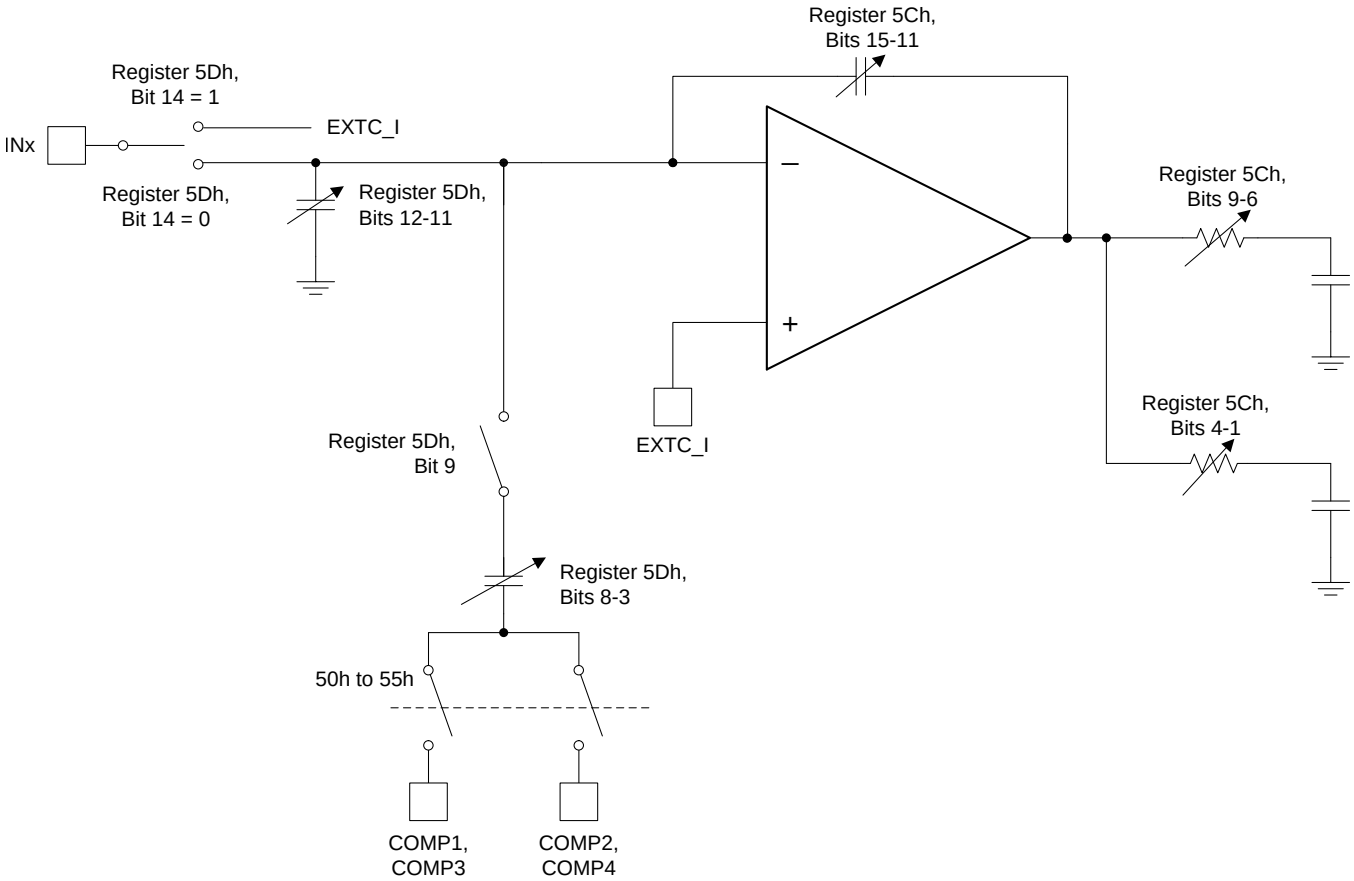

Figure 29. Register Bit Control Schematic

7.3.10 TG Signal Probe

This option is useful to verify if the IRST, SHR, and SHS timing signals are correctly programmed. This option is also useful to check the timing generation profile selection. By configuring the PROBE_SIGNAL bits (register 5Ah, bits 7-0) to different values as specified in register 5Ah, these signals can be probed on the SDOUT pin. This option is also used when gate driver signals are generated from the AFE2256; see the *Generating Gate Driver Signals from the AFE2256* section for further information. Note that the SDOUT pin is multiplexed between the TG signal probe and the register read function. Thus, only one of these options can be selected at a time.

7.4 Device Functional Modes

7.4.1 Test Patterns

The AFE2256 provides the facility to generate known output data to check the functionality of deserialization, data processing, and image formation. This section describes various test patterns available in the AFE2256 and their uses. These test patterns are listed in Table 10.

All test patterns (except the sync/deskew pattern) replace the ADC data with known data without disturbing the alignment vectors. Thus, the replaced data can be processed exactly the same way as normal data. The sync/deskew pattern provides a fixed pattern of FFF000h without an alignment vector.

Table 10. Test Patterns and Their Applications

TEST_PATTERN_SEL BITS (Register 10h, Bits 9-5)	TEST PATTERN NAME	APPLICATION
00000b	Test pattern disabled	ADC data are transmitted over the LVDS link
10111b (1)	All zeroes	Data = 0h, useful to verify the LVDS link functionality
11001b (1)	All ones	Data = FFFFh, useful to verify the LVDS link functionality
10011b (1)	Ramp pattern	Verify data capture
10001b (1)	Row-column counter	Verify channel-to-column mapping in an image
11110b (1)	Sync/deskew pattern	Bit alignment (without using a frame clock)

(1) Instead of ADC data, this test pattern is sent over the LVDS link.

7.4.1.1 All Zeroes and All Ones Patterns

These patterns are useful to check the functionality of the LVDS link. These patterns are also useful to identify the LVDS polarity inversion, stuck code, or bit inversion in the firmware.

7.4.1.2 Ramp Pattern

This pattern is the most basic pattern to verify data capture. The ramp pattern provides linearly-incrementing ramp data, as shown in Table 11. The device generates a 16-bit ramp pattern. For each sample, the data value increments by 1. The count resets at overflow (after FFFFh, decimal 65535) or when applying or asserting the SYNC pulse.

To determine the correct ramp pattern, data do not need to be rearranged. This pattern is useful in verifying the correct data deserialization and word alignment process. For simplicity of checking the ramp pattern, configure the device in forward scan mode (REVERSE_SCAN = 0) with AUTO_REVERSE = 0.

Table 11. Data on the LVDS Link in Ramp Pattern with REVERSE_SCAN = 0 and AUTO_REVERSE = 0 (1)

ROW NUMBER	SAMPLE NUMBER																	
	0	1	2	3	4	5	...	64	65	...	128	129	...	192	193	...	254	255
1	0	1	2	3	4	5	...	64	65	...	128	129	...	192	193	...	254	255
2	256	257	258	259	260	261		320	321		384	385		448	449		510	511

(1) Alignment vector is not shown.

Copyright © 2015, Texas Instruments Incorporated

7.4.1.3 Row-Column Counter

As discussed in the *Data Output* section, the device sends the data of four ADCs over a single LVDS link in an interleaved manner. The image processing algorithm must map the incoming data to the correct pixel in the image. The row-column count given by this test pattern is useful to check if this data mapping is correct.

NOTE

The order in which bank A data and bank B data are transmitted depends on the REVERSE_SCAN and AUTO_REVERSE settings. The image generation algorithm must account for the scan settings for the correct channel to pixel mapping.

The MSB byte of the row-column counter provides the row count and the lower byte provides the column count. In the generated image, the column count increments from 0 to 255 within each row. The row count increments by 1 for each row and resets to 0 after each 255th row. Similar to the ramp pattern, the row-column counter pattern resets itself on the SYNC signal. Table 12 shows the data on the LVDS link in row-column counter mode. Table 13 shows the data after the columns are rearranged.

Table 12. Data on the LVDS Link in the Row-Column Counter with REVERSE_SCAN = 0 and AUTO_REVERSE = 0(1)

ROW NUMBER	SAMPLE NUMBER																	
	0	1	2	3	4	5	...	64	65	...	128	129	...	192	193	...	254	255
1	0	64	128	192	1	65	...	16	80	...	32	96	...	48	112	...	191	255
2	256	320	384	448	257	321		272	336		288	352		304	368		447	511

(1) Alignment vector is not shown.

Table 13. Image Generated Using Row-Column Counter Test Pattern

ROW NUMBER	COLUMN NUMBER																	
	0	1	2	3	4	5	...	64	65	...	128	129	...	192	193	...	254	255
1	0	1	2	3	4	5	...	64	65	...	128	129	...	192	193	...	254	255
2	256	257	258	259	260	261		320	321		384	385		448	449		510	511

7.4.1.4 Sync/Deskew Pattern

When the sync/deskew pattern is selected, data output is forced to FFF000h. The alignment vector is not transmitted in this pattern. This pattern is useful in bit alignment, as discussed in the *Using the Sync/Deskew Pattern* section.

7.4.2 Power Modes

7.4.2.1 Active Power Modes

The AFE2256 offers two active power modes: normal-power mode and low-noise mode. These modes can be used to optimize the noise and power consumption based on system requirements. As compared to normal-power mode, low-noise mode offers lower noise at the cost of increased power consumption.

The power mode can be selected by the POWER_MODE bit (register 5Dh, bit 1) and ESSENTIAL_BIT6 bit (register 16h, bit 3) as follows:

- For normal-power mode: set POWER_MODE = 0 and ESSENTIAL_BIT6 = 0.
- For low-noise mode: set POWER_MODE = 1 and ESSENTIAL_BIT6 = 1.

Low-noise mode is useful in cases where the input-referred noise of the integrator dominates (for example, when there is a lower input charge range but higher input capacitance).

Figure 5 and Figure 6 illustrate differences in noise performance between normal-power mode and low-noise mode.

7.4.2.2 Nap and Power-Down (PD) Modes

When the device is not performing an active scan, it can be kept in a power-down state to reduce overall energy consumption of the system. The AFE2256 offers two power-down modes: Nap and power-down (PD) mode.

The main difference between the Nap and power-down (PD) mode is in terms of power consumption and power-up time. See the *Electrical Characteristics* table for power consumption and power-up time in these modes.

All register contents are preserved in these modes. Therefore, register reconfiguration is not required on power-up.

The LVDS interface is powered down during these modes. Thus, if the system uses a sync/deskew pattern-based bit-alignment technique, then bit realignment is required.

Entry and exit from Nap and power-down mode is discussed in the *Initialization Setup* section.

7.5 Programming

The AFE2256 provides many registers to allow the user to optimize performance in their use case. Many parameters are also trimmed at the factory.

7.5.1 Register Initialization

During power-up, the internal registers must be initialized to their default values after the supplies are settled. The device specified performance can only be achieved after successful initialization. For example, after power-up and before the device default values are loaded, the power consumption can be higher than the specified value as a result of the unknown internal register settings.

Register initialization must be done as follows:

1. Set the RESET bit (register 00h, bit 0) high. Setting this bit initializes the internal registers to the default value (0h) and then self-clears the RESET bit to low in approximately 200 ns.
2. Optionally, quick wakeup mode (register 13h, bits 15-0 = 0020h) can be set to reduce power-up time. In order to obtain specified noise performance, if quick wakeup mode is used, disable this mode before intiating data capture (that is, set register 13h, bits 15-0 = 0h).
3. Set the TRIM_LOAD bit (register 30h, bit 1) = 1. Wait for a minimum of 100 µs. Then reset the TRIM_LOAD bit (register 30h, bit 1) = 0. Doing so loads the factory-set trim values. This step is essential to get specified device performance.
4. Program the default register values as explained in the *Default Register Settings* section.

NOTE

1. If a quick reset of the register space is desired during device operation, setting the RESET bit high is sufficient.
2. The TRIM_LOAD bit must only be cycled if the AVDD1, AVDD2 power supplies were removed after the last TRIM_LOAD cycle.
3. A RESET or TRIM_LOAD cycle is not required if only the power modes (Nap, power down) are exercised.
4. For the register initialization to take effect, the AVDD1, AVDD2 supplies must be applied and be stable.
5. All register settings are cleared on reset. Thus, the register configuration described in the *Default Register Settings* section is required after each reset.

The register initialization affects the register space, serial interface, and timing generator engines and configures the device circuits in their default states. When the internal registers change values, the data propagating through the pipe are affected. At the same time, some glitches may appear on the output as a result of transitioning registers values (for instance, if any of the output controlling modes change, glitches may occur).

Copyright © 2015, Texas Instruments Incorporated

Programming (continued)

7.5.1.0.1 Default Register Settings

This section describes the default register settings for the AFE2256 that are essential to obtain specified performance.

1. Register 61h, bits 15-0 = 4000h
2. Register 11h, bit 10 = 1
3. Register 12h, bit 14 = 1
4. Register 18h, bit 0 = 1
5. Auto-reverse scan mode is recommended to be kept enabled for optimal performance. This mode is enabled by setting the AUTO_REVERSE bit (register 11h, bit 13) = 1. For details on auto-reverse mode; see the *Scan Direction* section.
6. Program register 16h depending on the mode of operation:
   (a) In default power mode, set register 16h, bits 15-0 = 00C0h.
   (b) In low-noise mode, set register 16h, bits 15-0 = 00C8h.

7.5.2 Register Programming

Programming different modes (including the timing generator) can be done through the serial interface formed by the SEN (serial interface enable), SCLK (serial interface clock), and SDATA (serial interface data) pins. SEN has a 100-kΩ pullup resistor to AVDD1. Serially shifting bits into the device is enabled when SEN is low. SDATA serial data are latched at every SCLK rising edge when SEN is active (low). Serial data are loaded into the register at every 24th SCLK rising edge when SEN is low. If the word length exceeds a multiple of 24-bits, the excess bits are ignored. The interface can function with SCLK frequencies from 10 MHz down to very low speeds (of a few hertz). Data are divided into two main portions (the 8-bit register address and the data itself) that are loaded on the addressed 16-bit register. Figure 30 shows this process.

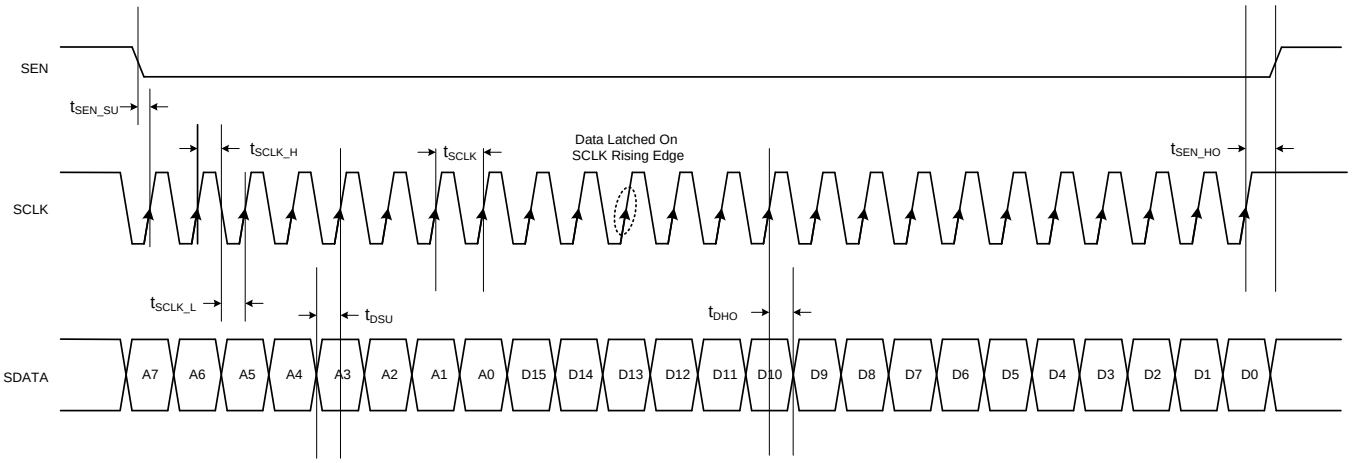

Figure 30. Serial Interface Register Write Timing Diagram

Programming (continued)

Table 14. Timing Characteristics for Figure 30 and Figure 31

		MIN	TYP	MAX	UNIT
t_{SCLK}	SCLK period	100			ns
t_{SCLK_H}	SCLK High Time	20			ns
t_{SCLK_L}	SCLK Low Time	20			ns
t_{DSU}	SDATA setup time	10			ns
t_{DHO}	SDATA hold time	10			ns
t_{SEN_SU}	SEN fall to SCLK rise	10			ns
t_{SEN_HO}	Last SCLK rising edge to SEN rising edge	10			ns
t_{OUT_DV}	SCLK falling edge to valid SDOUT (15 pF on SDOUT)(1)			20	ns

(1) See Figure 31.

7.5.2.1 Serial Register Readout

The device includes an option to read contents of the internal registers on the SDOUT pin. This option can be useful as a diagnostic check to verify the serial interface communication between the external controller and the ADC. The data read operation is shown in Figure 31.

By default, the SDOUT pin is tri-stated after power-up and device reset. When the readout mode is enabled using the REG_READ bit, SDOUT serially outputs the contents of the selected register.

Steps for register readout are as follows:

1. Set the REG_READ bit (register 00h, bit 1) = 1 to enable serial readout mode. This setting disables any further writes to the internal registers, except for register 00h. Note that the REG_READ bit is also located in register 00h. Only the contents of register 00h cannot be read in register readout mode. The device can exit readout mode by writing the REG_READ bit (register 00h, bit 1) = 0h.
2. Initiate a serial interface cycle specifying the address of the register (A[7-0]) whose content must be read. Only the SPI command address field is considered and data are ignored. Data can be set to 0.
3. The device serially outputs the contents (D[15:0]) of the selected register on the SDOUT pin, MSB first.
4. Data are shifted out on the SCLK falling edge. The external controller can latch the contents at the SCLK rising edge.
5. To exit serial readout mode, reset register 00h, bit 1 = 0 to enable writes to all device registers.

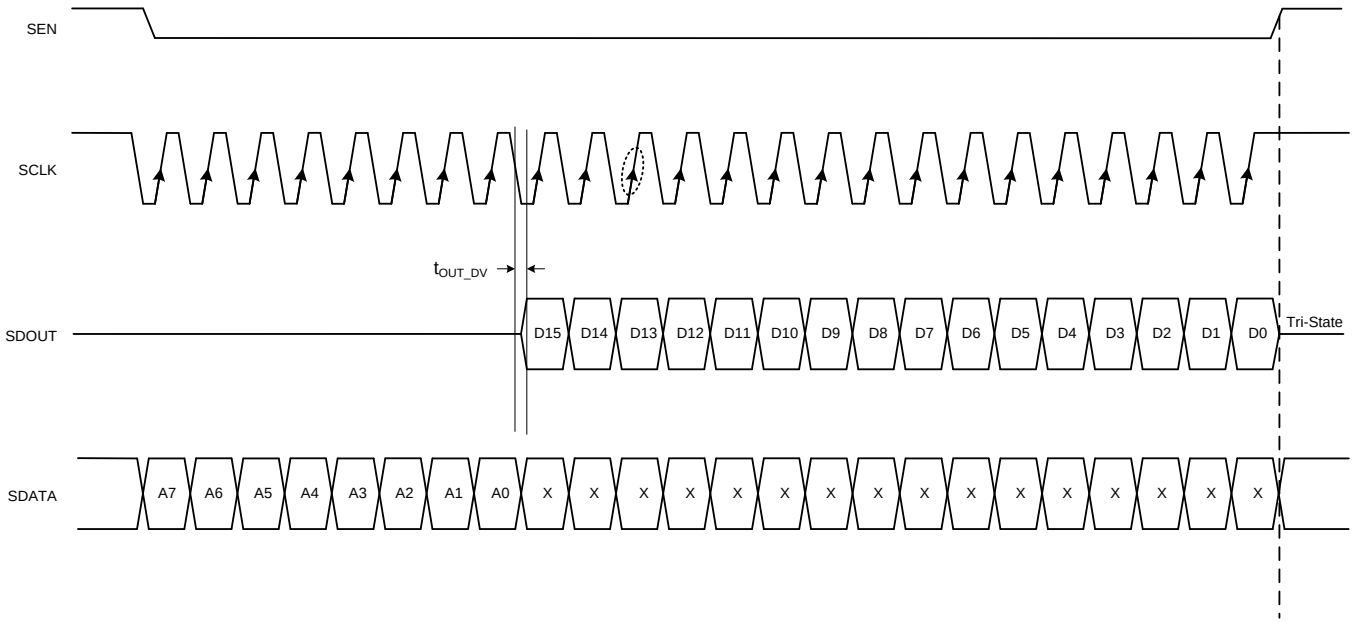

Figure 31. Serial Interface Register Read Timing Diagram

Copyright © 2015, Texas Instruments Incorporated

An example of a read operation is shown in Figure 32.

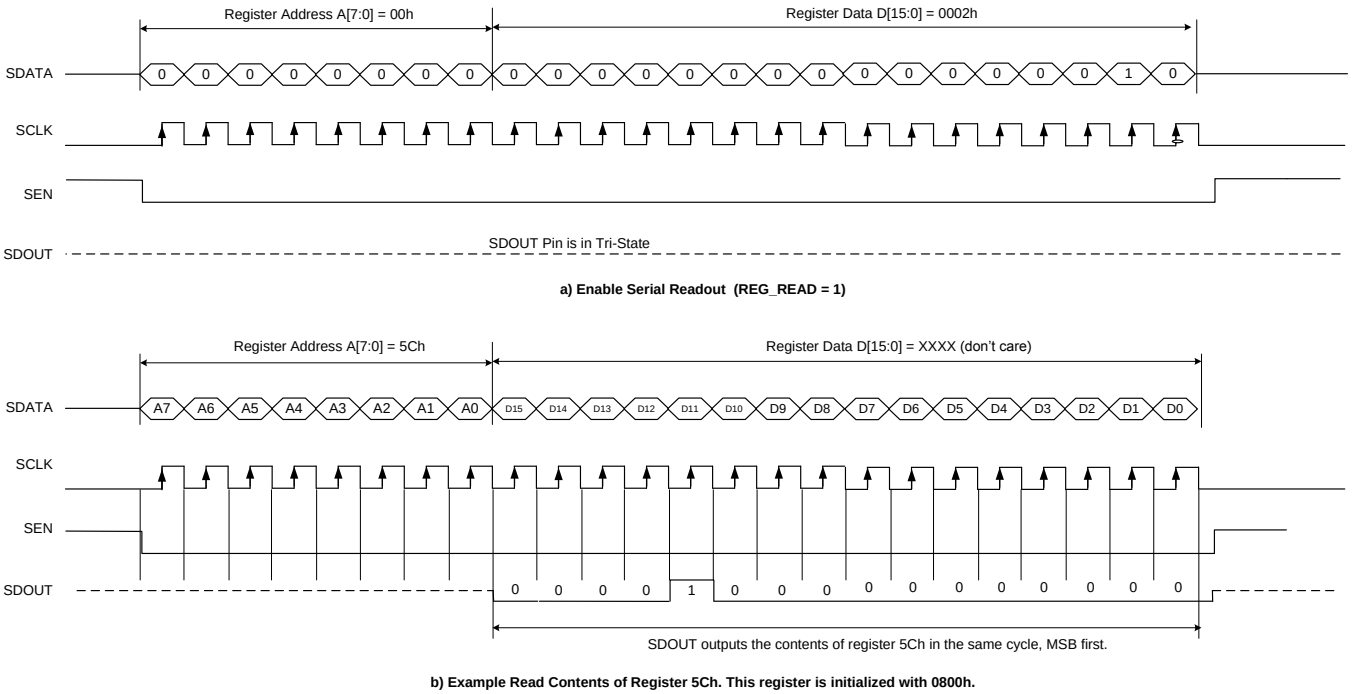

Figure 32. Serial Readout Function Timing Diagrams

Data from multiple registers can be read without having to set and reset the REG_READ bit after each register read.

7.6 Register Map

The AFE2256 register space is organized as 16-bit words addressable with an 8-bit address. The serial interface is used to write and read from this register space.

1. On reset, the values of all registers go to 0.
2. Contents of the register map are not affected during Nap or power-down.
3. Contents of the register map are corrupted if AVDD1, AVDD2 are removed.

7.6.1 Serial Interface Register Map

Table 15. Register Map

ADDRESS (Hex)	15	14	13	12	11	10	9	8	7	6	5	4	3	2	1	0
00h	0	0	0	0	0	0	0	0	0	0	0	0	0	0	REG_ READ	RESET
10h	0	0	0	0	CONFIG_ MODE	0	TEST_PATTERN_SEL					0	0	0	0	0
11h	REVERSE_ SCAN	0	AUTO_ REVERSE	0	0	ESSENTIAL _BIT1	0	0	0	0	STR		0	0	0	0
12h	0	ESSENTIAL _BIT2	0	0	0	0	0	0	0	0	0	0	0	0	0	0
13h	POWER_DOWN															
16h	0	0	0	0	0	0	0	0	ESSENTIAL_BITS5		0	0	ESSENTIAL _BIT6	0	0	0
18h	0	0	0	0	0	0	0	0	0	0	0	0	0	0	0	ESSENTIAL _BIT3
30h	0	0	0	0	0	0	0	0	0	0	0	0	0	0	TRIM_ LOAD	0
31h	DIE_ID[47:32]															
32h	DIE_ID[31:16]															
33h	DIE_ID[15:0]															
40h	IRST_RISE								IRST_FALL							
42h	SHR_RISE								SHR_FALL							
43h	SHS_RISE								SHS_FALL							
46h	LPF1_RISE								LPF1_FALL							
47h	LPF2_RISE								LPF2_FALL							
4Ah	TDEF_RISE								TDEF_FALL							
4Bh	GATE_DRIVER_RISE								GATE_DRIVER_FALL							
50h	DF_SM0_RISE								DF_SM0_FALL							
51h	DF_SM1_RISE								DF_SM1_FALL							
52h	DF_SM2_RISE								DF_SM2_FALL							
53h	DF_SM3_RISE								DF_SM3_FALL							
54h	DF_SM4_RISE								DF_SM4_FALL							
55h	DF_SM5_RISE								DF_SM5_FALL							
5Ah	0	0	0	0	0	0	0	0	PROBE_SIGNAL							
5Ch	INPUT_CHARGE_RANGE					0	LPF1_FREQ				0	LPF2_FREQ				0
5Dh	BIAS_ PANEL 2COMP	ISOLATE_ PANEL	0	ADD_CAP		ENB_TDEF	ENB_DFTV _ALL	DFTV_CAP _SEL_5	DFTV_CAP _SEL_4	DFTV_CAP _SEL_3	DFTV_CAP _SEL_2	DFTV_CAP _SEL_1	DFTV_CAP _SEL_0	0	POWER_ MODE	0
61h	0	ESSENTIAL _BIT4	0	0	0	0	0	0	0	0	0	0	0	0	0	0

Copyright © 2015, Texas Instruments Incorporated

7.6.2 Register Descriptions

7.6.2.1 Register 0h (address = 0h)

Figure 33. Register 0h

15	14	13	12	11	10	9	8
0	0	0	0	0	0	0	0
W-0h	W-0h	W-0h	W-0h	W-0h	W-0h	W-0h	W-0h
7	6	5	4	3	2	1	0
0	0	0	0	0	0	REG_READ	RESET
W-0h	W-0h	W-0h	W-0h	W-0h	W-0h	W-0h	W-0h

LEGEND: W = Write only; -n = reset value

Table 16. Register 0h Field Descriptions

Bit	Field	Type	Reset	Description
15-2	0	W	0h	Must write 0
1	REG_READ	W	0h	0 = Register read disabled 1 = Register read enabled
0	RESET	W	0h	This bit self-clears in 200 ns. 0 = Normal operation 1 = Device reset

7.6.2.2 Register 10h (address = 10h)

Figure 34. Register 10h

15	14	13	12	11	10	9	8
0	0	0	0	CONFIG_MODE	0	TEST_PATTERN_SEL	
W-0h	W-0h	W-0h	W-0h	R/W-0h	W-0h	R/W-0h	
7	6	5	4	3	2	1	0
TEST_PATTERN_SEL			0	0	0	0	0
R/W-0h			W-0h	W-0h	W-0h	W-0h	W-0h

LEGEND: R/W = Read/Write; W = Write only; -n = reset value

Table 17. Register 10h Field Descriptions

Bit	Field	Type	Reset	Description
15-12	0	W	0h	Must write 0
11	CONFIG_MODE	R/W	0h	0 = CONFIG_MODE 0 1 = CONFIG_MODE 1 See the *Alignment Vector* section for more details.
10	0	W	0h	Must write 0
9-5	TEST_PATTERN_SEL	R/W	0h	0h = Normal data, all test patterns are disabled 11h = Row-column counter test pattern 13h = Ramp test pattern 17h = All zeros test pattern 19h = All ones test pattern 1Eh = Sync/deskew test pattern
4-0	0	W	0h	Must write 0

7.6.2.3 Register 11h (address = 11h)

Figure 35. Register 11h

15	14	13	12	11	10	9	8
REVERSE_ SCAN	0	AUTO_ REVERSE	0	0	ESSENTIAL_ BIT1	0	0
R/W-0h	W-0h	R/W-0h	W-0h	W-0h	R/W-0h	W-0h	W-0h
7	6	5	4	3	2	1	0
0	0	STR		0	0	0	0
W-0h	W-0h	R/W-0h		W-0h	W-0h	W-0h	W-0h

LEGEND: R/W = Read/Write; W = Write only; -n = reset value

Table 18. Register 11h Field Descriptions

Bit	Field	Type	Reset	Description
15	REVERSE_SCAN	R/W	0h	0 = Forward scan mode 1 = Reverse scan mode
14	0	W	0h	Must write 0
13	AUTO_REVERSE	R/W	0h	0 = Auto-reverse disabled 1 = Auto-reverse enabled
12-11	0	W	0h	Must write 0
10	ESSENTIAL_BIT1	R/W	0h	Must write 1
9-6	0	W	0h	Must write 0
5-4	STR	R/W	0h	Scan period setting. These bits set the number of MCLKs in one line time and thus set the data conversion rate. 0h = 256 MCLKs 1h = 512 MCLKs 2h = 1024 MCLKs 3h = 2048 MCLKs
3-0	0	W	0h	Must write 0

7.6.2.4 Register 12h (address = 12h)

Figure 36. Register 12h

15	14	13	12	11	10	9	8
0	ESSENTIAL_BIT2	0	0	0	0	0	0
W-0h	R/W-0h	W-0h	W-0h	W-0h	W-0h	W-0h	W-0h
7	6	5	4	3	2	1	0
0	0	0	0	0	0	0	0
W-0h	W-0h	W-0h	W-0h	W-0h	W-0h	W-0h	W-0h

LEGEND: R/W = Read/Write; W = Write only; -n = reset value

Table 19. Register 12h Field Descriptions

Bit	Field	Type	Reset	Description
15	0	W	0h	Must write 0
14	ESSENTIAL_BIT2	R/W	0h	Must write 1
13-0	0	W	0h	Must write 0

Copyright © 2015, Texas Instruments Incorporated

7.6.2.5 Register 13h (address = 13h)

Figure 37. Register 13h

15	14	13	12	11	10	9	8
POWER DOWN							
R/W-0h							
7	6	5	4	3	2	1	0
POWER DOWN							
R/W-0h							

LEGEND: R/W = Read/Write; -n = reset value

Table 20. Register 13h Field Descriptions

Bit	Field	Type	Reset	Description
15-0	POWER DOWN	R/W	0h	0 = Active mode F827h = Nap mode with PLL on F8A7h = Nap mode FD3Fh = Power-down with PLL on FFBFh = Power-down 20h = Quick wakeup

7.6.2.6 Register 16h (address = 16h)

Figure 38. Register 16h

15	14	13	12	11	10	9	8
0	0	0	0	0	0	0	0
W-0h	W-0h	W-0h	W-0h	W-0h	W-0h	W-0h	W-0h
7	6	5	4	3	2	1	0
ESSENTIAL_BITS5		0	0	ESSENTIAL_BIT6	0	0	0
R/W-0h		W-0h	W-0h	R/W-0h	W-0h	W-0h	W-0h

LEGEND: R/W = Read/Write; W = Write only; -n = reset value

Table 21. Register 16h Field Descriptions

Bit	Field	Type	Reset	Description
15-8	0	W	0h	Must write 0
7-6	ESSENTIAL_BITS5	R/W	0h	Must write 11b
5-4	0	W	0h	Must write 0
3	ESSENTIAL_BIT6	R/W	0h	0 = Normal-power mode 1 = Low-noise mode
2-0	0	W	0h	Must write 0

7.6.2.7 Register 18h (address = 18h)

Figure 39. Register 18h

15	14	13	12	11	10	9	8
0	0	0	0	0	0	0	0
W-0h	W-0h	W-0h	W-0h	W-0h	W-0h	W-0h	W-0h
7	6	5	4	3	2	1	0
0	0	0	0	0	0	0	ESSENTIAL_BIT3
W-0h	W-0h	W-0h	W-0h	W-0h	W-0h	W-0h	R/W-0h

LEGEND: R/W = Read/Write; W = Write only; -n = reset value

Table 22. Register 18h Field Descriptions

Bit	Field	Type	Reset	Description
15-1	0	W	0h	Must write 0
0	ESSENTIAL_BIT3	R/W	0h	Must write 1

7.6.2.8 Register 30h (address = 30h)

Figure 40. Register 30h

15	14	13	12	11	10	9	8
0	0	0	0	0	0	0	0
W-0h	W-0h	W-0h	W-0h	W-0h	W-0h	W-0h	W-0h
7	6	5	4	3	2	1	0
0	0	0	0	0	0	TRIM_LOAD	0
W-0h	W-0h	W-0h	W-0h	W-0h	W-0h	R/W-0h	W-0h

LEGEND: R/W = Read/Write; W = Write only; -n = reset value

Table 23. Register 30h Field Descriptions

Bit	Field	Type	Reset	Description
15-2	0	W	0h	Must write 0
1	TRIM_LOAD	R/W	0h	A TRIM_LOAD cycle is mandatory to meet specified performance. 0 = Disable TRIM_LOAD 1 = Enable TRIM_LOAD
0	0	W	0h	Must write 0

7.6.2.9 Register 31h (address = 31h)

Figure 41. Register 31h

15	14	13	12	11	10	9	8
DIE_ID[47:40]							
R-N/A							
7	6	5	4	3	2	1	0
DIE_ID [39:32]							
R-N/A							

LEGEND: R = Read only; -n = reset value

Table 24. Register 31h Field Descriptions

Bit	Field	Type	Reset	Description
15-0	DIE_ID[47:32]	R	N/A	Most significant word (16 bits) of the unique 48-bit identifier for the die.

Copyright © 2015, Texas Instruments Incorporated

7.6.2.10 Register 32h (address = 32h)

Figure 42. Register 32h

15	14	13	12	11	10	9	8
DIE_ID[31:24]							
R-N/A							
7	6	5	4	3	2	1	0
DIE_ID[21:16]							
R-N/A							

LEGEND: R = Read only; -n = reset value

Table 25. Register 32h Field Descriptions

Bit	Field	Type	Reset	Description
15-0	DIE_ID[31:16]	R	N/A	Middle word (16 bits) of the unique 48-bit identifier for the die.

7.6.2.11 Register 33h (address = 33h)

Figure 43. Register 33h

15	14	13	12	11	10	9	8
DIE_ID[15:8]							
R-N/A							
7	6	5	4	3	2	1	0
DIE_ID[7:0]							
R-N/A							

LEGEND: R = Read only; -n = reset value

Table 26. Register 33h Field Descriptions

Bit	Field	Type	Reset	Description
15-0	DIE_ID[15:0]	R	N/A	Least significant word (16 bits) of the unique 48-bit identifier for the die.

7.6.2.12 Register 40h (address = 40h)

Figure 44. Register 40h

15	14	13	12	11	10	9	8
IRST_RISE							
R/W-0h							
7	6	5	4	3	2	1	0
IRST_FALL							
R/W-0h							

LEGEND: R/W = Read/Write; -n = reset value

Table 27. Register 40h Field Descriptions

Bit	Field	Type	Reset	Description
15-8	IRST_RISE	R/W	0h	Rising edge location for the integrator feedback capacitor reset.
7-0	IRST_FALL	R/W	0h	Falling edge location for the integrator feedback capacitor reset.

7.6.2.13 Register 42h (address = 42h)

Figure 45. Register 42h

15	14	13	12	11	10	9	8
SHR_RISE							
R/W-0h							
7	6	5	4	3	2	1	0
SHR_FALL							
R/W-0h							

LEGEND: R/W = Read/Write; -n = reset value

Table 28. Register 42h Field Descriptions

Bit	Field	Type	Reset	Description
15-8	SHR_RISE	R/W	0h	Rising edge location for the reset sampling phase.
7-0	SHR_FALL	R/W	0h	Falling edge location for the reset sampling phase.

7.6.2.14 Register 43h (address = 43h)

Figure 46. Register 43h

15	14	13	12	11	10	9	8
SHS_RISE							
R/W-0h							
7	6	5	4	3	2	1	0
SHS_FALL							
R/W-0h							

LEGEND: R/W = Read/Write; -n = reset value

Table 29. Register 43h Field Descriptions

Bit	Field	Type	Reset	Description
15-8	SHS_RISE	R/W	0h	Rising edge location for the signal sampling phase.
7-0	SHS_FALL	R/W	0h	Falling edge location for the signal sampling phase.

7.6.2.15 Register 46h (address = 46h)

Figure 47. Register 46h

15	14	13	12	11	10	9	8
LPF1_RISE							
R/W-0h							
7	6	5	4	3	2	1	0
LPF1_FALL							
R/W-0h							

LEGEND: R/W = Read/Write; -n = reset value

Table 30. Register 46h Field Descriptions

Bit	Field	Type	Reset	Description
15-8	LPF1_RISE	R/W	0h	Reset sample filter turn-on edge.
7-0	LPF1_FALL	R/W	0h	Reset sample filter turn-off edge.

Copyright © 2015, Texas Instruments Incorporated

7.6.2.16 Register 47h (address = 47h)

Figure 48. Register 47h

15	14	13	12	11	10	9	8
LPF2_RISE							
R/W-0h							
7	6	5	4	3	2	1	0
LPF2_FALL							
R/W-0h							

LEGEND: R/W = Read/Write; -n = reset value

Table 31. Register 47h Field Descriptions

Bit	Field	Type	Reset	Description
15-8	LPF2_RISE	R/W	0h	Signal sample filter turn-on edge.
7-0	LPF2_FALL	R/W	0h	Signal sample filter turn-off edge.

7.6.2.17 Register 4Ah (address = 4Ah)

Figure 49. Register 4Ah

15	14	13	12	11	10	9	8
TDEF_RISE							
R/W-0h							
7	6	5	4	3	2	1	0
TDEF_FALL							
R/W-0h							

LEGEND: R/W = Read/Write; -n = reset value

Table 32. Register 4Ah Field Descriptions

Bit	Field	Type	Reset	Description
15-8	TDEF_RISE	R/W	0h	Pixel short-detection enable edge; see the *Pixel Short Detection* section for more details.
7-0	TDEF_FALL	R/W	0h	Pixel short-detection disable edge; see the *Pixel Short Detection* section for more details.

7.6.2.18 Register 4Bh (address = 4Bh)

Figure 50. Register 4Bh

15	14	13	12	11	10	9	8
GATE_DRIVER_RISE							
R/W-0h							
7	6	5	4	3	2	1	0
GATE_DRIVER_FALL							
R/W-0h							

LEGEND: R/W = Read/Write; -n = reset value

Table 33. Register 4Bh Field Descriptions

Bit	Field	Type	Reset	Description
15-8	GATE_DRIVER_RISE	R/W	0h	Rising edge location for the gate driver signal; see the *Generating Gate Driver Signals from the AFE2256* section for more details.
7-0	GATE_DRIVER_FALL	R/W	0h	Falling edge location for the gate driver signal; see the *Generating Gate Driver Signals from the AFE2256* section for more details.

Copyright © 2015, Texas Instruments Incorporated

7.6.2.19 Register 50h (address = 50h)

Figure 51. Register 50h

15	14	13	12	11	10	9	8
DF_SM0_RISE							
R/W-0h							
7	6	5	4	3	2	1	0
DF_SM0_FALL							
R/W-0h							

LEGEND: R/W = Read/Write; -n = reset value

Table 34. Register 50h Field Descriptions

Bit	Field	Type	Reset	Description
15-8	DF_SM0_RISE	R/W	0h	Charge dump control for the 0.045-pF capacitor rising edge. When DF_SM[0] = 1, the capacitor is connected to COMP2.
7-0	DF_SM0_FALL	R/W	0h	Charge dump control for the 0.045-pF capacitor falling edge. When DF_SM[0] = 0, the capacitor is connected to COMP1.

7.6.2.20 Register 51h (address = 51h)

Figure 52. Register 51h

15	14	13	12	11	10	9	8
DF_SM1_RISE							
R/W-0h							
7	6	5	4	3	2	1	0
DF_SM1_FALL							
R/W-0h							

LEGEND: R/W = Read/Write; -n = reset value

Table 35. Register 51h Field Descriptions

Bit	Field	Type	Reset	Description
15-8	DF_SM1_RISE	R/W	0h	Charge dump control for the 0.122 pF-capacitor rising edge. When DF_SM[1] = 1, the capacitor is connected to COMP2.
7-0	DF_SM1_FALL	R/W	0h	Charge dump control for the 0.122 pF-capacitor falling edge. When DF_SM[1] = 0, the capacitor is connected to COMP1.

Copyright © 2015, Texas Instruments Incorporated

7.6.2.21 Register 52h (address = 52h)

Figure 53. Register 52h

15	14	13	12	11	10	9	8
DF_SM2_RISE							
R/W-0h							
7	6	5	4	3	2	1	0
DF_SM2_FALL							
R/W-0h							

LEGEND: R/W = Read/Write; -n = reset value

Table 36. Register 52h Field Descriptions

Bit	Field	Type	Reset	Description
15-8	DF_SM2_RISE	R/W	0h	Charge dump control for the 0.33-pF capacitor rising edge. When DF_SM[2] = 1, the capacitor is connected to COMP2.
7-0	DF_SM2_FALL	R/W	0h	Charge dump control for the 0.33-pF capacitor falling edge. When DF_SM[2] = 0, the capacitor is connected to COMP1.

7.6.2.22 Register 53h (address = 53h)

Figure 54. Register 53h

15	14	13	12	11	10	9	8
DF_SM3_RISE							
R/W-0h							
7	6	5	4	3	2	1	0
DF_SM3_FALL							
R/W-0h							

LEGEND: R/W = Read/Write; -n = reset value

Table 37. Register 53h Field Descriptions

Bit	Field	Type	Reset	Description
15-8	DF_SM3_RISE	R/W	0h	Charge dump control for the 0.9-pF capacitor rising edge. When DF_SM[3] = 1, the capacitor is connected to COMP2.
7-0	DF_SM3_FALL	R/W	0h	Charge dump control for the 0.9-pF capacitor falling edge. When DF_SM[3] = 0, the capacitor is connected to COMP1.

7.6.2.23 Register 54h (address = 54h)

Figure 55. Register 54h

15	14	13	12	11	10	9	8
DF_SM4_RISE							
R/W-0h							
7	6	5	4	3	2	1	0
DF_SM4_FALL							
R/W-0h							

LEGEND: R/W = Read/Write; -n = reset value

Table 38. Register 54h Field Descriptions

Bit	Field	Type	Reset	Description
15-8	DF_SM4_RISE	R/W	0h	Charge dump control for the 2.44-pF capacitor rising edge. When DF_SM[4] = 1, the capacitor is connected to COMP2.
7-0	DF_SM4_FALL	R/W	0h	Charge dump control for the 2.44-pF capacitor falling edge. When DF_SM[4] = 0, the capacitor is connected to COMP1.

7.6.2.24 Register 55h (address = 55h)

Figure 56. Register 55h

15	14	13	12	11	10	9	8
DF_SM5_RISE							
R/W-0h							
7	6	5	4	3	2	1	0
DF_SM5_FALL							
R/W-0h							

LEGEND: R/W = Read/Write; -n = reset value

Table 39. Register 55h Field Descriptions

Bit	Field	Type	Reset	Description
15-8	DF_SM5_RISE	R/W	0h	Charge dump control for the 1.2-pF capacitor rising edge. When DF_SM[5] = 1, the capacitor is connected to COMP4.
7-0	DF_SM5_FALL	R/W	0h	Charge dump control for the 1.2-pF capacitor falling edge. When DF_SM[5] = 0, the capacitor is connected to COMP3.

Copyright © 2015, Texas Instruments Incorporated

7.6.2.25 Register 5Ah (address = 5Ah)

Figure 57. Register 5Ah

15	14	13	12	11	10	9	8
0	0	0	0	0	0	0	0
W-0h	W-0h	W-0h	W-0h	W-0h	W-0h	W-0h	W-0h
7	6	5	4	3	2	1	0
PROBE_SIGNAL							
R/W-0h							

LEGEND: R/W = Read/Write; W = Write only; -n = reset value

Table 40. Register 5Ah Field Descriptions

Bit	Field	Type	Reset	Description
15-8	0	W	0h	Must write 0
7-0	PROBE_SIGNAL	R/W	0h	These bits bring out some TG signals onto the SDOUT pin; see the *TG Signal Probe* section for more details. 0h = None 1h = PROBE IRST signal 4h = PROBE SHR signal 8h = PROBE SHS signal 20h = PROBE DF_SM0 signal 40h = PROBE GATE DRIVER signal

7.6.2.26 Register 5Ch (address = 5Ch)

Figure 58. Register 5Ch

15	14	13	12	11	10	9	8
INPUT_CHARGE_RANGE					0	LPF1_FREQ	
R/W-0h					W-0h	R/W-0h	
7	6	5	4	3	2	1	0
LPF1_FREQ		0	LPF2_FREQ				0
R/W-0h		W-0h	R/W-0h				W-0h

LEGEND: R/W = Read/Write; W = Write only; -n = reset value

Table 41. Register 5Ch Field Descriptions

Bit	Field	Type	Reset	Description
15-11	INPUT_CHARGE_RANGE	R/W	0h	These bits select the full-scale input charge range. 1h = 0.6 pC 2h = 1.2 pC 4h = 2.4 pC 8h = 4.8 pC Ch = 7.2 pC 1Fh = 9.6 pC
10	0	W	0h	Must write 0
9-6	LPF1_FREQ	R/W	0h	0h = f_{LPF1} is 210 kHz 1h = f_{LPF1} is 105 kHz 3h = f_{LPF1} is 52 kHz 7h = f_{LPF1} is 26 kHz Fh = f_{LPF1} is 13 kHz
5	0	W	0h	Must write 0
4-1	LPF2_FREQ	R/W	0h	0h = f_{LPF2} is 210 kHz 1h = f_{LPF2} is 105 kHz 3h = f_{LPF2} is 52 kHz 7h = f_{LPF2} is 26 kHz Fh = f_{LPF2} is 13 kHz
0	0	W	0h	Must write 0

Copyright © 2015, Texas Instruments Incorporated

7.6.2.27 Register 5Dh (address = 5Dh)

Figure 59. Register 5Dh

15	14	13	12	11	10	9	8
BIAS_PANEL2 COMP	ISOLATE_ PANEL	0	ADD_CAP		ENB_TDEF	ENB_DFTV_ ALL	DFTV_CAP_ SEL_5
R/W-0h	R/W-0h	W-0h	R/W-0h		R/W-0h	R/W-0h	R/W-0h
7	6	5	4	3	2	1	0
DFTV_CAP_ SEL_4	DFTV_CAP_ SEL_3	DFTV_CAP_ SEL_2	DFTV_CAP_ SEL_1	DFTV_CAP_ SEL_0	0	POWER_ MODE	0
R/W-0h	R/W-0h	R/W-0h	R/W-0h	R/W-0h	W-0h	R/W-0h	W-0h

LEGEND: R/W = Read/Write; W = Write only; -n = reset value

Table 42. Register 5Dh Field Descriptions

Bit	Field	Type	Reset	Description
15	BIAS_PANEL2COMP	R/W	0h	0 = Bias to EXTC_I 1 = Bias to COMP3; the voltage that the panel is biased to during panel isolation is changed to COMP3 instead of EXTC_I
14	ISOLATE_PANEL	R/W	0h	0 = Connect panel 1 = Isolate panel; all input switches are opened and the panel is biased to EXTC_I or COMP3 (selection is based on BIAS_PANEL2COMP) See the *Isolate Panel* section for more details.
13	0	W	0h	Must write 0
12-11	ADD_CAP	R/W	0h	These bits control the value of the internal data line capacitor at the integrator inputs. ADD_CAP is used to emulate data line capacitance; see the *C_{sensor} Emulation* section for more details. 0h = No capacitor 1h = 20 pF 2h = 30 pF 3h = 50 pF
10	ENB_TDEF	R/W	0h	0 = Pixel short detection disabled 1 = Pixel short detection enabled; the pixel short-detection circuit is enabled
9	ENB_DFTV_ALL	R/W	0h	This bit is ANDed with dftv_cap_sel_n and therefore functions as the master control on charge dump. 0 = Charge dump disabled 1 = Charge dump enabled
8	DFTV_CAP_SEL_5	R/W	0h	This bit enables the 1.2-pF charge dump capacitor. Charge dump occurs with the COMP3 and COMP4 voltages. 0 = C[5] is 1.2 pF, disabled 1 = C[5] is 1.2 pF, enabled
7	DFTV_CAP_SEL_4	R/W	0h	This bit enables the 2.44-pF charge dump capacitor. Charge dump occurs with the COMP1 and COMP2 voltages. 0 = C[4] is 2.44 pF, disabled 1 = C[4] is 2.44 pF, enabled
6	DFTV_CAP_SEL_3	R/W	0h	This bit enables the 0.9-pF charge dump capacitor. Charge dump occurs with the COMP1 and COMP2 voltages. 0 = C[3] is 0.9 pF, disabled 1 = C[3] is 0.9 pF, enabled
5	DFTV_CAP_SEL_2	R/W	0h	This bit enables the 0.33-pF charge dump capacitor. Charge dump occurs with the COMP1 and COMP2 voltages. 0 = C[2] is 0.33 pF, disabled 1 = C[2] is 0.33 pF, enabled

Copyright © 2015, Texas Instruments Incorporated

Table 42. Register 5Dh Field Descriptions (continued)

Bit	Field	Type	Reset	Description
4	DFTV_CAP_SEL_1	R/W	0h	This bit enables the 0.122-pF charge dump capacitor. Charge dump occurs with the COMP1 and COMP2 voltages. 0 = C[1] is 0.122 pF, disabled 1 = C[1] is 0.122 pF, enabled
3	DFTV_CAP_SEL_0	R/W	0h	This bit enables the 0.045-pF charge dump capacitor. Charge dump occurs with the COMP1 and COMP2 voltages. 0 = C[0] is 0.045 pF, disabled 1 = C[0] is 0.045 pF, enabled
2	0	R/W	0h	Must write 0
1	POWER_MODE	R/W	0h	This bit controls the integrator power mode. 0 = Normal-power mode 1 = Low-noise mode
0	0	R/W	0h	Must write 0

7.6.2.28 Register 61h (address = 61h)

Figure 60. Register 61h

15	14	13	12	11	10	9	8
0	ESSENTIAL_BIT4	0	0	0	0	0	0
W-0h	R/W-0h	W-0h	W-0h	W-0h	W-0h	W-0h	W-0h
7	6	5	4	3	2	1	0
0	0	0	0	0	0	0	0
W-0h	W-0h	W-0h	W-0h	W-0h	W-0h	W-0h	W-0h

LEGEND: R/W = Read/Write; W = Write only; -n = reset value

Table 43. Register 61h Field Descriptions

Bit	Field	Type	Reset	Description
15	0	W	0h	Must write 0
14	ESSENTIAL_BIT4	R/W	0h	Must write 1
13-0	0	W	0h	Must write 0

8 Application and Implementation

NOTE

Information in the following applications sections is not part of the TI component specification, and TI does not warrant its accuracy or completeness. TI's customers are responsible for determining suitability of components for their purposes. Customers should validate and test their design implementation to confirm system functionality.

8.1 Application Information

8.1.1 Initialization Setup

8.1.1.1 Recommended Device Start-Up Sequence

The sequence for device start-up is:

1. Apply the power supplies: the AFE2256 uses two power supplies (AVDD1 and AVDD2). AVDD1 is recommended to be applied before AVDD2.
2. Apply MCLK and wait for the PLL lock (20 µs).
3. Register initialization is as explained in the *Register Initialization* section and discusses clearing the register space, loading the factory trim values, and the default register settings.
4. Program the registers (such as device settings and TG profiles).
5. Apply the TP_SEL, SYNC, and bit alignment (optional).
6. Start integration and readout.

   See Figure 61 for the recommended power-up sequence.

Copyright © 2015, Texas Instruments Incorporated

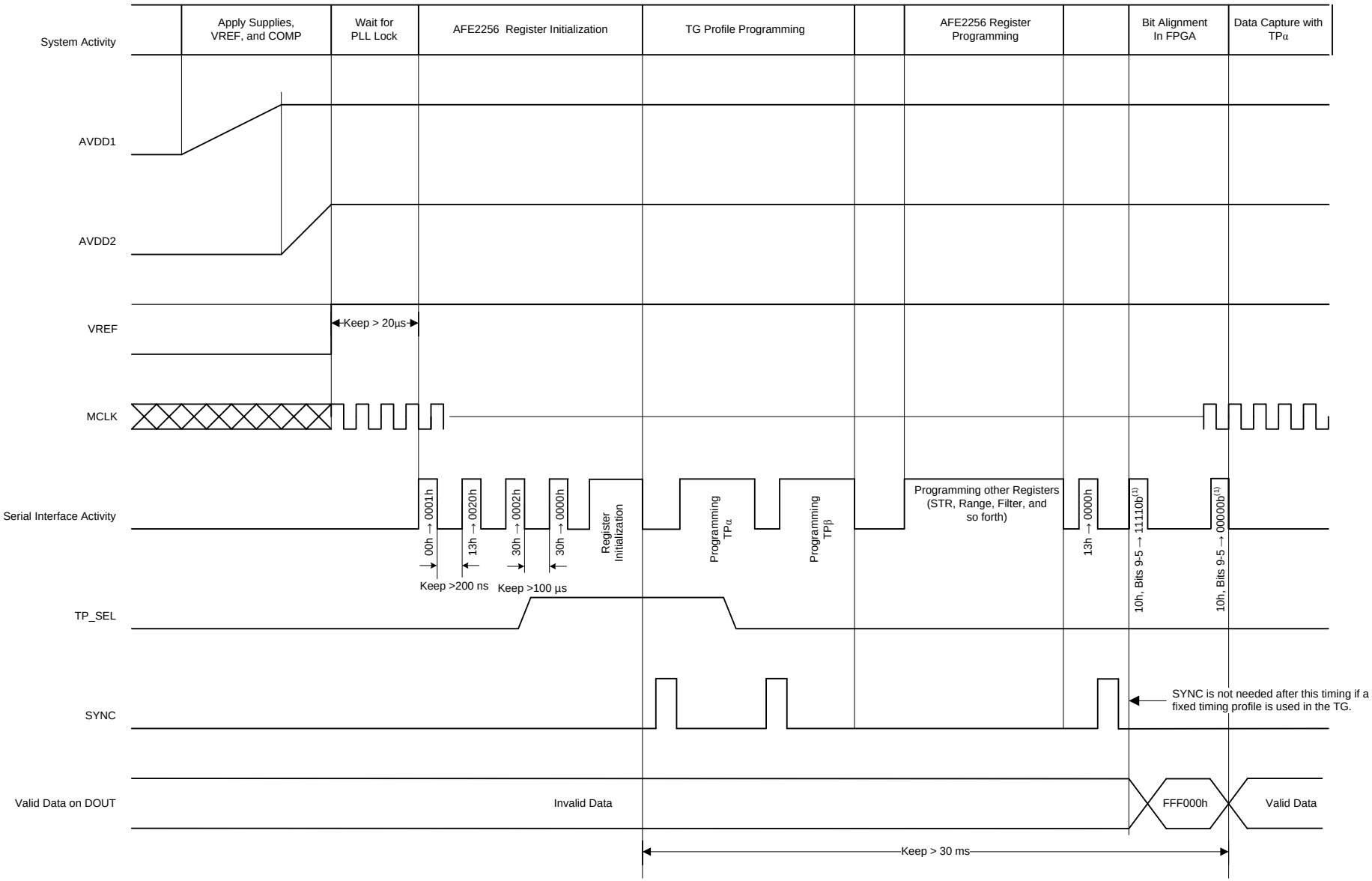

(1) Required if the sync/deskew test pattern is used for bit alignment in the FPGA.

Figure 61. AFE2256 Start-Up Sequence

8.1.1.2 Recommended Nap and Power-Down (PD) Entry, Exit Sequence

The AFE2256 offers two low-power modes (Nap and power-down), during which the signal chain or the entire device is powered down, respectively. Note that the contents of the register space and factory trim are not erased during the Nap and power-down modes. Figure 62 and Figure 63 show the recommended sequence for entering and exiting from Nap and PD modes.

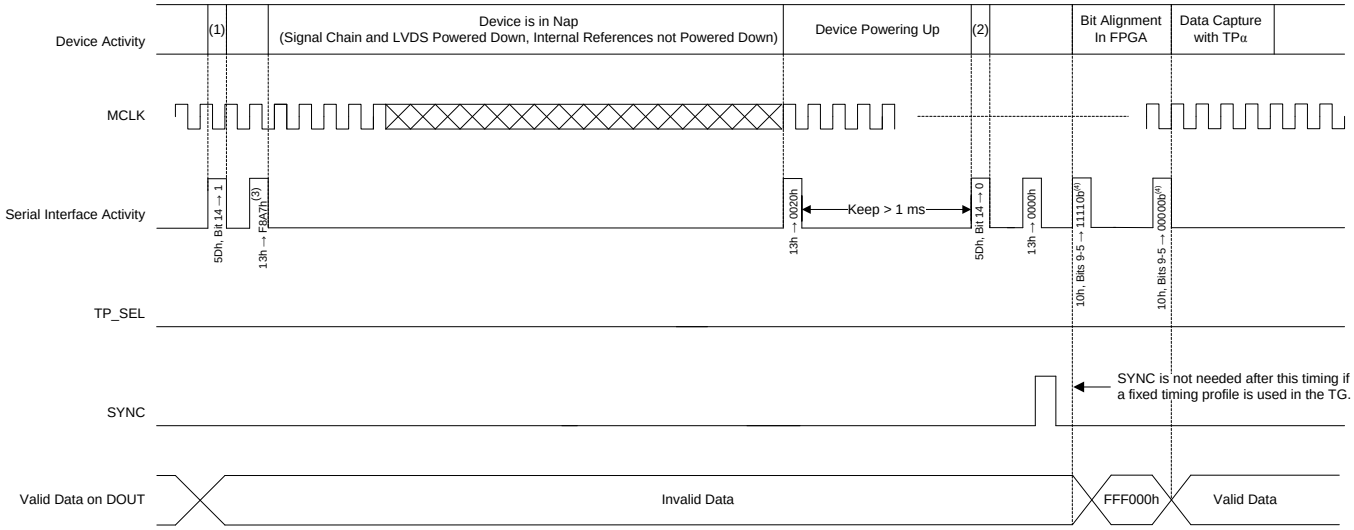

(1) All input switches are open.

(2) Connects the sensor to the integrators.

(3) If the PLL must remain active (for example, in cases where the AFE is configured to generate gate driver controls), set register 13h to F827h. Note that MCLK cannot be powered down in this case.

(4) Required if the sync/deskew test pattern is used for bit alignment in the FPGA.

Figure 62. Nap Entry and Exit Sequence

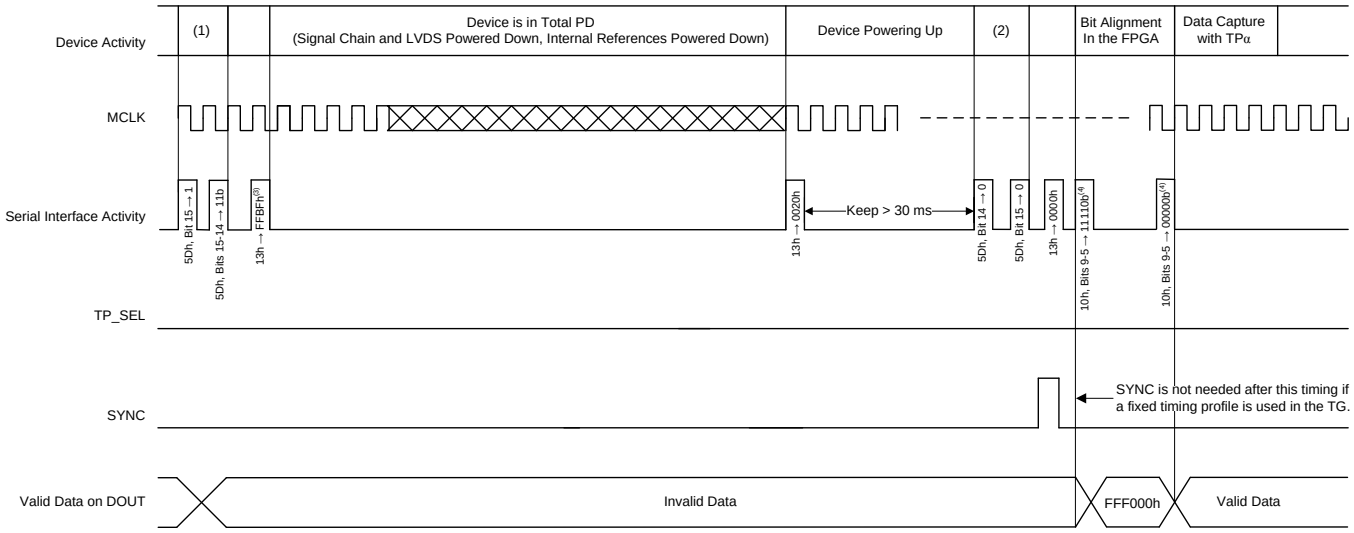

(1) All input switches are open.

(2) Disconnects the sensor from EXTC_I or COMP3 and connects the sensor to the integrators.

(3) If the PLL must remain active (for example, in cases where the AFE is configured to generate gate driver controls), set register 13h to FD3Fh. Note that MCLK cannot be powered down in this case.

(4) Required if the sync/deskew test pattern is used for bit alignment in the FPGA.

Figure 63. Power-Down Entry and Exit Sequence

Copyright © 2015, Texas Instruments Incorporated

8.1.2 Data Capture

The AFE2256 serially sends data from 256 channels over a single LVDS link. The data capture module (implemented in the FPGA) receives the serial data, deserializes the data into 24-bit words, and detects the start of a new scan line. The image generation logic receives data from multiple devices and generates the final image. The description of various blocks in the data capture module is shown in Table 44. See Figure 64 and Figure 65 for various data-processing blocks and their timings, respectively.

Table 44. Description of Various Blocks in Data Capture Module

BLOCK NAME	NUMBER OF INSTANCES IN THE FPGA	INPUT	OUTPUT	DESCRIPTION
Bit alignment	One per device	Serial data	24-bit parallel data	This block identifies the correct word boundaries in the serial bit stream; see the *Bit Alignment* section for more details.
Word alignment	One per device	Parallel 24-bit data, gate driver start signal	16-bit channel data, first channel (start of line) in signal	This block locates the first channel using the alignment vector and synchronizes data with the gate driver control.
Image generation	One per system (common across all devices)	16-bit channel data, first channel (start of line) signal from all devices	Final image	This block rearranges the channels and forms the image. The rearrangement algorithm can be implemented in hardware or software programs.

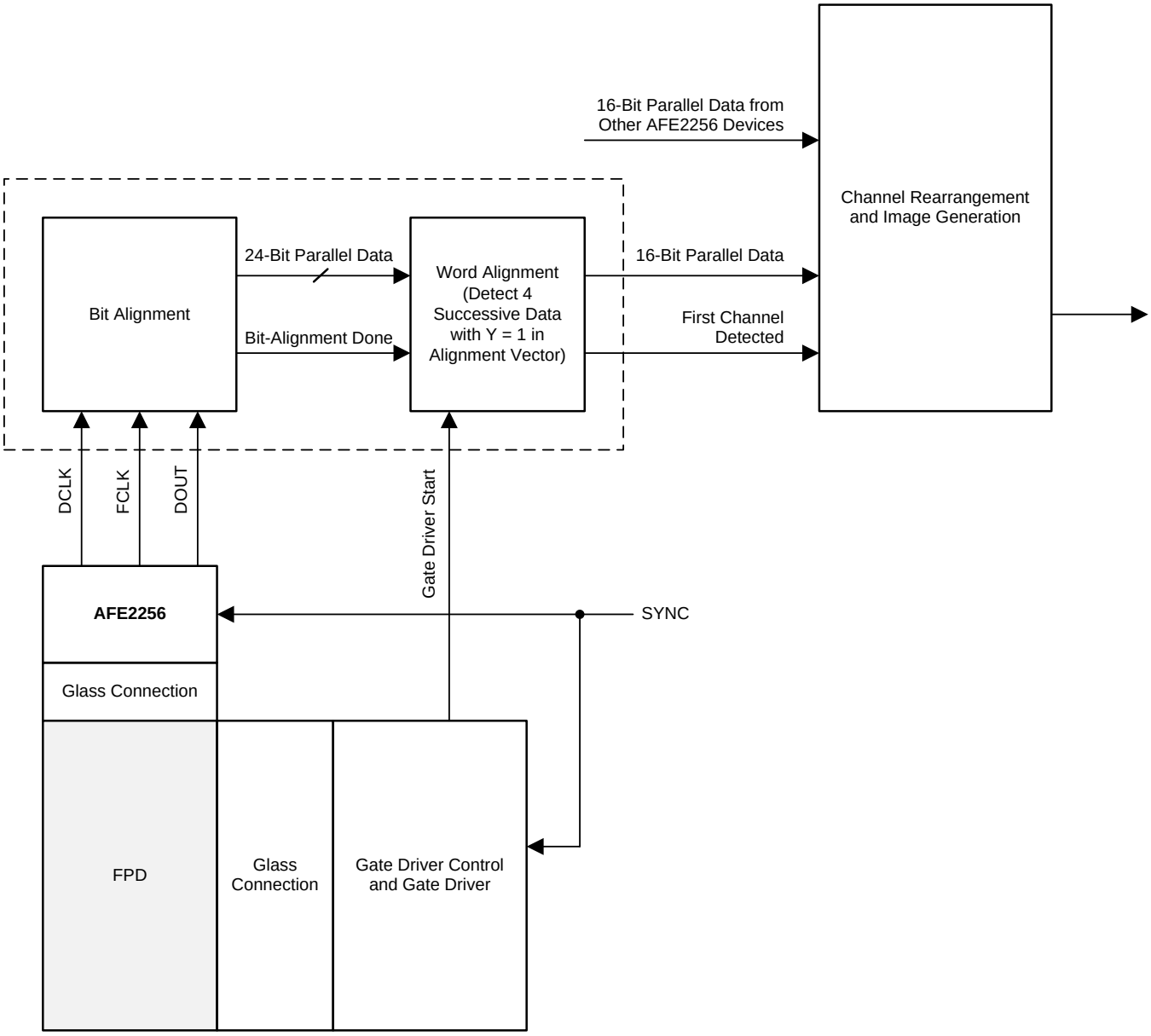

Figure 64. Data Capture Module Block Diagram

Copyright © 2015, Texas Instruments Incorporated

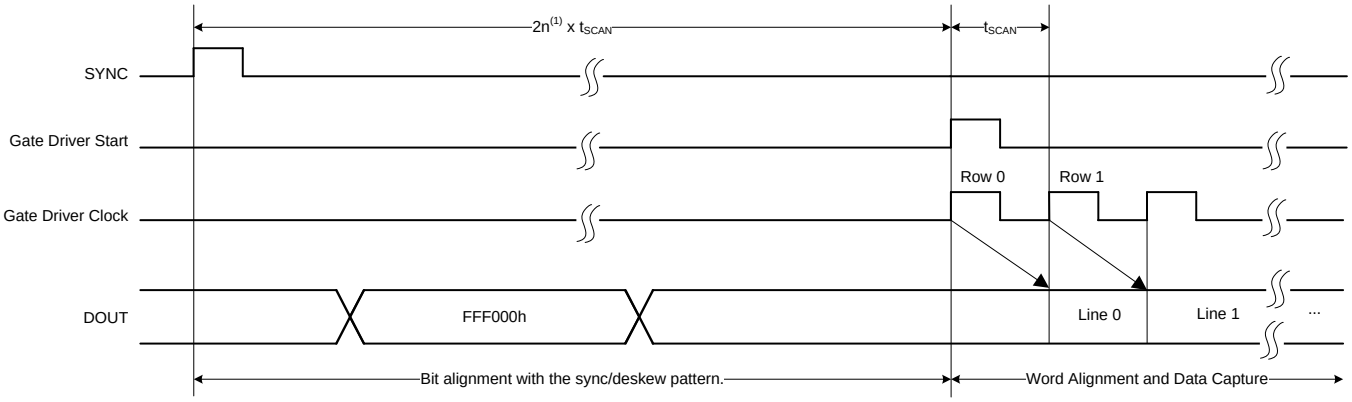

(1) n is an integer.

Figure 65. Data Capture Timing Diagram

8.1.2.1 Bit Alignment

Bit alignment can be done by using either of the following two methods:

- Using FCLK or
- Using the sync/deskew pattern.

8.1.2.1.1 Using FCLK

FCLK sends a fixed bit stream, FF0000h in STR = 0 and FFF000h for STR > 0. If FCLK is deserialized identical to DATA deserialization, then the parallel data has the same bit shift on the DATA and FCLK lines, assuming that delays are matched on the FCLK and DATA paths.

Figure 66 shows an example of bit alignment using FCLK for STR > 0. After deserialization, FCLK has a pattern of 7FF800h, indicating that a left-shift by 1 is required. Assuming no skew exists between FCLK and DATA, a 1-bit left-shift on the parallel DOUT gives the correct bit alignment.

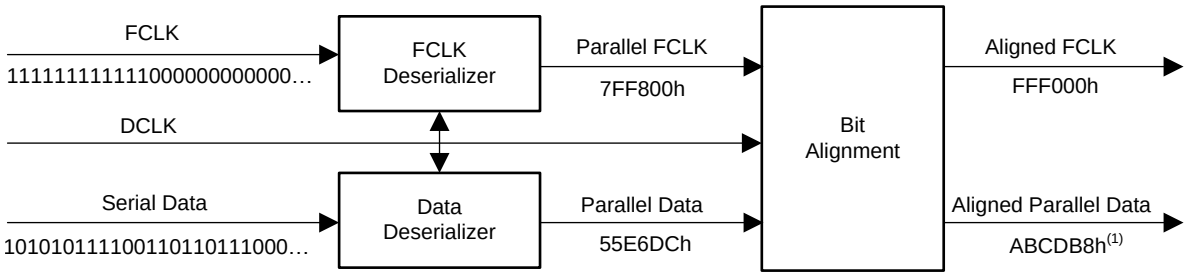

(1) The example shown is for CONFIG_MODE = 1.

Figure 66. Bit Alignment Using FCLK

As a result of trace routing length mismatch and FPGA buffer delay mismatch, there may be a skew between FCLK and DATA at the deserializer. This skew can be corrected during system calibration by adding an additional bit shift in the bit alignment block.

8.1.2.1.2 Using the Sync/Deskew Pattern

Figure 67 shows a block diagram of the sync/deskew pattern based on the bit-alignment technique. The device is configured to send a sync/deskew test pattern. After enabling the test pattern, the bit-alignment logic in the FPGA can be enabled by asserting Align_Enable = 1. The bit-alignment block compares parallel data with the 24-bit pattern FFF000h to determine the bit shift required for the correct bit alignment. After the bit alignment, the Align_Enable signal is deasserted to 0. The bit-alignment logic now holds the calculated bit-shift value. The device can be configured to send the normal channel data by disabling the test pattern. The bit-alignment logic applies the same bit shift to obtain the correct parallel data. Note that MCLK must not be disturbed between the alignment and data capture, otherwise the bit-alignment value can change.

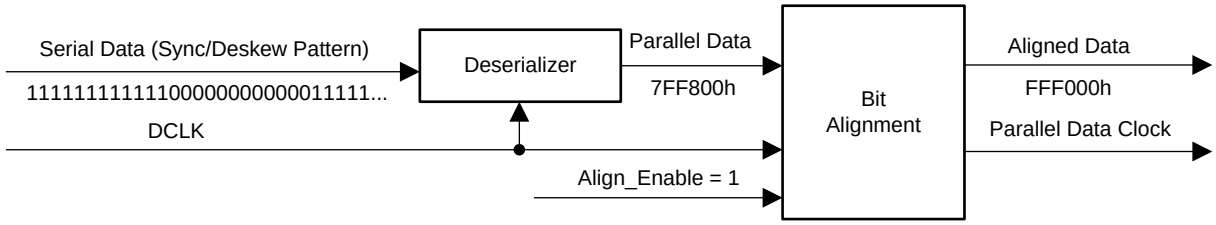

Figure 67. Bit Alignment Using the Sync/Deskew Pattern

8.1.2.2 Word Alignment

Word alignment is essential to identify the start of a new row in the parallel data stream. Consider the forward scan mode where channel data are in the following order: 0, 64, 128, 192, 1, 65, 129, 193, 2, 66, 130…63, 127, 191, 255; 0, 64, and so forth.

The AFE2256 sends an alignment vector, as described in the *Alignment Vector* section. Thus, in forward scan mode, the FPGA receives four successive samples with Y = 1 corresponding to the data of channels 0, 64, 128, and 192. Using this information the start of a row can be detected.

The gate driver start signal can be used to synchronize the gate driver signals and data capture. In such a case, the word alignment block gets the gate driver start signal as an input. Incoming data from the bit alignment block are ignored until the gate driver start is asserted. After asserting gate-start, the word-alignment block starts sending data to the image generation logic on the subsequent first channel.

Figure 68 shows the location of the first row with respect to the gate driver start signal. Data capture starts upon detection of four successive samples with Y = 1.

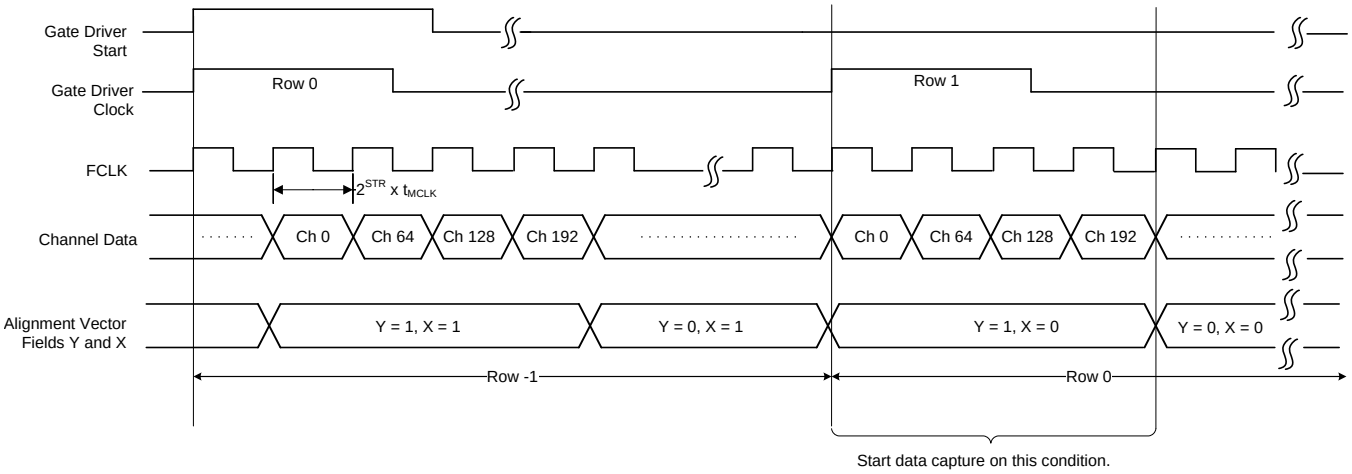

Figure 68. Word Alignment Timing Diagram

Copyright © 2015, Texas Instruments Incorporated

8.1.3 Generating Gate Driver Signals from the AFE2256

The AFE2256 provides a feature where gate driver control signals can be generated from the AFE2256. This feature is possible because the AFE2256 provides one fully-functional additional TG register for this purpose and the associated TG signal can be brought out on the SDOUT pin. This additional TG register is available in both timing profiles (TP_α and TP_β), just like the other TG signals.

In a typical application scenario, the SDOUT pin of the AFE2256 is routed to the FPGA or gate driver logic. The FPGA can directly send a signal on SDOUT to the gate driver or can process the signals further (such as counting the number of lines).

Note that each device can produce only one gate driver signal. which is not a limitation because a typical system has multiple AFE2256 devices and each device can provide a different signal on SDOUT. These signals are synchronized by the common SYNC signal. For example, one device can produce the gate output enable signal and other device can be configured to generate the gate driver clock. To use this scheme, the SDOUT signal from multiple devices must be independently routed to the FPGA.

If the SDOUT from a single device is connected to the FPGA, then the gate driver output enable signal can be generated from the device. Using this signal, other signals can be derived from inside the FPGA.

To generate gate driver signals from the AFE2256:

1. Configure the rising and falling edges of the gate driver signal with register 4Bh to select the timing profile. This configuration process is similar to programming any other timing signal (IRST, SHR, and so forth). Ensure that the correct timing profile is programmed and selected. the active-low gate driver signal can be generated by programming the rise edge > the falling edge.
2. The gate driver signal can be brought out on the SDOUT pin by configuring the PROBE_SIGNAL bits (register 5Ah, bits 7-0) = 40h.

8.1.3.1 Generating Gate Driver Signals in Power-Down, Nap Mode

The timing generator (TG) generates the internal timing and gate driver signals using the clock from the PLL. Thus, if the AFE2256 is required to generate the gate driver signals in power-down or Nap mode, the PLL must remain active during the power-down or Nap mode. Note that MCLK must be running for the gate driver signal generation.

To enter Nap mode with the gate driver signal generation continued, follow the same sequence as described in the *Recommended Nap and Power-Down (PD) Entry, Exit Sequence* section. Instead of configuring register 13h with F8A7h, program register 13h = F827h.

To enter power-down mode with the gate driver signal generation continued, follow the same sequence as described in the *Recommended Nap and Power-Down (PD) Entry, Exit Sequence* section. Instead of configuring register 13h with FFBFh, program register 13h = FD3Fh.

8.1.4 Cyclic Redundancy Check (CRC)

During data transfer, data can become corrupted because of environmental noise, timing errors in the FPGA, and so forth. The AFE2256 provides a data integrity check using the cyclic redundancy check (CRC).

The device computes a CRC as shown in Figure 69. For CRC computation, in Figure 69, the following data are considered as an example:

- ADC0 = 02A0E0h
- ADC1 = 01F4E0h
- ADC2 = 0279E0h
- ADC3 = 01F0E0h

Each ADCn corresponds to 16-bit data from the nth ADC appended with the alignment vector with CRC1 = CRC0 = 0. ADC0 to ADC3 data are appended to form the 96-bit message. Note that ADC3 data forms the 24 significant bits of the message.

CRC uses the polynomial divisor P = 97h. The computed CRC is inserted into the alignment vector, as shown in Figure 69.

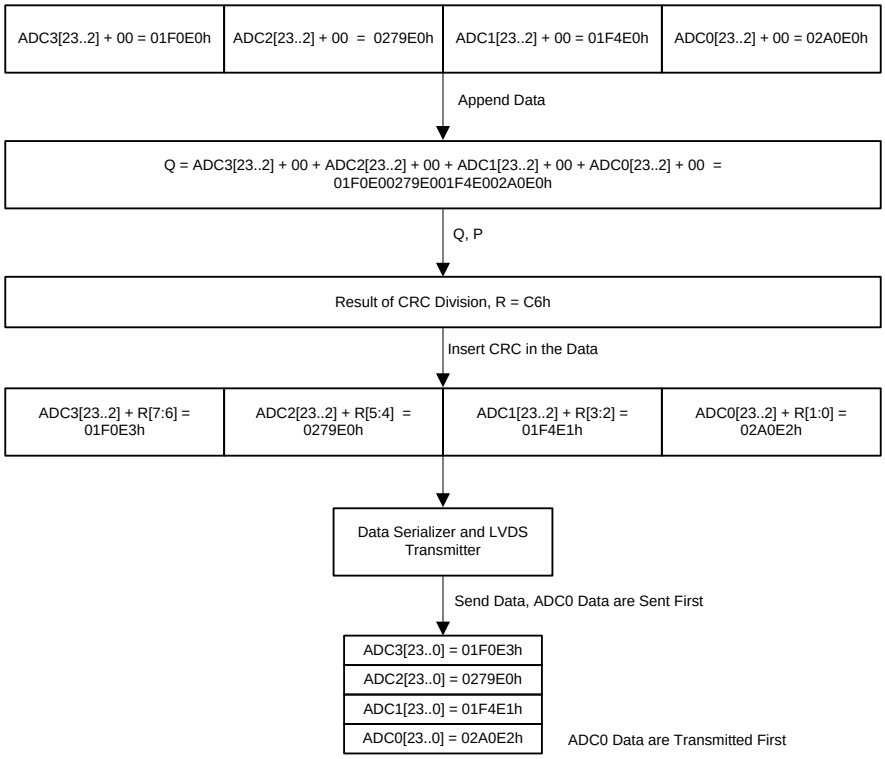

NOTE: + denotes the appending of bits.

Figure 69. CRC Computation Inside the AFE2256

Steps for a CRC at the receiver end:

1. The set of four 24-bit samples (total of 96 bits) is considered for CRC calculations.
2. Incoming R' = CRC_IN[7:0] = ADC3[1:0] + ADC2[1:0] + ADC1[1:0] + ADC0[1:0]. Where + denotes the appending of bits.
3. The dividend polynomial Q[95:0] = ADC3[23..2] + 00 + ADC2[23..2] + 00 + ADC1[23..2] + 00 + ADC0[23..2] + 00 is divided by P = 97h to generate the 8-bit result, such as R[7:0].
4. Compare R and R' to verify data integrity.
5. Alternately, the vector R' can be appended to the end of Q to generate Q' = Q + R', where + indicates the append operation. Then, the CRC division can be performed on Q' by P. The result of division is zero, thus implying that the data have no errors within the detectable limits of CRC.

Copyright © 2015, Texas Instruments Incorporated

An example of a cyclic redundancy check shown in Figure 70.

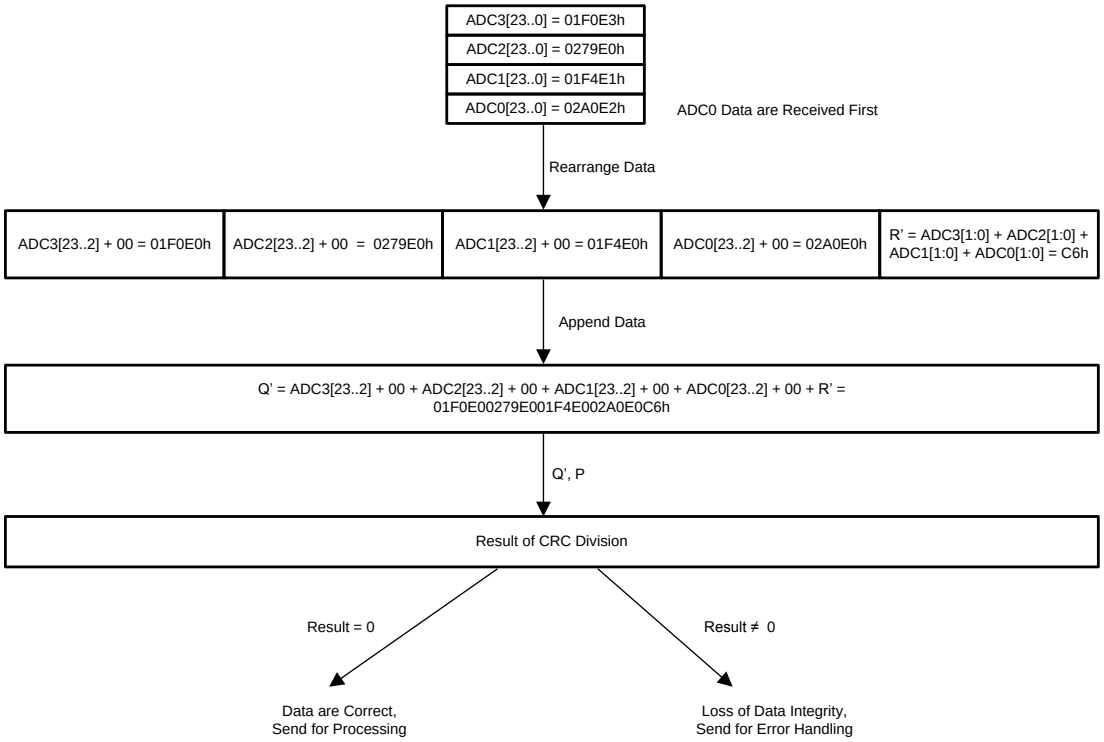

Figure 70. CRC Check

8.2 Typical Application

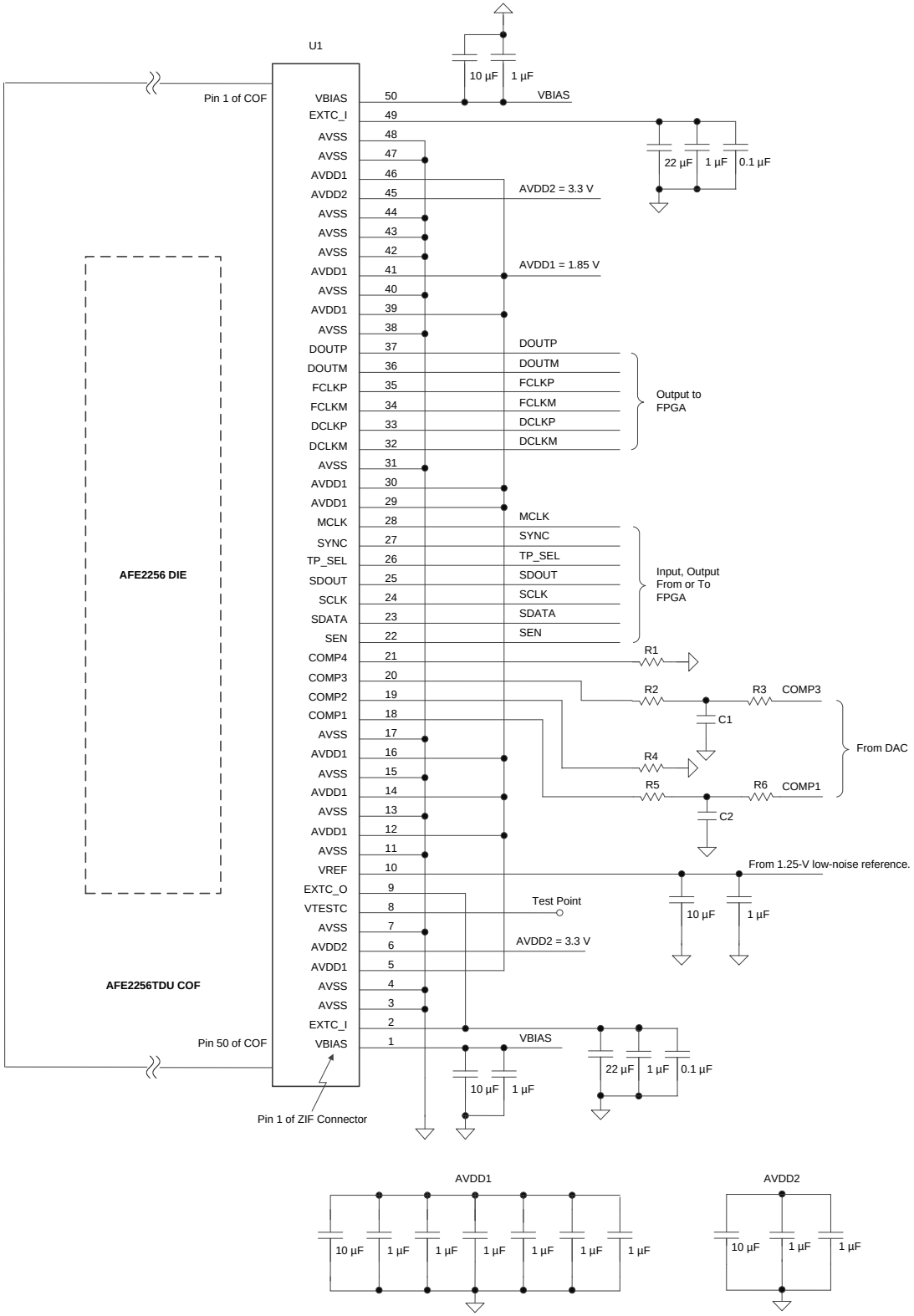

NOTE: All capacitors are of X5R or X7R type.

Figure 71. Typical Application Circuit

Copyright © 2015, Texas Instruments Incorporated

Typical Application (continued)

Table 45. Component Selection for Figure 71

REFERENCE DESIGNATOR	DESCRIPTION VALUE
U1	ZIF connector for the AFE2256 COF. Part number: FH28D - 50S - 0.5SH(05)
R1-R6 and C1, C2	R-C circuit on COMP[4:1] pins. Useful to control the charge injection time constant.

8.2.1 Design Requirements

To configure the AFE2256, the parameters specified in Table 46 must be known.

Table 46. Design Parameters

PARAMETER	EXAMPLE VALUE
Line time (t_{SCAN})	102.4 µs
Input charge range	4.8 pC
TFT on-time + TFT charge injection settling time (t_{intg})	75 µs

8.2.2 Detailed Design Procedure

To begin, the design procedure parameters described in the *Design Requirements* section must be known.

8.2.2.1 Input Charge Range Selection

The *Electrical Characteristics* table specifies various input charge ranges available in the device. Select a charge range equal to or higher than the maximum expected input charge. Input charge range can be configured from the INPUT_CHARGE_RANGE bits (register 5Ch, bits 15-11).

8.2.2.2 MCLK Selection

The line time can be calculated as Equation 2:

$$t_{MCLK} = \frac{t_{SCAN}}{2^{(8+STR)}}$$

where

- $100\ ns \le t_{MCLK} \le 50\ ns$ (2)

From Equation 2, the required t_{SCAN} can be achieved by different combinations of MCLK frequency and STR settings. Select the highest possible STR and MCLK frequency to provide a higher ADC averaging factor, and thus a lower back-end noise, as indicated in Table 2.

8.2.2.3 Programming the TG

After selecting the MCLK frequency and STR, the next step is to determine the duration of each phase. To program a duration for each phase, the TG programming resolution must be known. The TG resolution or time-step can be calculated as shown in Equation 3.

$$t_{step} = 2^{STR} \times t_{MCLK} \quad (3)$$

From the *Timing Requirements* section, the time for each phase can be selected.

The next step is to calculate the time available for the low-pass filter. To calculate this time, first find the extra TG time-steps available after satisfying the requirements in Table 47. The extra TG time-steps available are given by Equation 4.

$$N_{extra} = 256 - (N_{IRST} + N_{SHR-LPF1} + N_{SHR-LPF2}) - 5$$

where

- The additional five cycles are subtracted because of constraints described in the *Constraints on TG Values* section (4)

Table 47. Calculating t_{IRST}, $t_{SHR-LPF1}$, and $t_{SHS-LPF2}$ (1)

PARAMETER		MINIMUM DURATION	DURATION IN TERMS OF t_{step}
t_{IRST}	IRST time	1.5 µs	$N_{IRST} = ceil\left(\frac{t_{IRST}}{t_{step}}\right)$
$t_{SHR-LPF1}$	SHR time before the LPF1 rising edge	4 µs	$N_{SHR-LPF1} = ceil\left(\frac{t_{SHR-LPF1}}{t_{step}}\right)$
$t_{SHS-LPF2}$	SHS time before the LPF2 rising edge	Max (t_{intg}, $t_{SHS-min}$), $t_{SHS-min}$ = 4 µs	$N_{SHS-LPF2} = ceil\left(\frac{t_{SHS-LPF2}}{t_{step}}\right)$

(1) Ceil(x) gives the smallest integer greater than X.

N_{LPF1} and N_{LPF2} are the LPF1 and LPF2 duration in number of t_{step}s, respectively, as shown in Equation 5 and Equation 6.

$$N_{LPF1} = floor\left(\frac{N_{extra}}{2}\right) \quad (5)$$

$$N_{LPF2} = N_{extra} - N_{LPF1} \quad (6)$$

The SHR and SHS phase timings in terms of t_{step} are shown by Equation 7 and Equation 8.

$$N_{SHR} = N_{SHR-LPF1} + N_{LPF1} \quad (7)$$

$$N_{SHS} = N_{SHS-LPF2} + N_{LPF2} \quad (8)$$

The rising and falling edges for each signal are shown in Table 48. The final rising and falling values for the SHR and SHS phases may require adjustment for STR = 0 and STR = 1 because of additional restrictions described in the *Constraints on TG Values* section.

Table 48. Calculating Rising and Falling Edge Values for Various Timing Phases

TIMING SIGNAL	RISING EDGE	FALLING EDGE
IRST	1	IRST_FALL = N_{IRST} + 1
SHR	SHR_RISE = IRST_FALL + 1	SHR_FALL = SHR_RISE + N_{SHR}
SHS	SHS_RISE = SHR_FALL + 1	254
LPF1	SHR_FALL – N_{LPF1}	SHR_FALL + 1
LPF2	254 – N_{LPF2}	255

8.2.2.4 Filter Selection

From Equation 5, the available filtering time can be calculated as Equation 9 and Equation 10:

$$t_{LPF1\text{-}available} \text{ (in seconds)} = t_{step} \times N_{LPF1} \quad (9)$$

$$t_{LPF2\text{-}available} \text{ (in seconds)} = t_{step} \times N_{LPF2} \quad (10)$$

The *Electrical Characteristics* table provides the minimum settling time required for different low-pass filters. Select the filter with the lowest cutoff frequency that satisfies Equation 11 and Equation 12 to get optimum noise performance. For example, if $t_{LPF1\text{-}available}$ = 20 µs, then the lowest filter that can be selected is f_{LPF1} = 26 kHz ($t_{LPF1-min}$ = 18.2 µs).

$$t_{LPF1-min} \le t_{LPF1\text{-}available} \quad (11)$$

$$t_{LPF2-min} \le t_{LPF2\text{-}available} \quad (12)$$

8.2.2.5 Timing Profile Selection

The AFE2256 provides a dual timing profile structure. This feature is useful in case an application must change timings during image capture. For more details, see the *Timing Profiles* section.

For the dual timing profile, the programming TG operation (see the *Programming the TG* section) must be repeated for each timing profile.

Copyright © 2015, Texas Instruments Incorporated

Consider the following precautions when using the dual timing profile capture:

- The TP_SEL signal can change states at any time during the capture. Applying SYNC dictates the instance when the timing profile changes. Thus, timing requirements for the TP_SEL signal are relaxed.
- SYNC can be a periodic signal or a one-shot pulse. If SYNC is periodic, the duration must be an integral multiple of 2 × t_{SCAN} (that is, the SYNC pulse can only be applied on an even-line, bank A). The same restriction apply for a one-shot SYNC pulse as well. If SYNC is applied at any other point, glitches can result in the PLL-generated clock. These glitches can lead to a bit alignment change.

  For a single timing profile, any one timing profile can be programmed.

  As discussed in the *Timing Profiles* section, the device permits programming of the timing profile that is not being used for data capture. For example, if TPα is used for TG (TP_SEL = 0), then TPβ can be programmed. Thus, change the TP_SEL state and apply SYNC to activate a programmed timing profile.

8.2.3 Application Curve

Figure 72 shows the input-referred noise as a function of C_{sensor} as per the settings specified in the *System Examples* section.

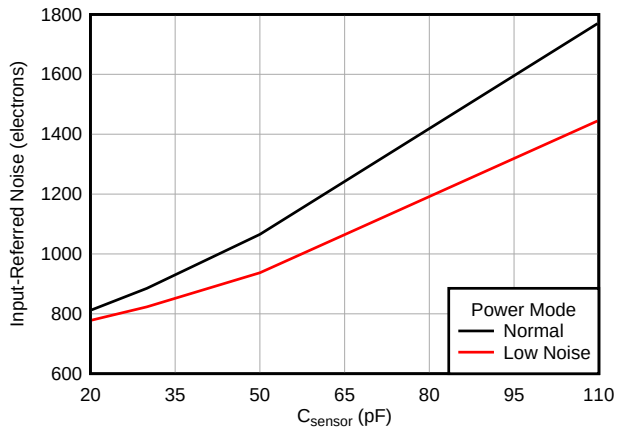

Figure 72. Input-Referred Noise vs C_{sensor}

8.3 System Examples

Consider a case with the requirements listed in Table 49.

Table 49. Application Example Design Parameters

PARAMETER	EXAMPLE VALUE
Line time (t_{SCAN})	102.4 µs
Input charge range	4.8 pC
TFT on-time + TFT charge injection settling time (t_{intg})	75 µs

The system requires a single timing profile (timings are not changed during frame capture).

8.3.1 Input Charge Range Selection

Configure INPUT_CHARGE_RANGE (register 5Ch, bits 15-11) = 010000.

8.3.2 MCLK Selection

The required line time can be achieved with the following combinations of MCLK and STR:

- Option 1: MCLK = 20 MHz and STR = 3 (2048 MCLKs)
- Option 2: MCLK = 10 MHz and STR = 2 (1024 MCLKs)

As discussed in the *MCLK Selection* section, option 1 is preferred.

8.3.3 Programming TG

Using the design parameters from Table 49 and following the procedure described in the *Programming the TG* section, the values listed below are obtained:

- t_{step} = 400 ns
- N_{IRST} = 4
- $N_{SHR\text{-}LPF1}$ = 10
- $N_{SHR\text{-}LPF2}$ = 188
- N_{LPF1} = 24
- N_{LPF2} = 25

8.3.4 Filter Selection

From Equation 9 and Equation 10, the available filtering time is as shown in Equation 13 and Equation 14:

$$t_{LPF1\text{-}available} = 9.6\ \mu s \quad (13)$$

$$t_{LPF2\text{-}available} = 10\ \mu s \quad (14)$$

From the *Timing Requirements* section, f_{LPF1} = 52 kHz and f_{LPF2} = 52 kHz satisfy Equation 11 and Equation 12. Thus, a 52-kHz filter is selected for filtering in the SHR and SHS phase.

To enable the 52-kHz filter, configure LPF1_FREQ (register 5Ch, bits 9-6) = LPF2_FREQ (register 5Ch, bits 4-1) = 00011.

From these calculations, the final timings are as specified in Table 50.

Table 50. Application Example Timings

SIGNAL	RISING EDGE LOCATION (Decimal)	FALLING EDGE LOCATION (Decimal)	DURATION (µs)	RISING EDGE (Hex)	FALLING EDGE (Hex)	REGISTER ADDRESS (Hex)	REGISTER VALUE (Hex)
IRST	1	5	1.6	01	05	40	0105
SHR	6	40	13.6	06	28	42	0628
SHS	41	254	85.2	29	FE	43	29FE
LPF1	16	41	9.6	10	29	46	1029
LPF2	229	255	10.0	E5	FF	47	E5FF

8.3.5 Timing Profile Selection

Because a single timing profile is sufficient, profile TPα is selected. In this case, the registers are configured as follows:

- TP_SEL = 1, apply a SYNC pulse
- Program the TG values derived from Table 50
- TP_SEL = 0, apply a SYNC pulse

Copyright © 2015, Texas Instruments Incorporated

9 Power Supply Recommendations

The power-supply design can affect noise and crosstalk performance of the system. Consider the following recommendations when designing the power supply for an AFE2256-based system.

- Parameters such as thermal noise, low-frequency noise, PSRR, and load regulation must be considered when selecting the low-dropout regulator (LDO). Using a low-noise LDO (such as the TPS7A8300) is recommended for AVDD1 and AVDD2.
- In order to improve the system power efficiency, a dc-dc converter can be used to drive the LDO. In this case, the dc-dc converter clock frequency must be an integral multiple of the line rate, otherwise increased noise can result in the image. When selecting the LDO, consider the LDO PSRR at the dc-dc converter switching frequency.
- Using LDOs with an output enable and power-good feature is preferable. These features can be useful for power-supply sequencing.

10 Layout

10.1 Layout Guidelines

This section discusses the general guidelines when designing the system board.

- The AFE2256 has two EXTC_I pins. These pins are shorted inside the device and, therefore, board layout can be simplified by connecting only one EXTC_I (nearer to EXTC_O) to the EXTC_O pin. EXTC_I must be directly connected to the EXTC_O pin, which is the output of the internal low-noise buffer.
- Each EXTC_I pin must be bypassed to ground by low-ESR ceramic capacitors. Parallel combinations of 22-µF, 1-µF, and 0.1-µF capacitors near each EXTC_I pin is recommended. Use X5 or X7 capacitors.
- Switching signal traces or vias must not be present near the reference routing. Even COMP signals must be avoided near VREF because COMP signals contain switching currents.
- Voltage references and digital-to-analog converters (DACs) must be placed away from digital circuits. Placing these references and DACs in the region of board with no switching activity is recommended.
- Provide good ground connectivity by using ground planes on multiple layers. Connect all ground planes using multiple stitching vias; especially where vias on signal traces are placed.
- Each ground pin must directly connect to the AGND (analog ground) plane. Do not share ground vias of different ground pins.
- Provide a 1-µF bypass capacitor to ground for each supply pin.
- LVDS signals must be routed differentially with a differential impedance of 100 Ω.
- Wherever digital signal traces change the plane, provide a ground via near the signal via to provide the shortest path for return currents.
- Connect VTESTC to a test point, which is useful during debug and future purposes.

Copyright © 2015, Texas Instruments Incorporated

10.2 Layout Examples

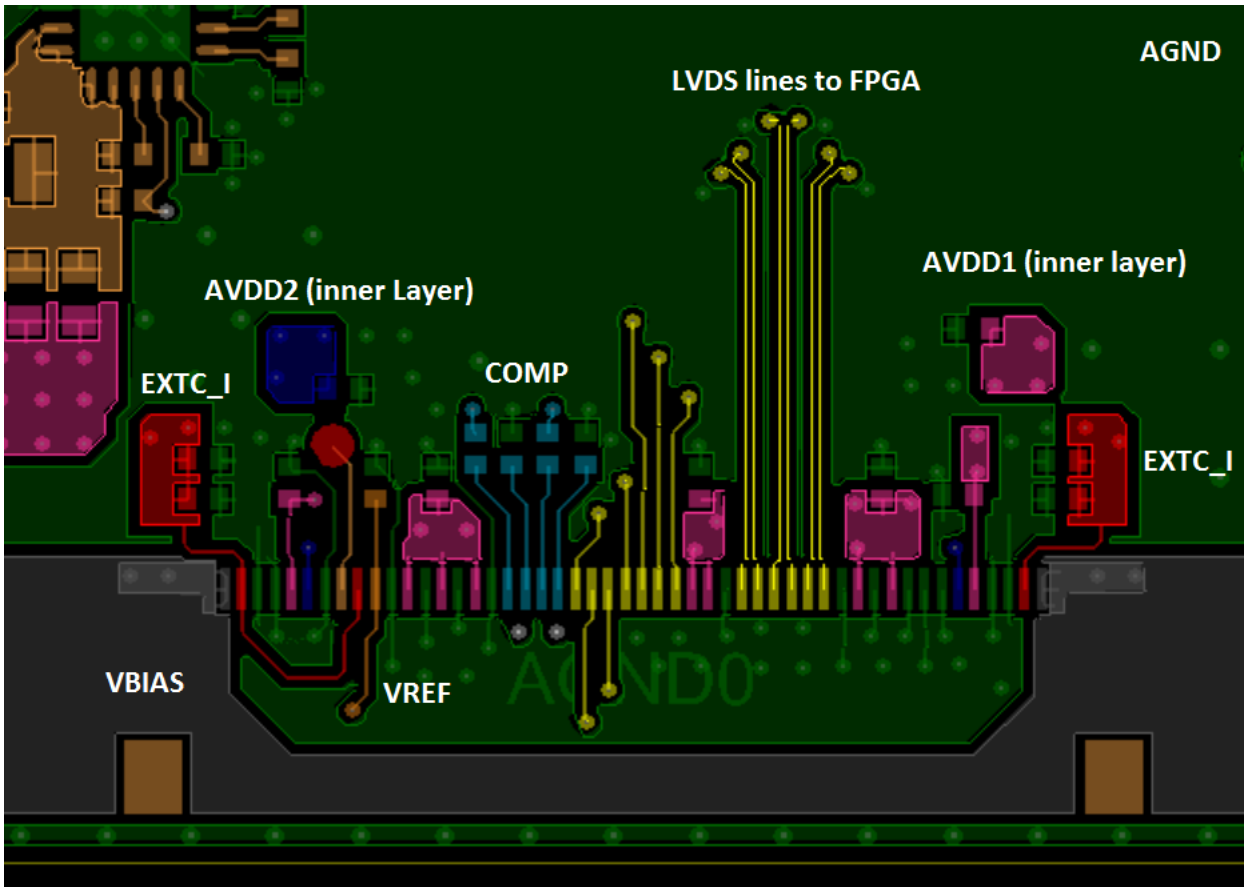

Figure 73. Top Layer

Copyright © 2015, Texas Instruments Incorporated

Layout Examples (continued)

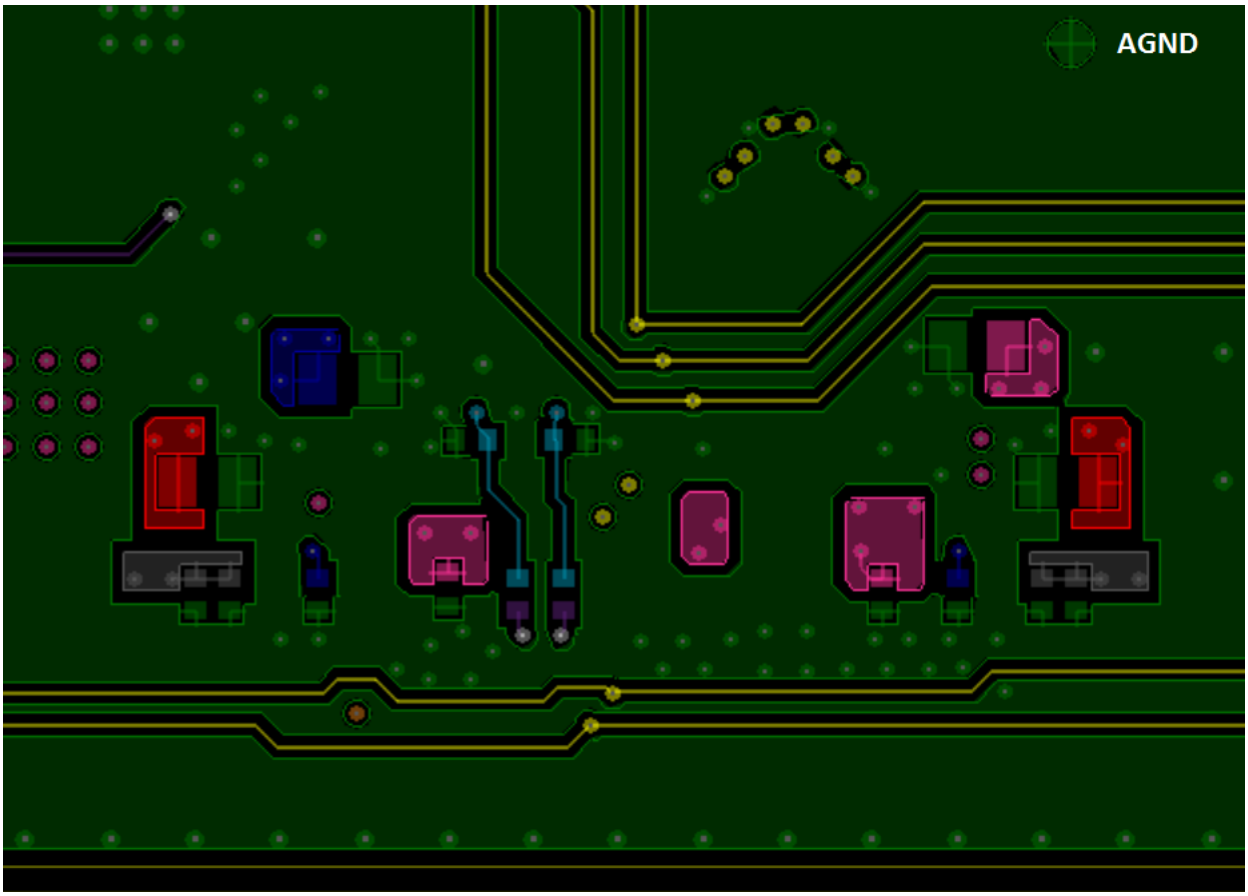

Figure 74. Bottom Layer

11 Device and Documentation Support

11.1 Documentation Support

11.1.1 Related Documentation

TPS7A8300 Data Sheet, SBVS197

11.2 Trademarks

SPI is a trademark of Motorola Mobility LLC.
All other trademarks are the property of their respective owners.

11.3 Electrostatic Discharge Caution

This integrated circuit can be damaged by ESD. Texas Instruments recommends that all integrated circuits be handled with appropriate precautions. Failure to observe proper handling and installation procedures can cause damage.

ESD damage can range from subtle performance degradation to complete device failure. Precision integrated circuits may be more susceptible to damage because very small parametric changes could cause the device not to meet its published specifications.

11.4 Glossary

SLYZ022 — *TI Glossary*.

This glossary lists and explains terms, acronyms, and definitions.

12 Mechanical, Packaging, and Orderable Information

The following pages include mechanical, packaging, and orderable information. This information is the most current data available for the designated devices. This data is subject to change without notice and revision of this document. For browser-based versions of this data sheet, refer to the left-hand navigation.

12.1 Package Drawing

The package drawing is shown in Figure 75.

Copyright © 2015, Texas Instruments Incorporated

Package Drawing (continued)

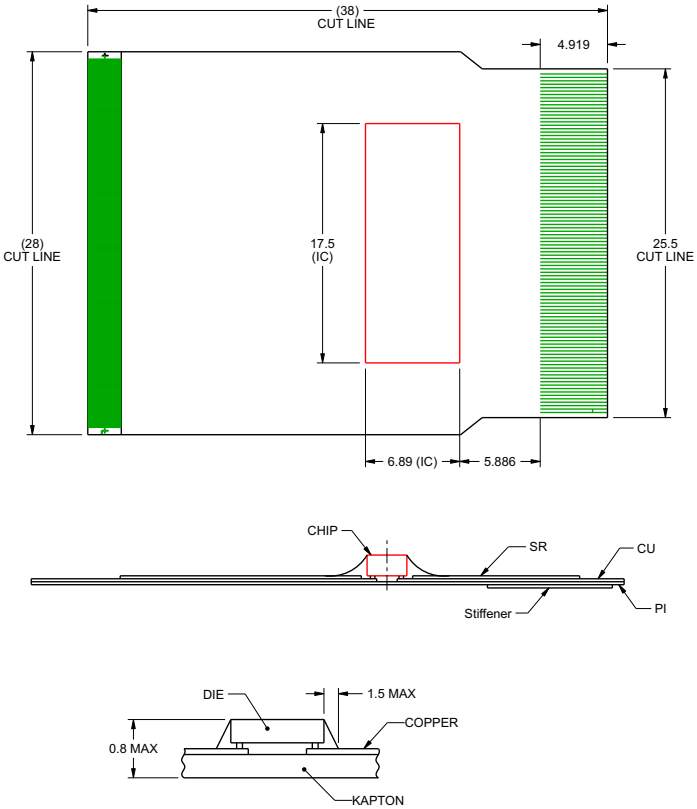

Material Description

1.Space Tape Material	Polyester(PET)		
Leader Tape Material	Polyimide(PI)		
PKG Reel Size	405mm		Niching
Polyimide	KAPTON-EN	38	Toray Dupont
Copper	ED Copper	8	TAF
Plating	Au/Ni		Subtron
Solder Resist	SN-9000F		
2. Thickness			
Polyimide	KAPTON-EN	38± 3 um	Toray Dupont
Copper	ED Copper	8± 2um	TAF
Plating	Au	Min 0.3um	Subtron
	Ni	Min 0.4um	Subtron
Solder Resist	SN-9000F	15± 10 um	

3. Solder Resist Tolerance: ± 0.200mm
4. ALL OTHER CHAMFER IS R0.200mm.
5. 10 SPROCKET HOLES 48 (SW) , FOR 1 TAPE SITE
6. Min Pitch: 62um/ width 18um/ space 44um
7. GENERAL TOLERANCE: ±0.05mm

9. Output IL total pitch from top 2nd to bottom 2nd
10. ILB Direction: Face Down.
11. This figure shows the Copper side of tape.

Figure 75. Package Drawing

12.2 Tray Dimensions

Tray dimensions for the TDU package is shown in Figure 76.

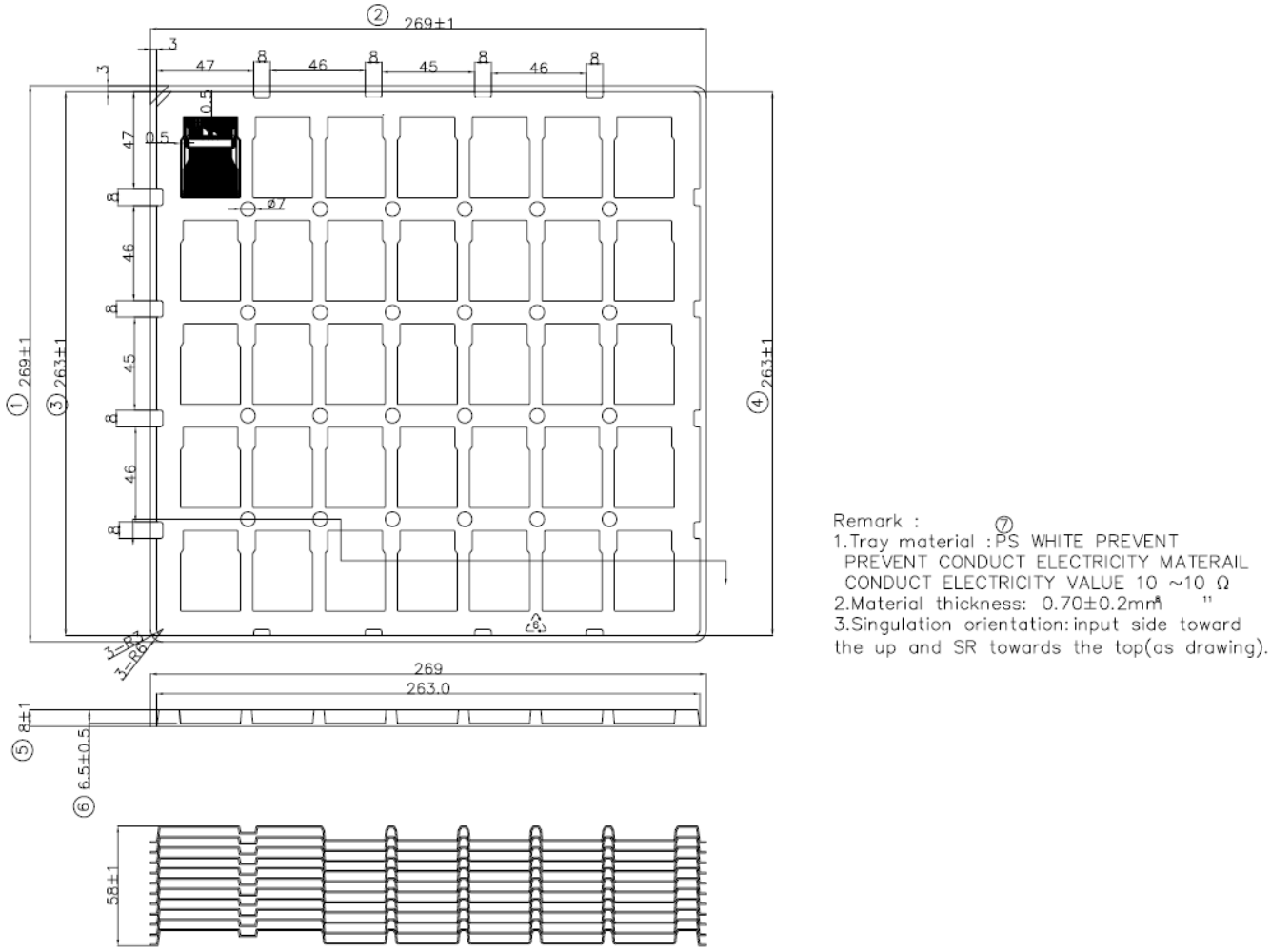

Figure 76. TDU Tray Dimensions

Copyright © 2015, Texas Instruments Incorporated

12.3 Package Option Addendum

12.3.1 Packaging Information

Orderable Device	Status (1)	Package Type	Package Drawing	Pins	Package Qty	Eco Plan (2)	Lead/Ball Finish	MSL Peak Temp (3)	Op Temp (°C)	Device Marking(4)(5)
AFE2256TDU	ACTIVE	COF	TDU	320	35	Green (RoHS & no Sb/Br)	Au	Level-1-260C-UNLIM	0 to 85	AFE2256TDU

(1) The marketing status values are defined as follows:
ACTIVE: Product device recommended for new designs.
LIFEBUY: TI has announced that the device will be discontinued, and a lifetime-buy period is in effect.
NRND: Not recommended for new designs. Device is in production to support existing customers, but TI does not recommend using this part in a new design.
PRE_PROD Unannounced device, not in production, not available for mass market, nor on the web, samples not available.
PREVIEW: Device has been announced but is not in production. Samples may or may not be available.
OBSOLETE: TI has discontinued the production of the device.

(2) Eco Plan - The planned eco-friendly classification: Pb-Free (RoHS), Pb-Free (RoHS Exempt), or Green (RoHS & no Sb/Br) - please check http://www.ti.com/productcontent for the latest availability information and additional product content details.
TBD: The Pb-Free/Green conversion plan has not been defined.
Pb-Free (RoHS): TI's terms "Lead-Free" or "Pb-Free" mean semiconductor products that are compatible with the current RoHS requirements for all 6 substances, including the requirement that lead not exceed 0.1% by weight in homogeneous materials. Where designed to be soldered at high temperatures, TI Pb-Free products are suitable for use in specified lead-free processes.
Pb-Free (RoHS Exempt): This component has a RoHS exemption for either 1) lead-based flip-chip solder bumps used between the die and package, or 2) lead-based die adhesive used between the die and leadframe. The component is otherwise considered Pb-Free (RoHS compatible) as defined above.
Green (RoHS & no Sb/Br): TI defines "Green" to mean Pb-Free (RoHS compatible), and free of Bromine (Br) and Antimony (Sb) based flame retardants (Br or Sb do not exceed 0.1% by weight in homogeneous material)

(3) MSL, Peak Temp. -- The Moisture Sensitivity Level rating according to the JEDEC industry standard classifications, and peak solder temperature.

(4) There may be additional marking, which relates to the logo, the lot trace code information, or the environmental category on the device

(5) Multiple Device markings will be inside parentheses. Only on Device Marking contained in parentheses and separated by a "~" will appear on a device. If a line is indented then it is a continuation of the previous line and the two combined represent the entire Device Marking for that device.

Important Information and Disclaimer: The information provided on this page represents TI's knowledge and belief as of the date that it is provided. TI bases its knowledge and belief on information provided by third parties, and makes no representation or warranty as to the accuracy of such information. Efforts are underway to better integrate information from third parties. TI has taken and continues to take reasonable steps to provide representative and accurate information but may not have conducted destructive testing or chemical analysis on incoming materials and chemicals. TI and TI suppliers consider certain information to be proprietary, and thus CAS numbers and other limited information may not be available for release.

In no event shall TI's liability arising out of such information exceed the total purchase price of the TI part(s) at issue in this document sold by TI to Customer on an annual basis.

IMPORTANT NOTICE

Texas Instruments Incorporated and its subsidiaries (TI) reserve the right to make corrections, enhancements, improvements and other changes to its semiconductor products and services per JESD46, latest issue, and to discontinue any product or service per JESD48, latest issue. Buyers should obtain the latest relevant information before placing orders and should verify that such information is current and complete. All semiconductor products (also referred to herein as “components”) are sold subject to TI’s terms and conditions of sale supplied at the time of order acknowledgment.

TI warrants performance of its components to the specifications applicable at the time of sale, in accordance with the warranty in TI’s terms and conditions of sale of semiconductor products. Testing and other quality control techniques are used to the extent TI deems necessary to support this warranty. Except where mandated by applicable law, testing of all parameters of each component is not necessarily performed.

TI assumes no liability for applications assistance or the design of Buyers’ products. Buyers are responsible for their products and applications using TI components. To minimize the risks associated with Buyers’ products and applications, Buyers should provide adequate design and operating safeguards.

TI does not warrant or represent that any license, either express or implied, is granted under any patent right, copyright, mask work right, or other intellectual property right relating to any combination, machine, or process in which TI components or services are used. Information published by TI regarding third-party products or services does not constitute a license to use such products or services or a warranty or endorsement thereof. Use of such information may require a license from a third party under the patents or other intellectual property of the third party, or a license from TI under the patents or other intellectual property of TI.

Reproduction of significant portions of TI information in TI data books or data sheets is permissible only if reproduction is without alteration and is accompanied by all associated warranties, conditions, limitations, and notices. TI is not responsible or liable for such altered documentation. Information of third parties may be subject to additional restrictions.

Resale of TI components or services with statements different from or beyond the parameters stated by TI for that component or service voids all express and any implied warranties for the associated TI component or service and is an unfair and deceptive business practice. TI is not responsible or liable for any such statements.

Buyer acknowledges and agrees that it is solely responsible for compliance with all legal, regulatory and safety-related requirements concerning its products, and any use of TI components in its applications, notwithstanding any applications-related information or support that may be provided by TI. Buyer represents and agrees that it has all the necessary expertise to create and implement safeguards which anticipate dangerous consequences of failures, monitor failures and their consequences, lessen the likelihood of failures that might cause harm and take appropriate remedial actions. Buyer will fully indemnify TI and its representatives against any damages arising out of the use of any TI components in safety-critical applications.

In some cases, TI components may be promoted specifically to facilitate safety-related applications. With such components, TI’s goal is to help enable customers to design and create their own end-product solutions that meet applicable functional safety standards and requirements. Nonetheless, such components are subject to these terms.

No TI components are authorized for use in FDA Class III (or similar life-critical medical equipment) unless authorized officers of the parties have executed a special agreement specifically governing such use.

Only those TI components which TI has specifically designated as military grade or “enhanced plastic” are designed and intended for use in military/aerospace applications or environments. Buyer acknowledges and agrees that any military or aerospace use of TI components which have ***not*** been so designated is solely at the Buyer's risk, and that Buyer is solely responsible for compliance with all legal and regulatory requirements in connection with such use.

TI has specifically designated certain components as meeting ISO/TS16949 requirements, mainly for automotive use. In any case of use of non-designated products, TI will not be responsible for any failure to meet ISO/TS16949.

Products		**Applications**	
Audio	www.ti.com/audio	Automotive and Transportation	www.ti.com/automotive
Amplifiers	amplifier.ti.com	Communications and Telecom	www.ti.com/communications
Data Converters	dataconverter.ti.com	Computers and Peripherals	www.ti.com/computers
DLP® Products	www.dlp.com	Consumer Electronics	www.ti.com/consumer-apps
DSP	dsp.ti.com	Energy and Lighting	www.ti.com/energy
Clocks and Timers	www.ti.com/clocks	Industrial	www.ti.com/industrial
Interface	interface.ti.com	Medical	www.ti.com/medical
Logic	logic.ti.com	Security	www.ti.com/security
Power Mgmt	power.ti.com	Space, Avionics and Defense	www.ti.com/space-avionics-defense
Microcontrollers	microcontroller.ti.com	Video and Imaging	www.ti.com/video
RFID	www.ti-rfid.com		
OMAP Applications Processors	www.ti.com/omap	**TI E2E Community**	e2e.ti.com
Wireless Connectivity	www.ti.com/wirelessconnectivity		

Mailing Address: Texas Instruments, Post Office Box 655303, Dallas, Texas 75265
Copyright © 2015, Texas Instruments Incorporated