Camunda Developer Classes

Clone and checkout

To get your first copy, please enter

```
git clone https://github.com/holisticon/camunda-dev-classes.git
```

Every task covered in the workshop is supported by a lab class. **The branch X contains the solution for the class X**. To start, checkout `master` and start with `class 1` After you are done, checkout the branch `class/1-process-model` and inspect the solution.

The following branches exist:

```
master
class/1-process-model
class/2-java-delegate
class/3-test-it
class/4-test-it-to-the-end
class/5-delegate-testing
class/6-automatic-approval
class/7-human-workflow
class/8-data-spin
class/9-dmn
class/10-external-task
class/10-listeners
class/11-bpmn-error
class/12-timer
class/13-messages
class/14-external-task
class/15-camunda-bpm-data
class/16-variable-guard
class/17-acl
class/18-jgiven
```

Please change the branches using:

```
git stash

# or to keep yours
git add --all
git commit -m "my solution"

# then
git checkout class/<class-name>
```

Building

To build the project, please enter

```
./mvnw clean install
```

Running examples

To run the project, please enter

```
./mvnw spring-boot:run
```

URLs

- Camunda Cockpit: http://localhost:8080/camunda/app/cockpit/default/
- Camunda Tasklist: http://localhost:8080/camunda/app/tasklist/default/
- Swagger-UI: http://localhost:8080/swagger-ui/index.html

Lab classes

Class 1: Model, start, fail

In this class you will create a trivial process model in BPMN that is executed by the Camunda engine. If this process is started, the id of approval request is provided as a process variable `approvalId`. The process should load the approval for the provided id using a service task. Here is the resulting process model:

To complete this class, execute the following steps:

- Create a process model (File > New File > BPMN Diagram (Camunda 7))
  - Put it into (`src/main/resources/approval.bpmn`)
- Process **ID**: `approval`
- Start event: **Asynchronous Continuation > After**
- Service task:
  - ID: `service_load_approval_request`
  - Name: `Load approval request`
  - Implementation > Type `Delegate expression`
  - Implementation > Delegate expression: `${loadApprovalRequestDelegate}`
- Start the process using Swagger-UI

- Inspect in Cockpit (login: admin/admin)

> All ids in the process model are using **Snake Case** All references to code are using **Camel case**

> NOTES:
>
> - Check console for exception
> - Why does it happen?
> - Why async after?

Class 2: Java Delegate

In the previous class, you referenced a bean from a service task. In this task, you will provide the implementation of this bean implementing a Java Delegate.

To complete this class, execute the following steps:

- Create a Spring Component
- Call it `LoadApprovalRequestDelegate`
- Implement `JavaDelegate` interface
- Start the process using Swagger-UI

```
package de.holisticon.academy.camunda.orchestration.process;

import org.camunda.bpm.engine.delegate.DelegateExecution;
import org.camunda.bpm.engine.delegate.JavaDelegate;
import org.slf4j.Logger;
import org.slf4j.LoggerFactory;
import org.springframework.stereotype.Component;

@Component("loadApprovalRequestDelegate")
public class LoadApprovalRequestDelegate implements JavaDelegate {

  private static final Logger logger =
LoggerFactory.getLogger(LoadApprovalRequestDelegate.class);

  public void execute(DelegateExecution execution) {
    logger.info("Executed by process instance {}",
execution.getProcessInstanceId());
  }
}
```

> NOTES:
>
> - See console log

Class 3: Test it!

- Extend the process runner skeleton
- Implement:

- deployment test
- process start test (async)

```
  @Test
  public void shouldDeploy() {
    // no asserts, deployment would throw exception and fail the test on
errors
  }

  @Test
  public void shouldStartWaitInApprovalRequested() {
    ProcessInstance instance = this.processBean.start();

    assertThat(instance).isNotNull();
    assertThat(instance).isWaitingAt(Elements.APPROVAL_REQUESTED);
  }
```

> NOTES:
>
> - Look at the empty test method

Class 4: Test it to the end

```
  @BeforeEach
  public void before() {
    // ...

    Mocks.register(Expressions.LOAD_APPROVAL_REQUEST,
      new LoadApprovalRequestDelegate());
  }

  // Extend the test
  @Test
  public void shouldStartAndLoadAndComplete() {
    ProcessInstance instance = this.processBean.start();

    assertThat(instance).isNotNull();
    assertThat(instance).isWaitingAt(Elements.APPROVAL_REQUESTED);

    execute(job());

    assertThat(instance).isEnded();
    assertThat(instance).hasPassedInOrder(
      Elements.APPROVAL_REQUESTED, Elements.LOAD_APPROVAL_REQUEST,
Elements.COMPLETED);

  }
```

> NOTES:
>
> - Try without mock first and see what happens!

Class 5: Delegate testing

- Delegate specification:
  - Use `ApprovalRequestRepository`
  - Load approval request by id (`Variables.APPROVAL_ID`)
  - Store amount (`Variables.AMOUNT`)
- Implement the delegate test
  - Use `Mockito.when().thenReturn()`
  - Use mocking framework: `camunda-platform-7-mockito`
  - Use `DelegateExecutionFake`
  - Use Mockito `verify()`

Class 6: Automatic approval

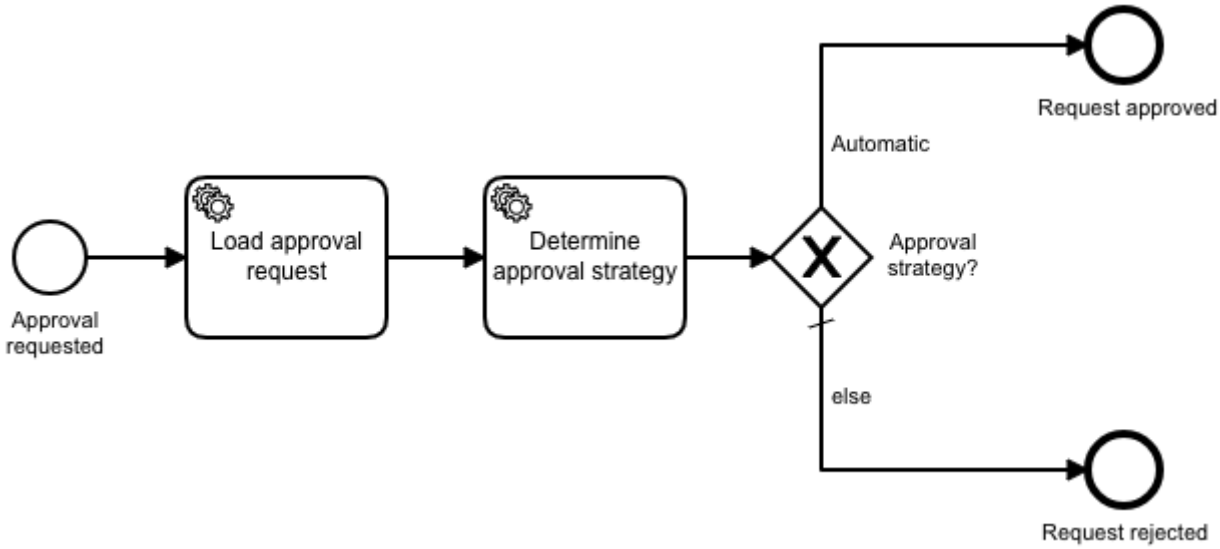

- Extend the process model
- Add Service task which
  - decides about approval strategy
  - automatic approval if amount < 100
- Add XOR gateway and branches
  - Use expression `${approvalStrategy == "Automatic"}`
- Test it!
- Mock delegate in process test
  - Use `CamundaMockito.registerJavaDelegateMock()`
  - Use `onExecutionSetVariables(...)`

> NOTES:
>
> - No delegate classes needed to run the process test!

Class 7: User tasks

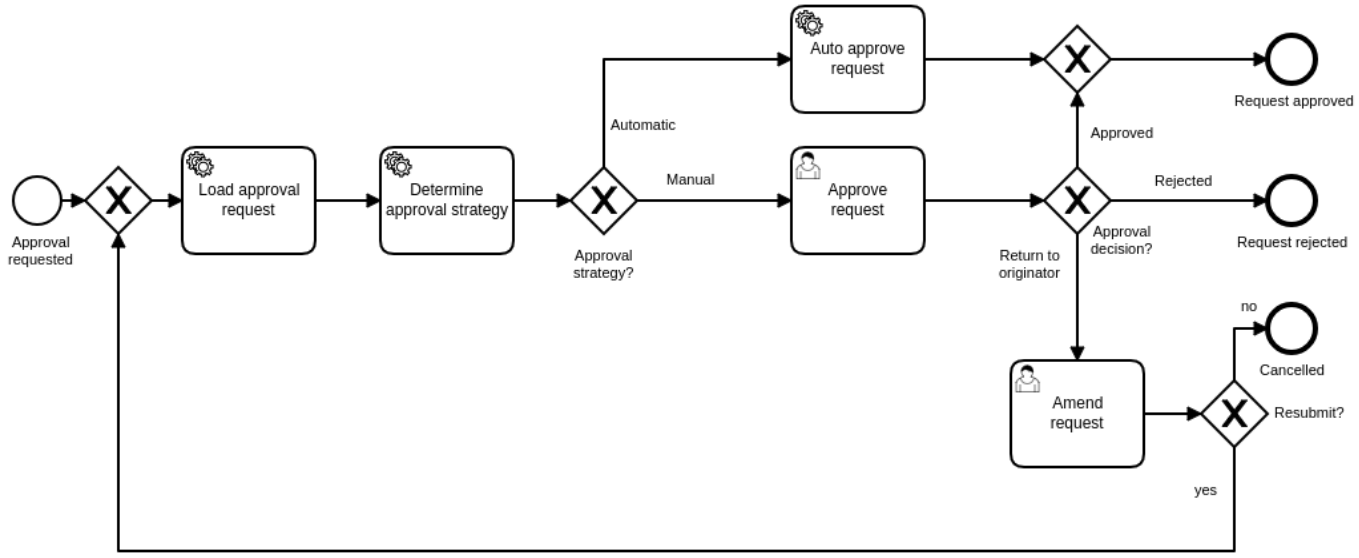

- Add user tasks
- Approve request
  - `General > ID`: `task_approve_request`
  - set variable `approvalDecision` to one of `APPROVED`, `REJECTED`, `RETURNED`
- Amend request
  - `General > ID`: `task_amend_request`
  - set variable `amendAction` to one of `CANCELLED`, `RESUBMIT`
- Test it!
- Try it
  - Use swagger endpoint
  - Check the tasklist

Class 8: Use SPIN

```
<dependency>
  <groupId>org.camunda.bpm</groupId>
  <artifactId>camunda-engine-plugin-spin</artifactId>
  <version>${camunda.version}</version>
</dependency>
<dependency>
  <groupId>org.camunda.spin</groupId>
  <artifactId>camunda-spin-dataformat-json-jackson</artifactId>
  <version>${version.camunda.spin}</version>
</dependency>
```

- Modify the process and store `ApprovalRequest` as variable
- Amend the tests
  - Register plugin for SPIN

Class 9: Business Rules with DMN

- Use business rule task for `Determine approval strategy`
- `File > New File> DMN (Camunda 7 diagram)`
- Decision:
  - `General > ID`: `determineApprovalStrategy`
- Implement the DMN table
- Access `request.amount`
- Policy: First
- Process:
  - `Implementation > Type`: `DMN`
  - `Implementation > Decision Reference` : `determineApprovalStrategy`
  - `Implementation > Result Variable`: `approvalStrategy`
  - `Implementaiton > Map decision result`: `singleEntry (TypedValue)`
- Adjust the test
- Deploy DMN (set TTL)
- Inspect the engine config
- Remove delegate mock
- Adjust mock for `loadRequest`

Class 10: External Tasks

- Modify the approval process and change: "Load approval request"
- Use `External` as implementation
- Topic: `load-approval-request`
- Implement the External Task worker
  - Open Module `external-task-worker`
  - Implement `LoadApprovalRequestWorker`
  - Use `LoadApprovalRequestDelegate` as reference
- Fix `ApprovalTest`

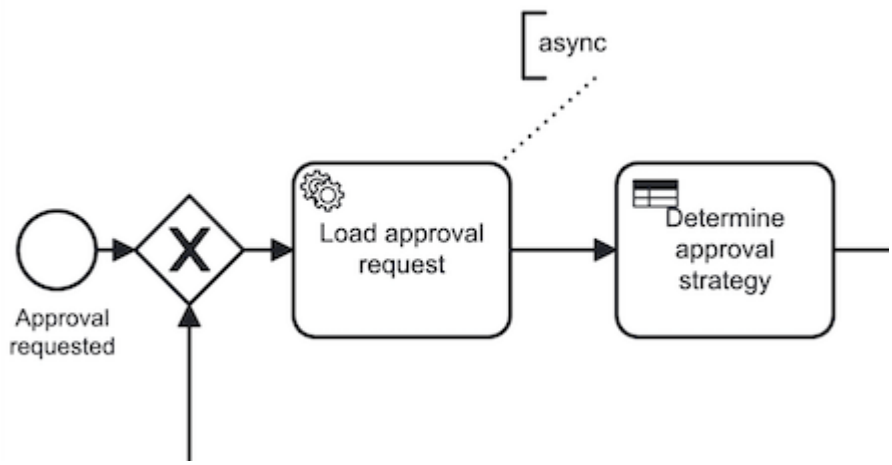

Class 10: Listeners

- Add audit trail listeners on en events
- Listener should log to the console
- Bind as `expression` with

Class 11: BPMN Error

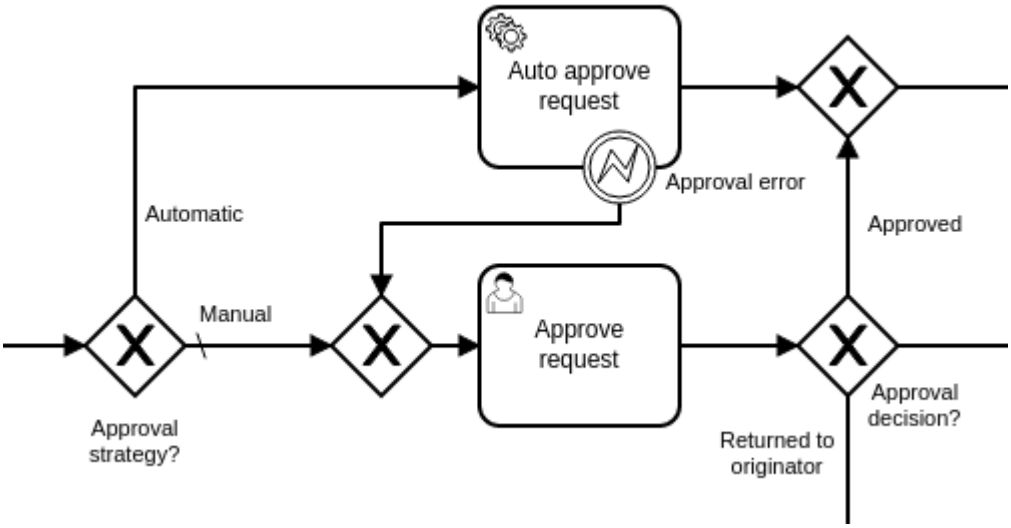

- Integrate BPMN Error with fallback to manual approval
- Adjust the test
- Add a new test case
- Change the `automatic approval delegate` stub
- Adjust `automatic approval delegate`
- Try with request `"4"`

Class 12: Timer events

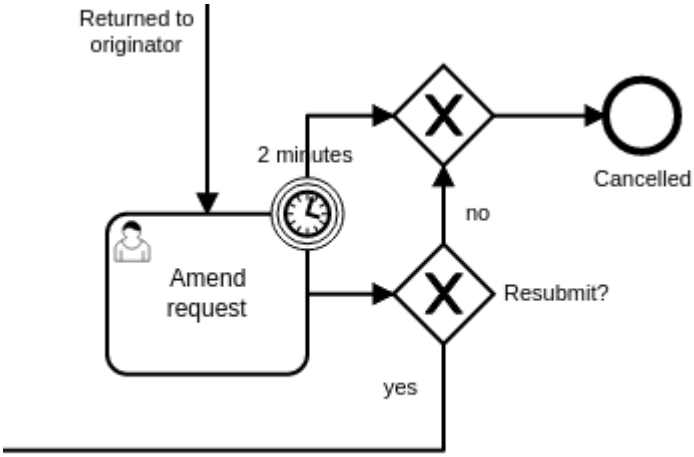

- `Amend request` task should timeout in two minutes
- Request is cancelled if timed-out
- Add a boundary timer event
- What about the test?
- `ClockUtil#offset(Long)`

Class 13: Messages

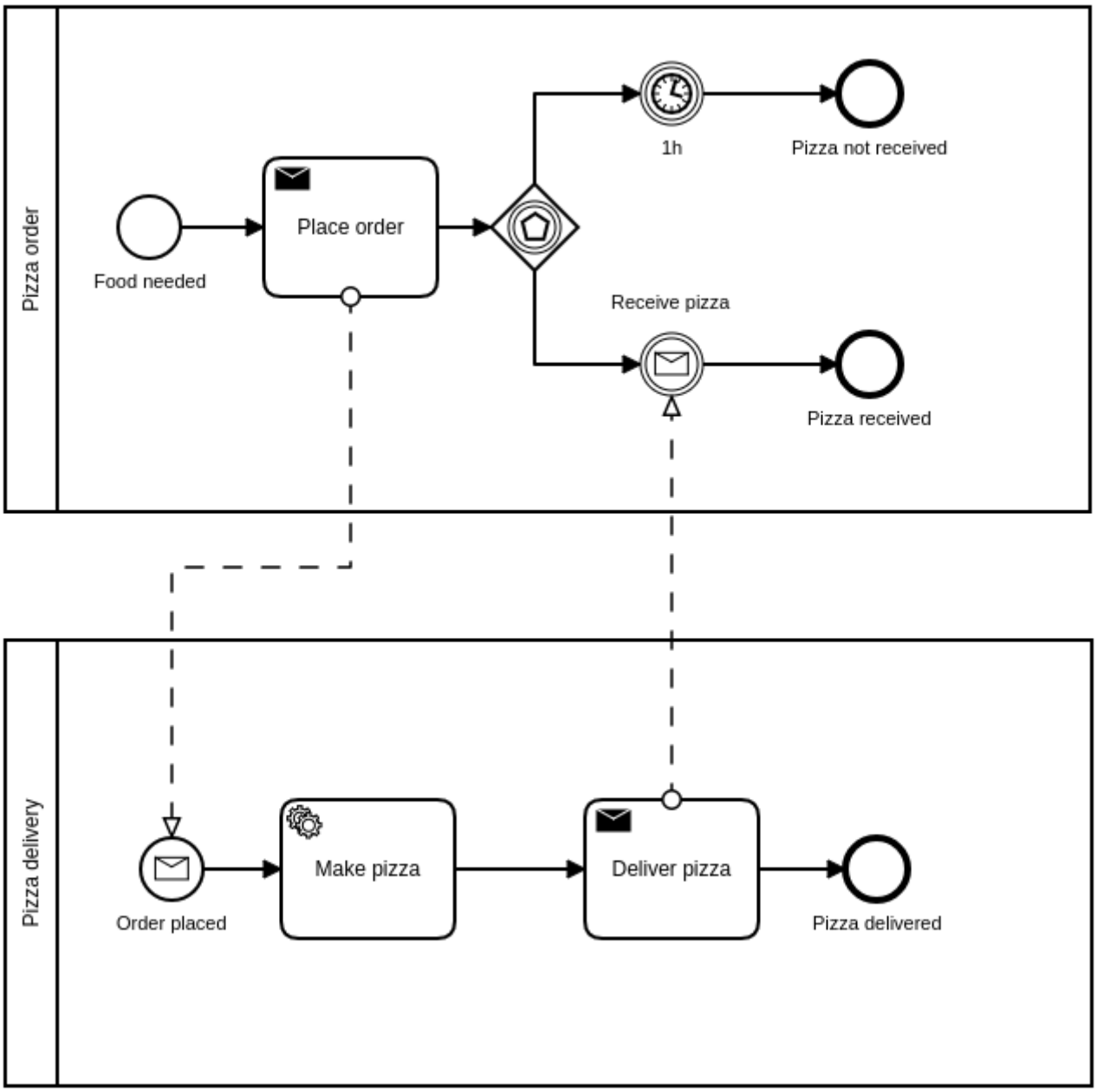

Safe correlation

```
public void correlate(String messageName, String businessKey) {
  Optional
    .ofNullable(
        this.runtimeService.createExecutionQuery()
            .processInstanceBusinessKey(businessKey)
            .messageEventSubscriptionName(messageName)
            .singleResult()
    ).ifPresent(e ->
        this.runtimeService.createMessageCorrelation(messageName)
            .processInstanceId(e.getProcessInstanceId())
            .correlate()
    );
}
```

- Start via swagger
- Checkout the Cockpit
- Implement the delegate `PlaceOrderDelegate`
- set `delivered` to `false`
- use correlate message
- pass the business key
- pass the pizza order: `type`, `size`, `delivered`
- Implement the delegate `DeliverPizzaDelegate`
- set `delivered` to `true`
- pass only the `delivered` back
- Check out the tests

Class 14: External Tasks

- Add a new step: "Pack pizza" after the pizza was made
- Use `External` as implementation
- Topic: `pizzaOrder:packPizza`
- Implement the External Task worker
  - Use `ExternalTaskService`
  - Log the ordered `type`
  - Set a boolean variable: `packed`
- Fix `PizzaDeliveryProcessTest`

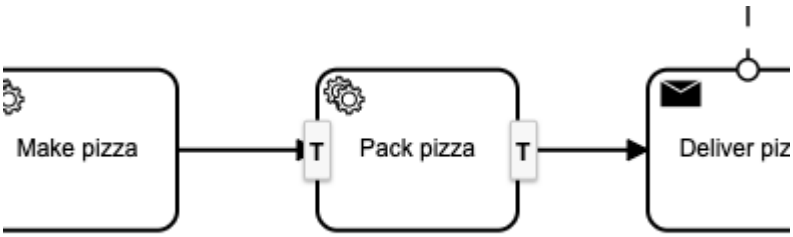

External Task Process API

```
public enum ExternalTasks {
    ;
    public enum PackPizza {
      ;
      public static final String TOPIC = "orderPizza:packPizza";

      public enum Consumes {
        ;
        public static final String TYPE =
PizzaDeliveryProcess.Variables.TYPE;
      }

      public enum Produces {
        ;
        public static final String PACKED =
PizzaDeliveryProcess.Variables.PACKED;
```

```
        }
      }
    }
```

```
externalTaskService.fetchAndLock(5, WORKER_ID)
      .topic(ExternalTasks.PackPizza.TOPIC, 1000L)
      .execute()
      .forEach(it -> {
        final var type = (String)
it.getVariables().get(ExternalTasks.PackPizza.Consumes.TYPE);
        // ...
        Variables.putValue(
            ExternalTasks.PackPizza.Produces.PACKED,
            true
          )
        // ...
      };
```

Class 15: Variable access with Camunda BPM Data

- Refactor `ApprovalProcessBean.Variables`
  - Change all variables to be of type `VariableFactory<T>` final static variableFactory APPROVAL_ID = CamundaBpmData.stringVariable("approvalId");
- Resolve all compile issues
  - Refactor delegates to use camunda-bpm-data
  - Refactor all tests
  - Try not to use `.getName()` as a quick-fix
- Use different approaches where applicable:
  - `get`, `set`, `Writers.C7.builder`, `Readers.C7.reader`, `Writers.C7.writer` ...

Class 16: Variable Guards

- Provide a Guard for "Approve request"
  - There is a failing test
  - Ensure that the task can only be completed when `APPROVAL_DECISION` is set

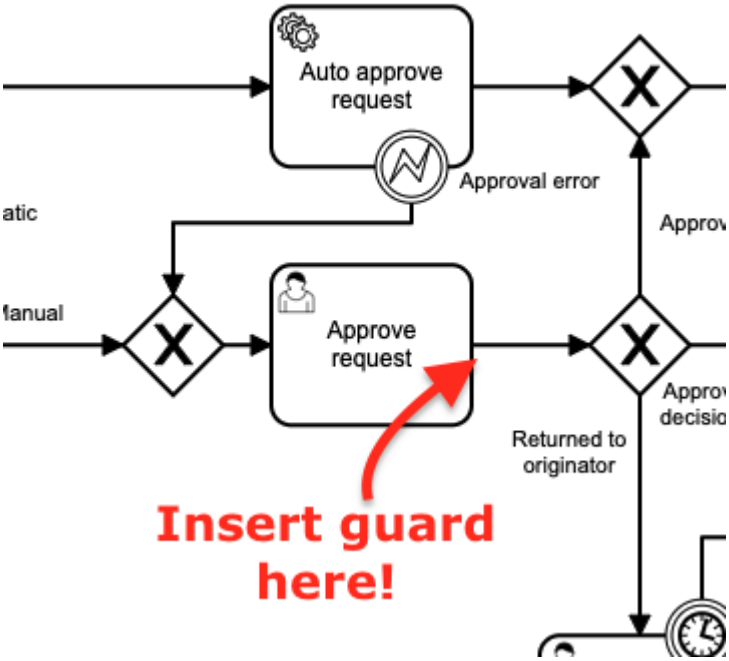

Class 17: Anti-Corruption Layer

- Provide an Anti Corruption Layer for "Pack pizza"
  - Ensure that the ExternalTaskWorker can only complete when `PACKED` is set
  - Place it in `PizzaDeliveryProcess.ExternalTask.PackPizza`
  - Use it in the `PackPizzaExternalTaskWorker`

Class 18: Camunda BPM JGiven

- Explore ApprovalScenarioTest
  - Not a single `assert` is written manually --> `ThenStage` is empty!
  - Only custom steps specific for this process in `GivenWhenStage`
  - Everything else is coming from `c7-jgiven`
- Complete the missing scenarios
- Run `./mvnw clean install`
- Explore the HTML report in `orchestration/target/jgiven-reports/html/index.html`