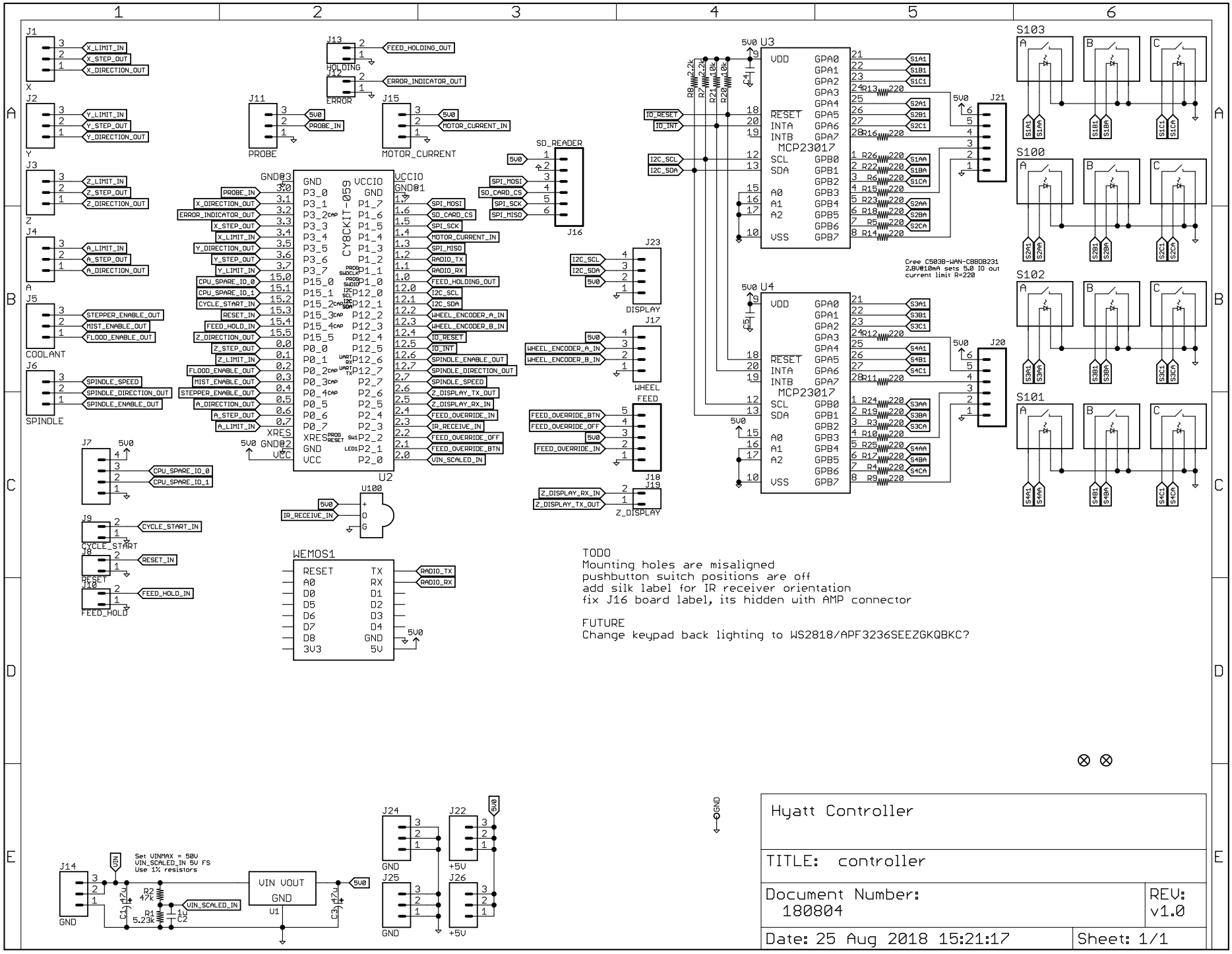
J1 X
X_LIMIT_IN
X_STEP_OUT
X_DIRECTION_OUT
J2 Y
Y_LIMIT_IN
Y_STEP_OUT
Y_DIRECTION_OUT
J3 Z
Z_LIMIT_IN
Z_STEP_OUT
Z_DIRECTION_OUT
J4 A
A_LIMIT_IN
A_STEP_OUT
A_DIRECTION_OUT
J5 COOLANT
STEPPER_ENABLE_OUT
MIST_ENABLE_OUT
FLOOD_ENABLE_OUT
J6 SPINDLE
SPINDLE_SPEED
SPINDLE_DIRECTION_OUT
SPINDLE_ENABLE_OUT
J7
CPU_SPARE_IO_0
CPU_SPARE_IO_1
J9 CYCLE_START
CYCLE_START_IN
J8 RESET
RESET_IN
J10 FEED_HOLD
FEED_HOLD_IN
J13 HOLDING
FEED_HOLDING_OUT
J12 ERROR
ERROR_INDICATOR_OUT
J11 PROBE
PROBE_IN
J15 MOTOR_CURRENT
MOTOR_CURRENT_IN
U2 CY8CKIT-059
VCCIO
GND
P3_0
P3_1
P3_2
P3_3
P3_4
P3_5
P3_6
P3_7
P15_0
P15_1
P15_2
P15_3
P15_4
P15_5
P0_0
P0_1
P0_2
P0_3
P0_4
P0_5
P0_6
P0_7
XRES
P1_7
P1_6
P1_5
P1_4
P1_3
P1_2
P1_1
P1_0
P12_0
P12_1
P12_2
P12_3
P12_4
P12_5
P12_6
P12_7
P2_7
P2_6
P2_5
P2_4
P2_3
P2_2
P2_1
P2_0
SPI_MOSI
SD_CARD_CS
SPI_SCK
MOTOR_CURRENT_IN
SPI_MISO
RADIO_TX
RADIO_RX
FEED_HOLDING_OUT
I2C_SCL
I2C_SDA
WHEEL_ENCODER_A_IN
WHEEL_ENCODER_B_IN
IO_RESET
IO_INT
SPINDLE_ENABLE_OUT
SPINDLE_DIRECTION_OUT
SPINDLE_SPEED
Z_DISPLAY_TX_OUT
Z_DISPLAY_RX_IN
FEED_OVERRIDE_IN
IR_RECEIVE_IN
FEED_OVERRIDE_OFF
FEED_OVERRIDE_BTN
VIN_SCALED_IN
SD_READER J16
J23 DISPLAY
J17 WHEEL
FEED J18 J19 Z_DISPLAY
U100
WEMOS1
RESET
A0
D0
D5
D6
D7
D8
3V3
TX
RX
D1
D2
D3
D4
GND
5V
U3 MCP23017
U4 MCP23017
VDD
RESET
INTA
INTB
SCL
SDA
A0
A1
A2
VSS
GPA0
GPA1
GPA2
GPA3
GPA4
GPA5
GPA6
GPA7
GPB0
GPB1
GPB2
GPB3
GPB4
GPB5
GPB6
GPB7
J21
J20
Cree C503B-WAN-CBBDB231
2.8V@10mA sets 5.0 IO out
current limit R=220
S103
S100
S102
S101
TODO
Mounting holes are misaligned
pushbutton switch positions are off
add silk label for IR receiver orientation
fix J16 board label, its hidden with AMP connector
FUTURE
Change keypad back lighting to WS2818/APF3236SEEZGKQBKC?
J14
Set VINMAX = 50V
VIN_SCALED_IN 5V FS
Use 1% resistors
VIN VOUT GND
U1
R2 47k
R1 5.23k
C1 47u
C2 1u
C3 47u
J24 GND
J22 +5V
J25 GND
J26 +5V
Hyatt Controller
TITLE: controller
Document Number: 180804
REV: v1.0
Date: 25 Aug 2018 15:21:17
Sheet: 1/1