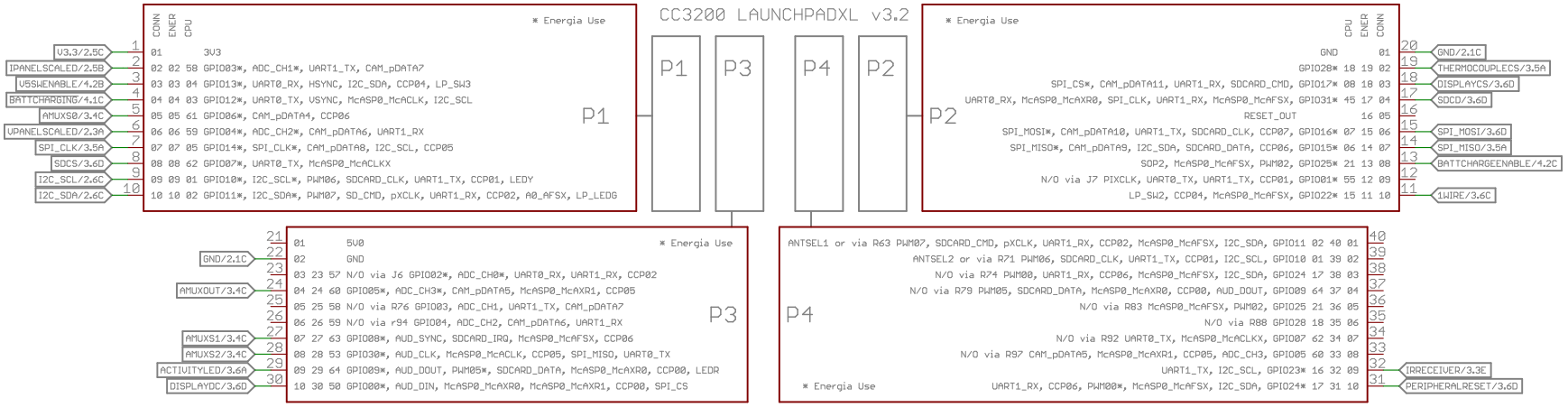

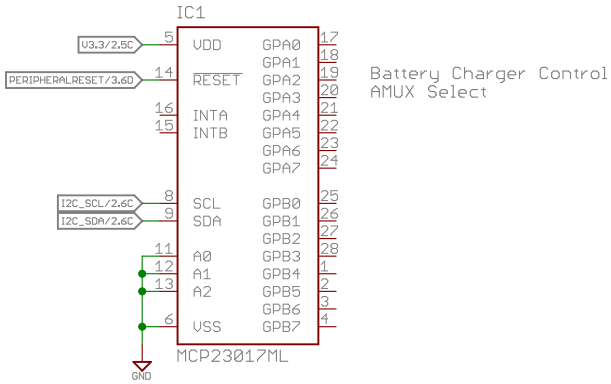

open hardware

CPU

TITLE: solohm

Document Number:

REV: 0.1

Date: 13 Jan 2015 01:26:49

Sheet: 1/4