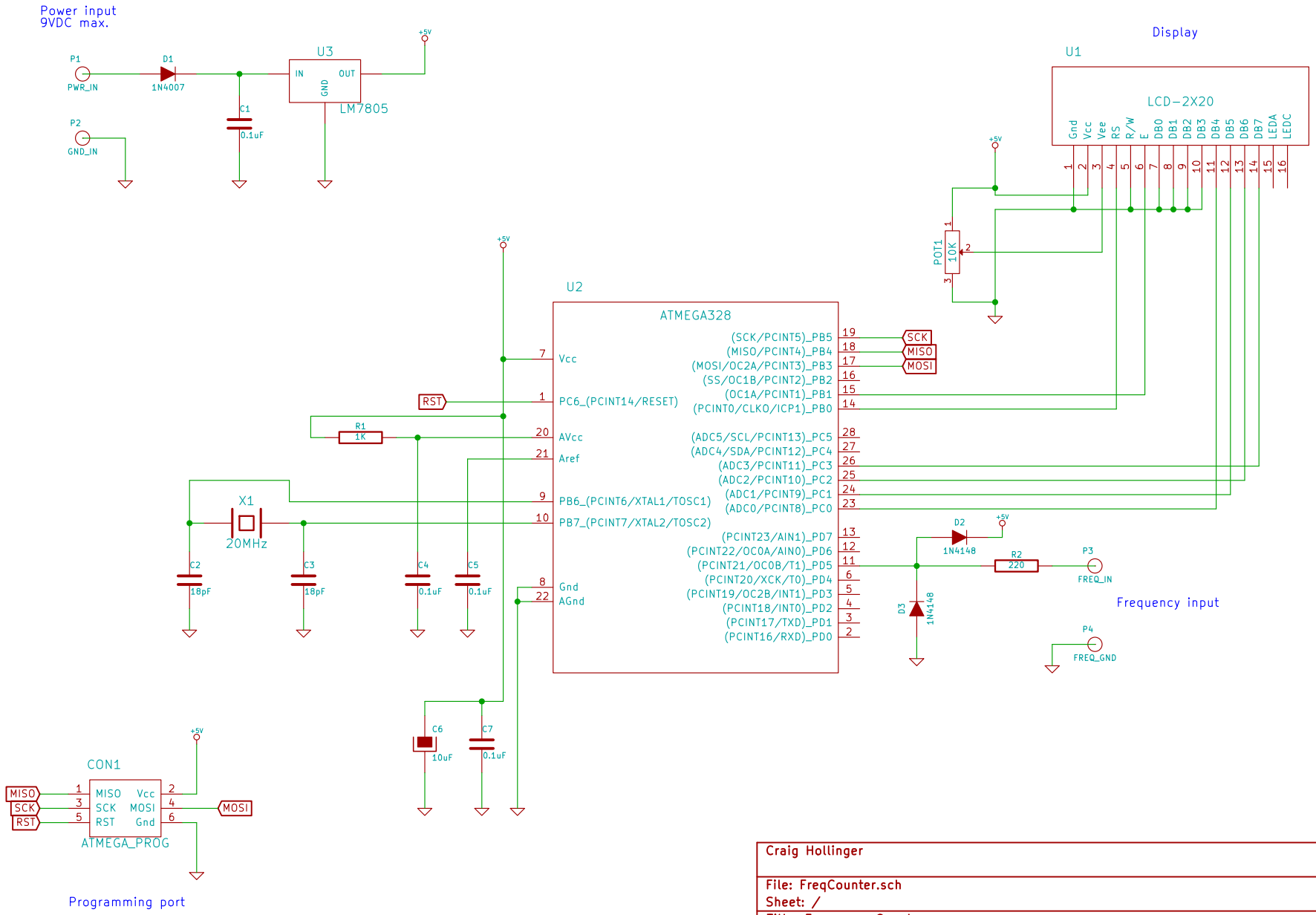

Craig Hollinger		
File: FreqCounter.sch		
Sheet: /		
Title: Frequency Counter		
Size: A	Date: 2 aug 2016	Rev: A
KiCad E.D.A.		Id: 1/1