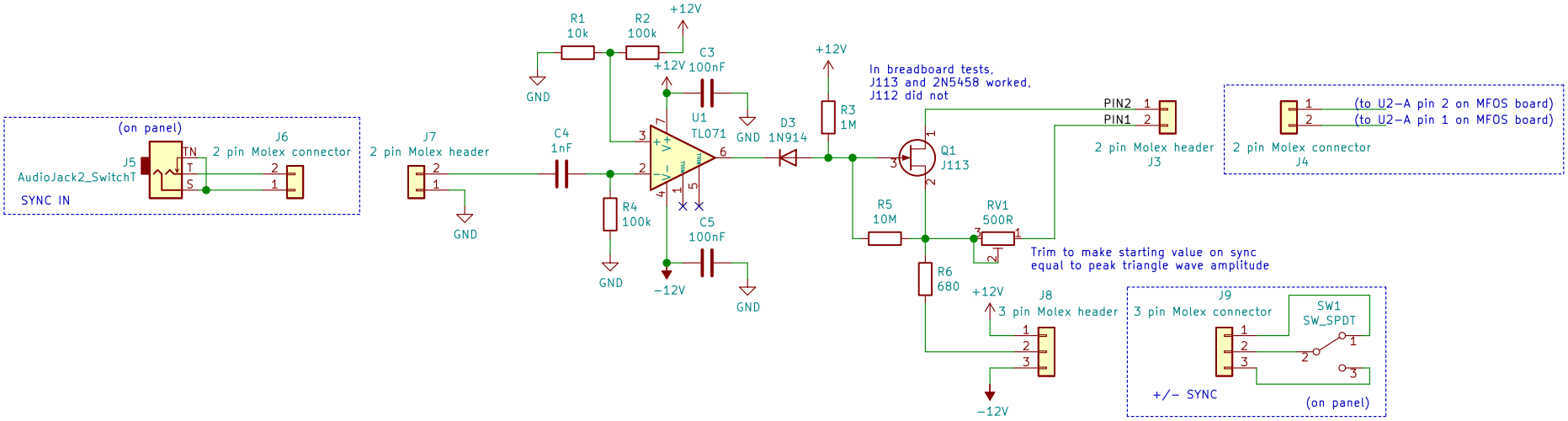

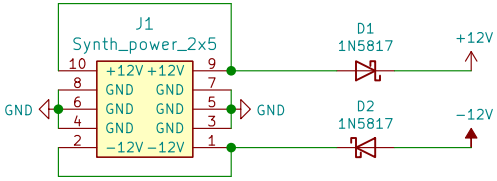

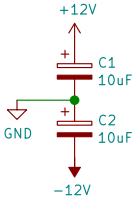

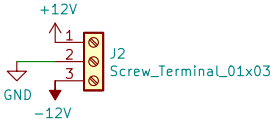

Wires to ±12 V and ground
on MFOS board

Note: Omit C2, C6 on MFOS board

Provides power header and sync input
Sync mod adapted from design by Tim (Servo) Parkhurst
Rich Holmes / Analog Output

Sheet: /
File: MFOS_VCLFO_aux.sch

Title: MFOS VC LFO aux board

Size: USLetter	Date: 2020−11−21	Rev:
KiCad E.D.A. kicad 5.1.9−73d0e3b20d88ubuntu20.04.1		Id: 1/1