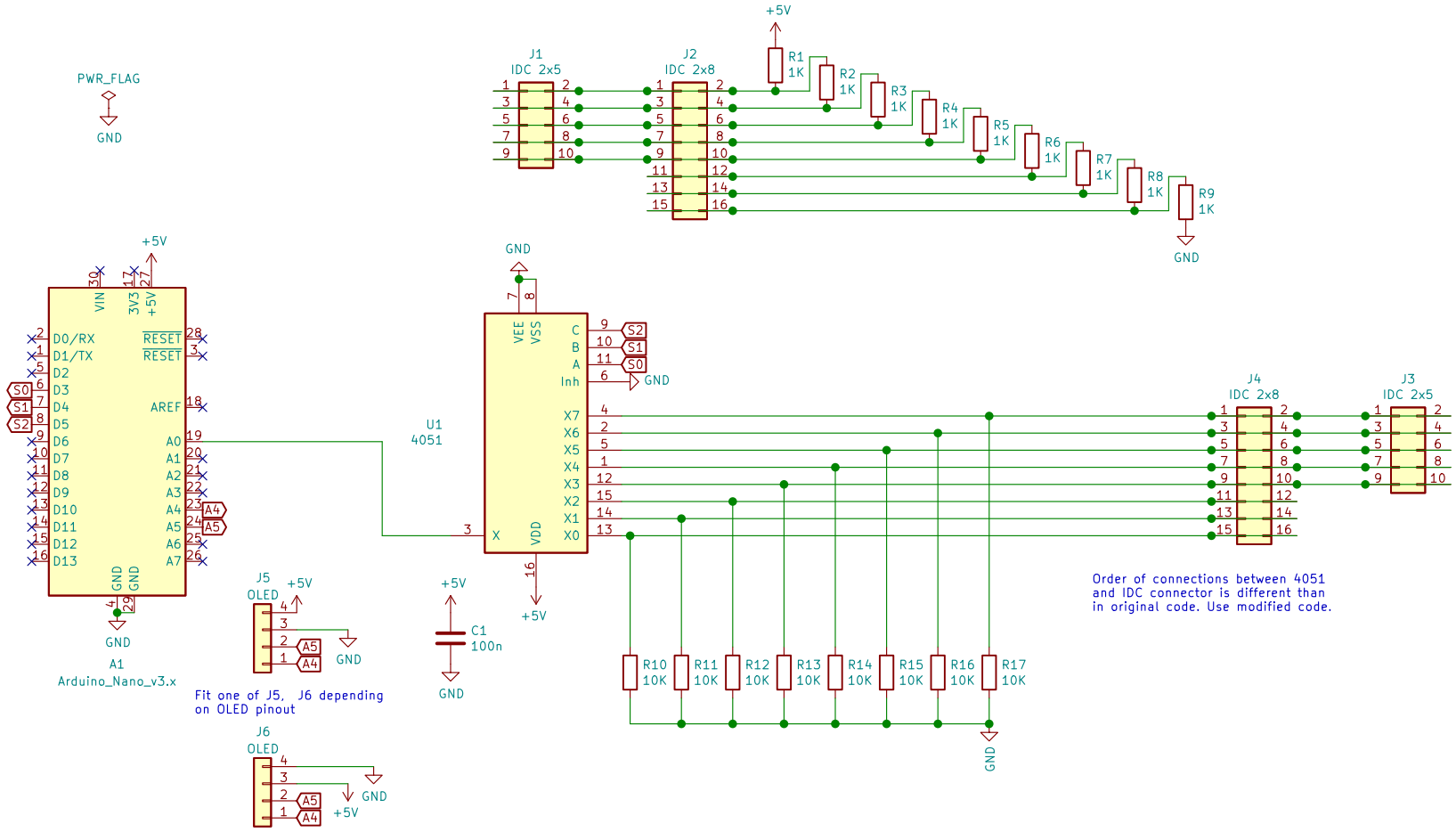

forked to https://github.com/holmesrichards/cabletester with slight mods

tomarus / https://github.com/tomarus/cabletester

Sheet: /

File: cabletester.sch

Title: Simple Eurorack Cable Tester

Size: USLetter	Date:	Rev:
KiCad E.D.A. kicad 5.1.6-c6e7f7d86ubuntu18.04.1		Id: 1/1