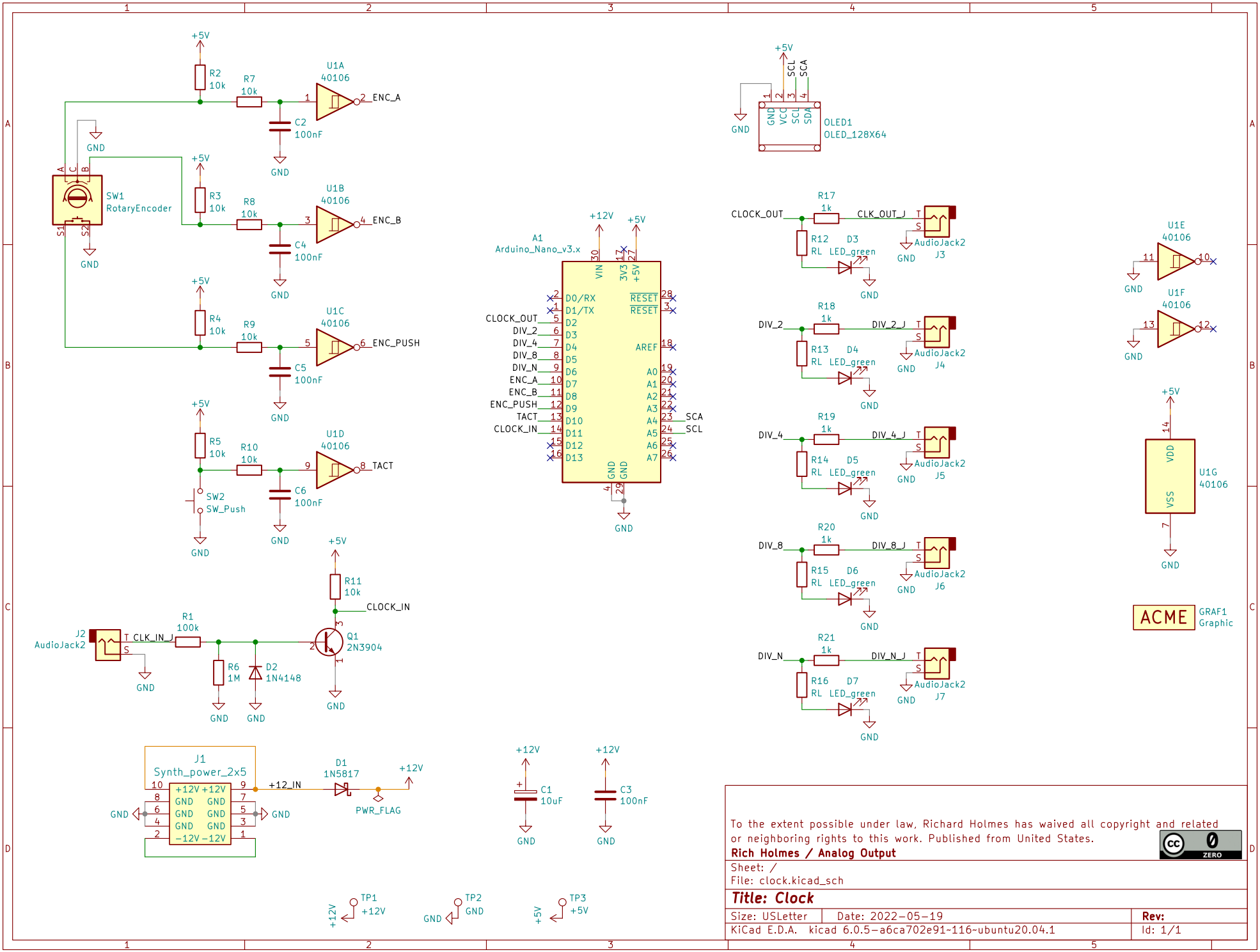

To the extent possible under law, Richard Holmes has waived all copyright and related or neighboring rights to this work. Published from United States.

Rich Holmes / Analog Output

Sheet: /

File: clock.kicad_sch

Title: Clock

Size: USLetter	Date: 2022-05-19	Rev:
KiCad E.D.A. kicad 6.0.5-a6ca702e91~116~ubuntu20.04.1		Id: 1/1