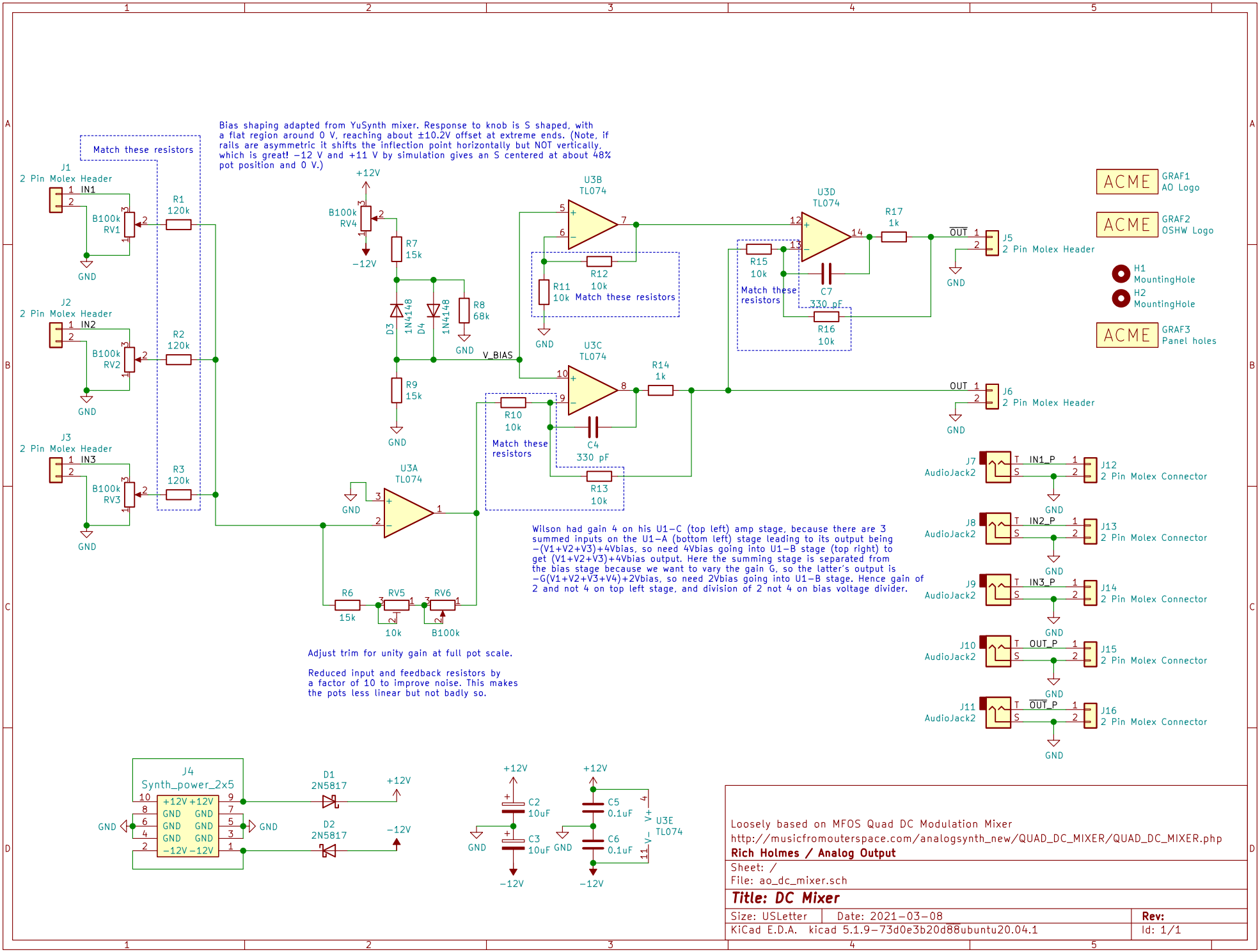

Loosely based on MFOS Quad DC Modulation Mixer
http://musicfromouterspace.com/analogsynth_new/QUAD_DC_MIXER/QUAD_DC_MIXER.php

Rich Holmes / Analog Output

Sheet: /
File: ao_dc_mixer.sch

Title: DC Mixer

Size: USLetter	Date: 2021−03−08	Rev:
KiCad E.D.A. kicad 5.1.9−73d0e3b20d88ubuntu20.04.1		Id: 1/1