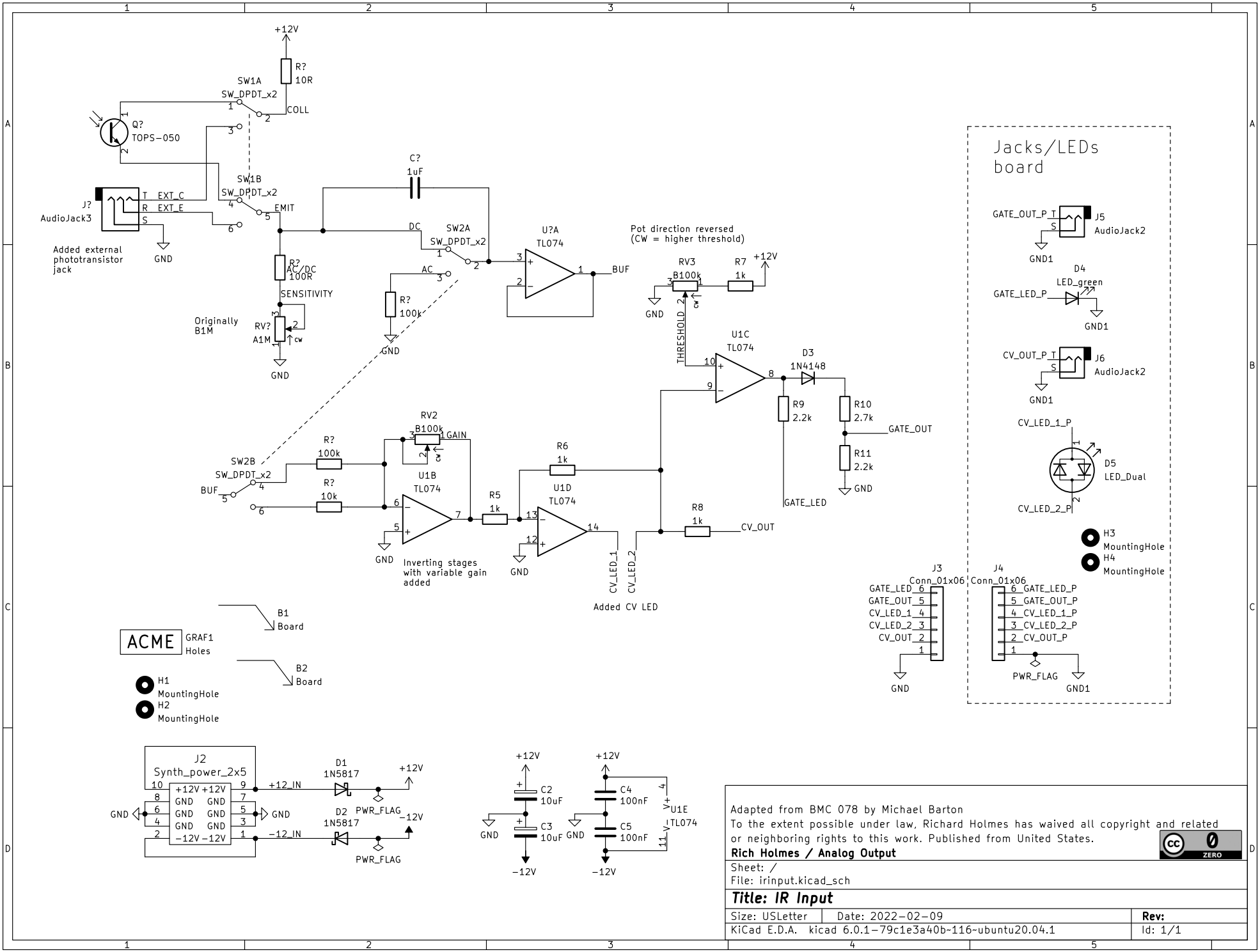

Adapted from BMC 078 by Michael Barton

To the extent possible under law, Richard Holmes has waived all copyright and related or neighboring rights to this work. Published from United States.

Rich Holmes / Analog Output

Sheet: /

File: irinput.kicad_sch

Title: IR Input

Size: USLetter	Date: 2022-02-09	Rev:
KiCad E.D.A. kicad 6.0.1-79c1e3a40b-116~ubuntu20.04.1		Id: 1/1