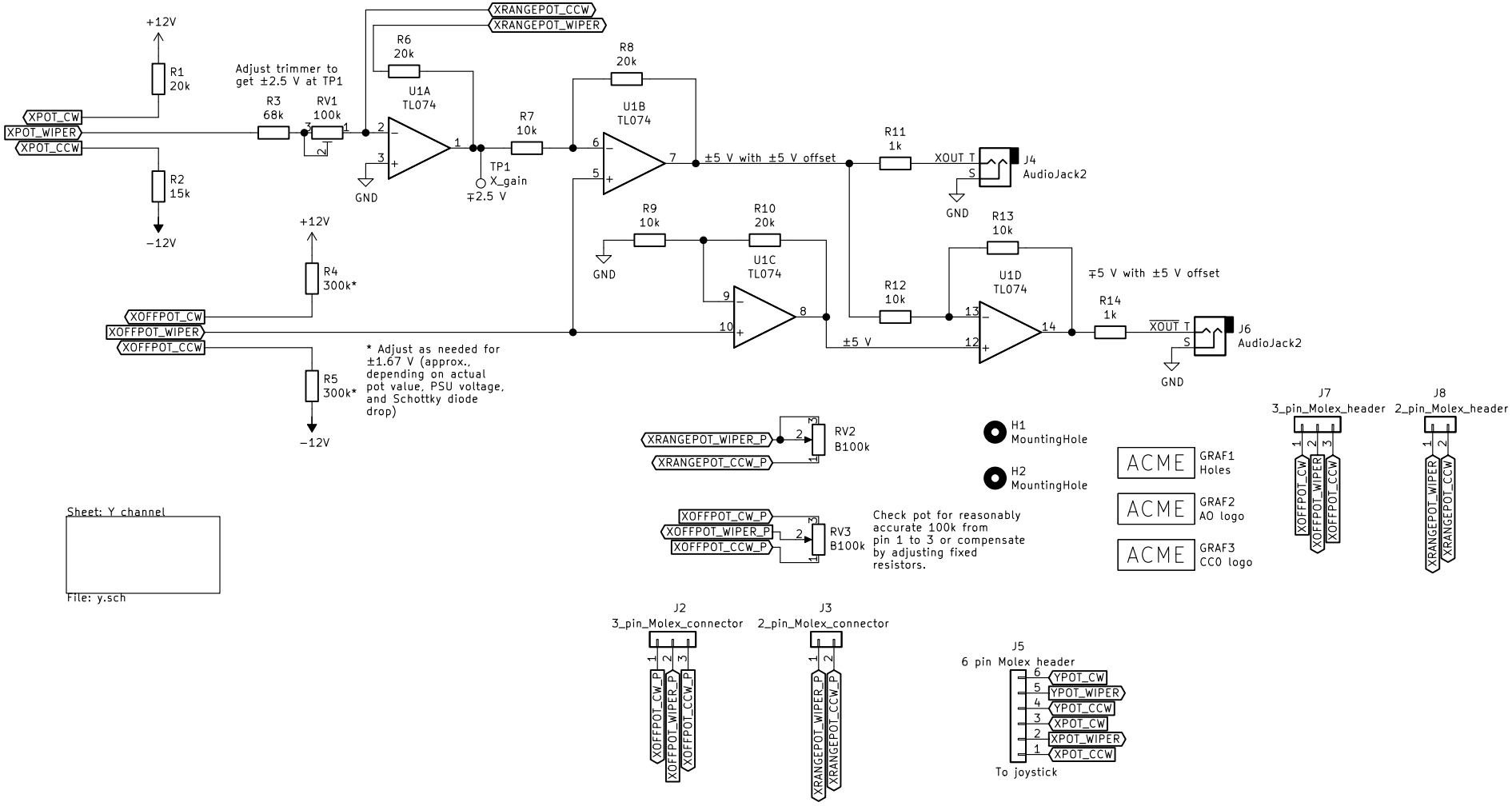

To the extent possible under law, Richard Holmes has waived all copyright and related or neighboring rights to this work. Published from United States.

Rich Holmes / Analog Output

Sheet: /
File: joystick.sch

Title: Joystick

Size: USLetter	Date: 2020-11-27	Rev:
KiCad E.D.A. kicad 5.1.12-84ad8e8a8692ubuntu20.04.1		Id: 1/2

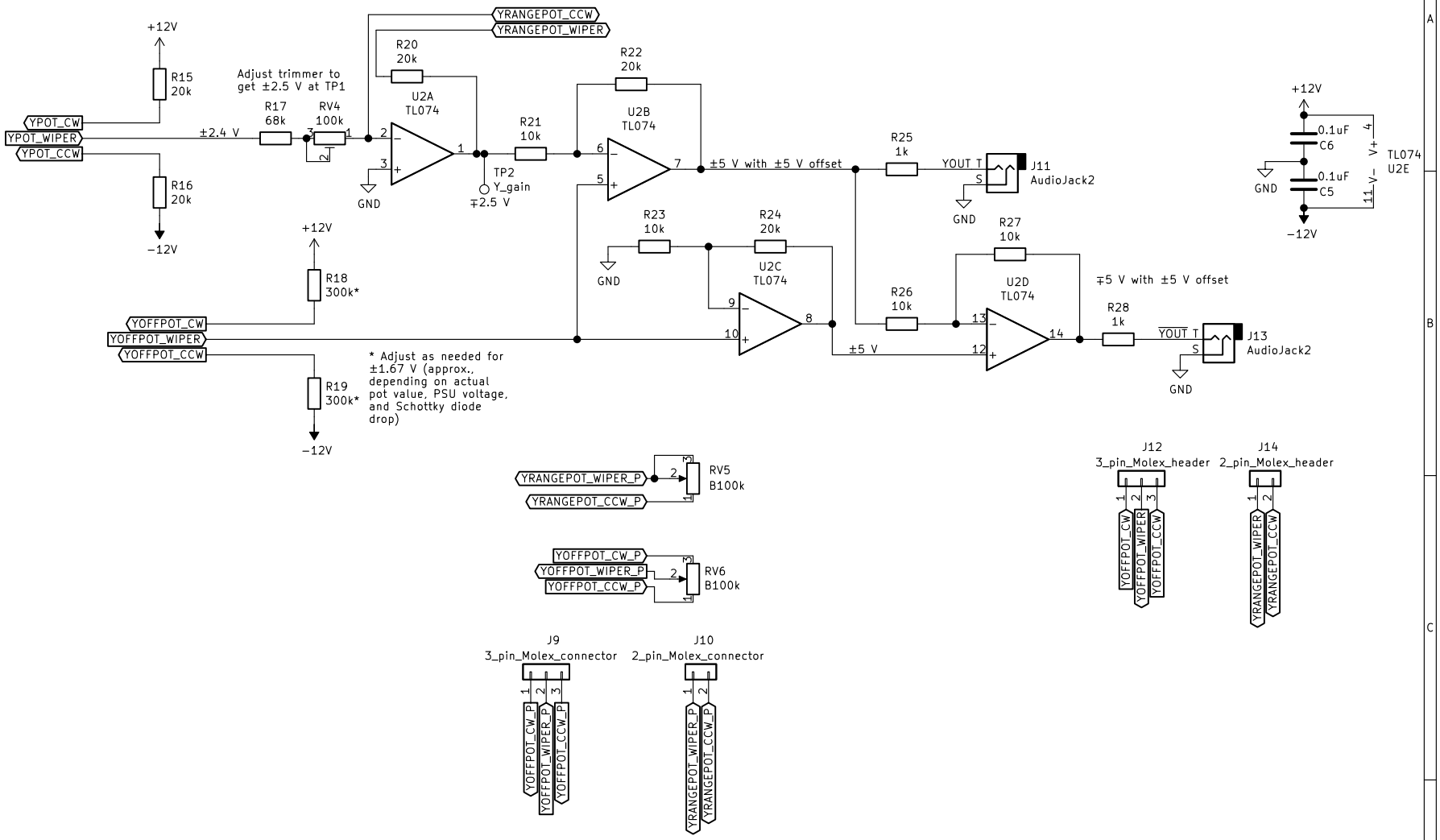

To the extent possible under law, Richard Holmes has waived all copyright and related or neighboring rights to this work. Published from United States.

Rich Holmes / Analog Output

Sheet: /Y channel/
File: y.sch

Title: Joystick

Size: USLetter	Date: 2020-11-27	**Rev:**
KiCad E.D.A. kicad 5.1.12-84ad8e8a8692ubuntu20.04.1		Id: 2/2