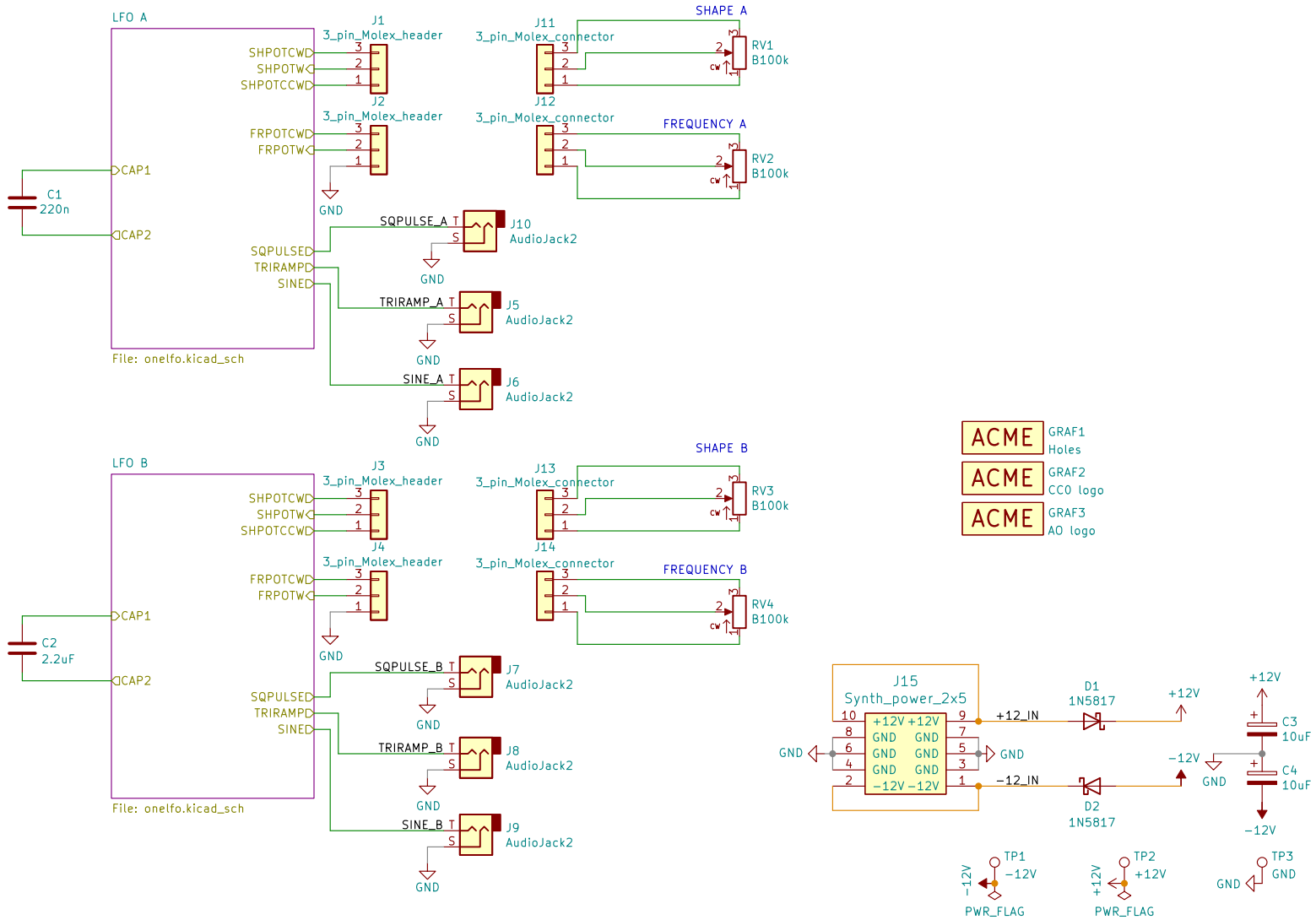

Core based on https://kassu2000.blogspot.com/2015/10/variable-waveshape-lfo.html

Rich Holmes / Analog Output

Sheet: /

File: kdlfo.kicad_sch

Title: Variable waveshape LFO

Size: USLetter	Date: 2022-03-28	**Rev:**
KiCad E.D.A. kicad 6.0.5-a6ca702e91~116~ubuntu20.04.1		Id: 1/3

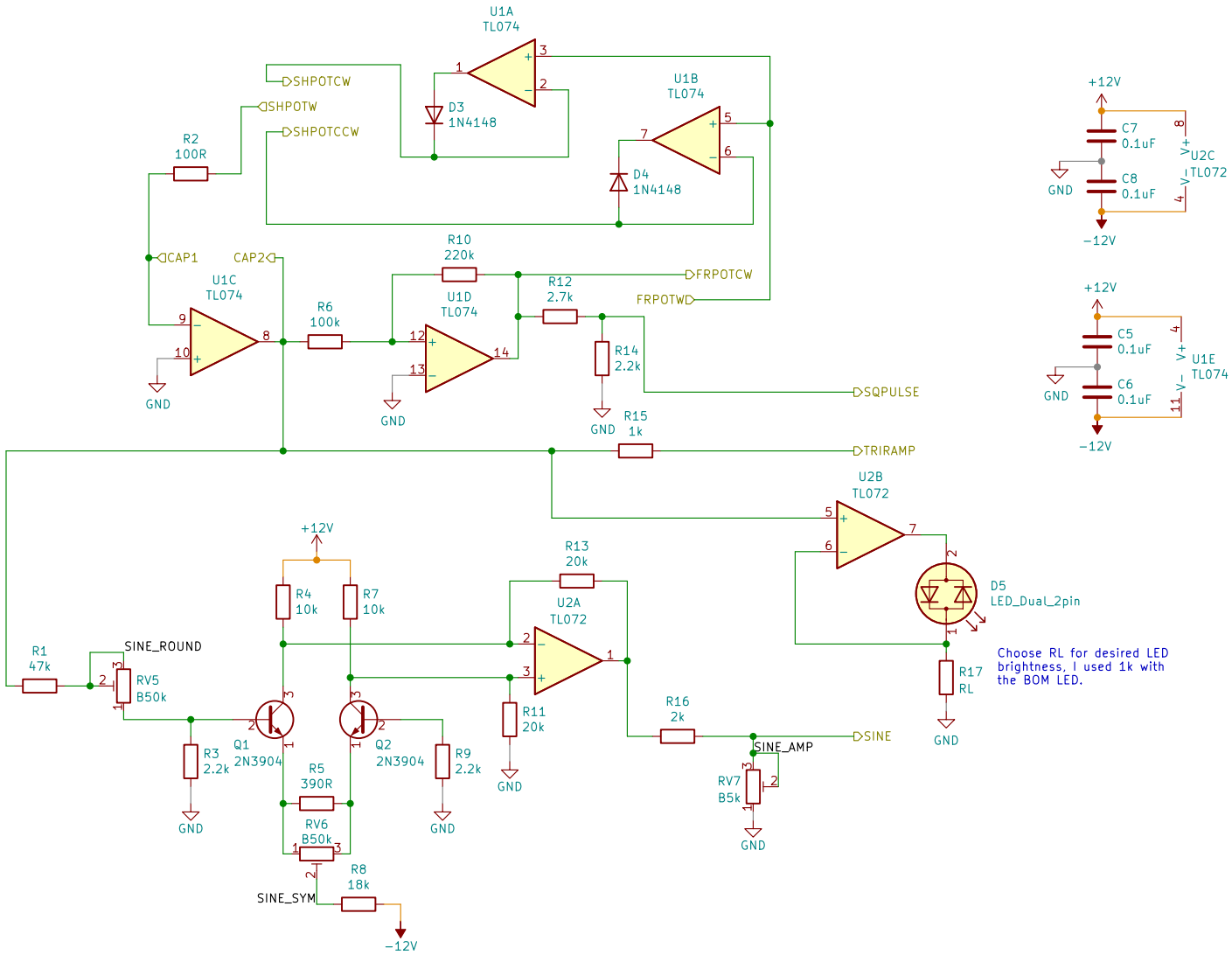

Core based on https://kassu2000.blogspot.com/2015/10/variable-waveshape-lfo.html

Rich Holmes / Analog Output

Sheet: /LFO A/

File: onelfo.kicad_sch

Title: Variable waveshape LFO

Size: USLetter	Date: 2022-03-28	**Rev:**
KiCad E.D.A. kicad 6.0.5-a6ca702e91~116~ubuntu20.04.1		Id: 2/3

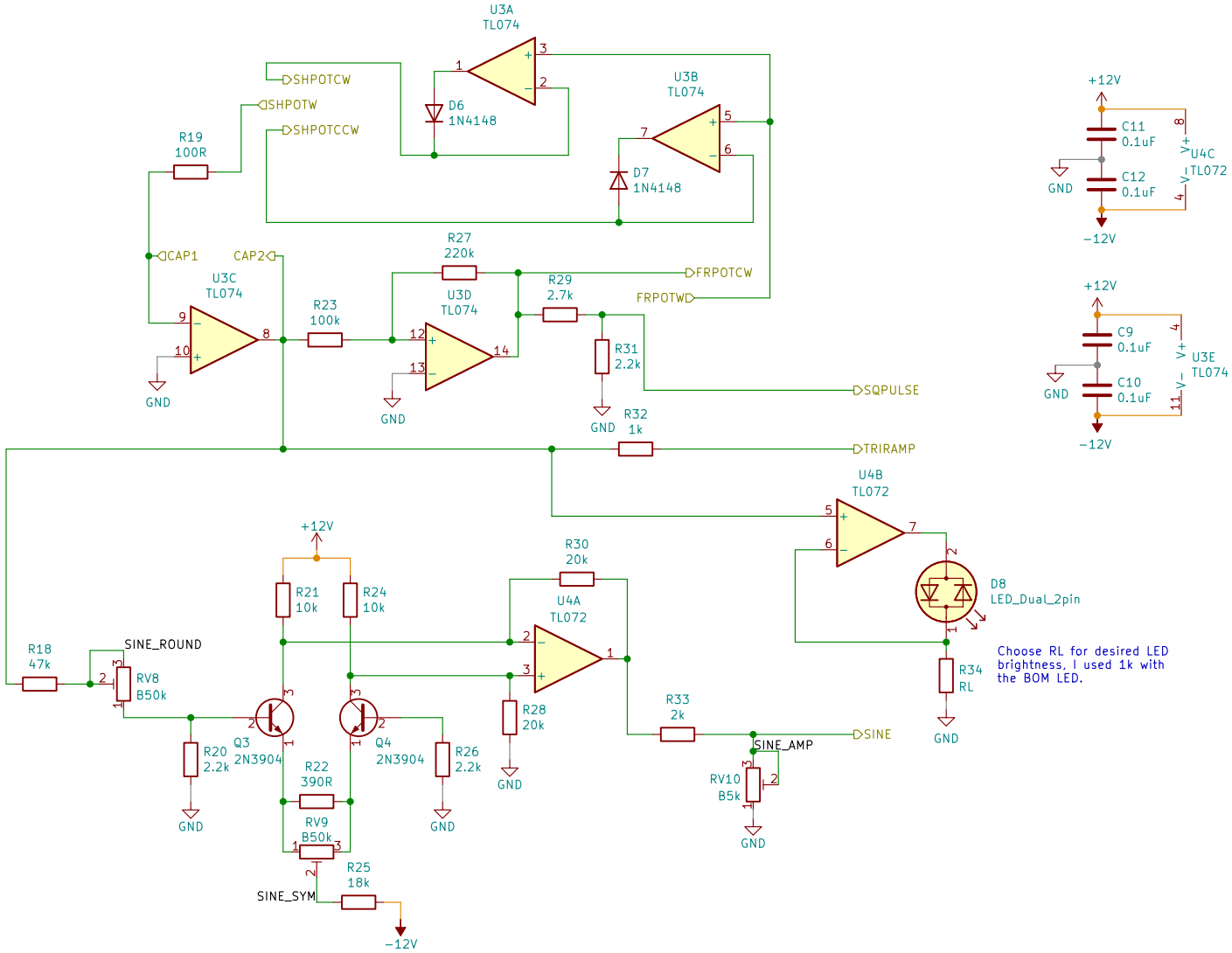

Core based on https://kassu2000.blogspot.com/2015/10/variable-waveshape-lfo.html

Rich Holmes / Analog Output

Sheet: /LFO B/

File: onelfo.kicad_sch

Title: Variable waveshape LFO

Size: USLetter	Date: 2022-03-28	**Rev:**
KiCad E.D.A. kicad 6.0.5-a6ca702e91~116~ubuntu20.04.1		Id: 3/3