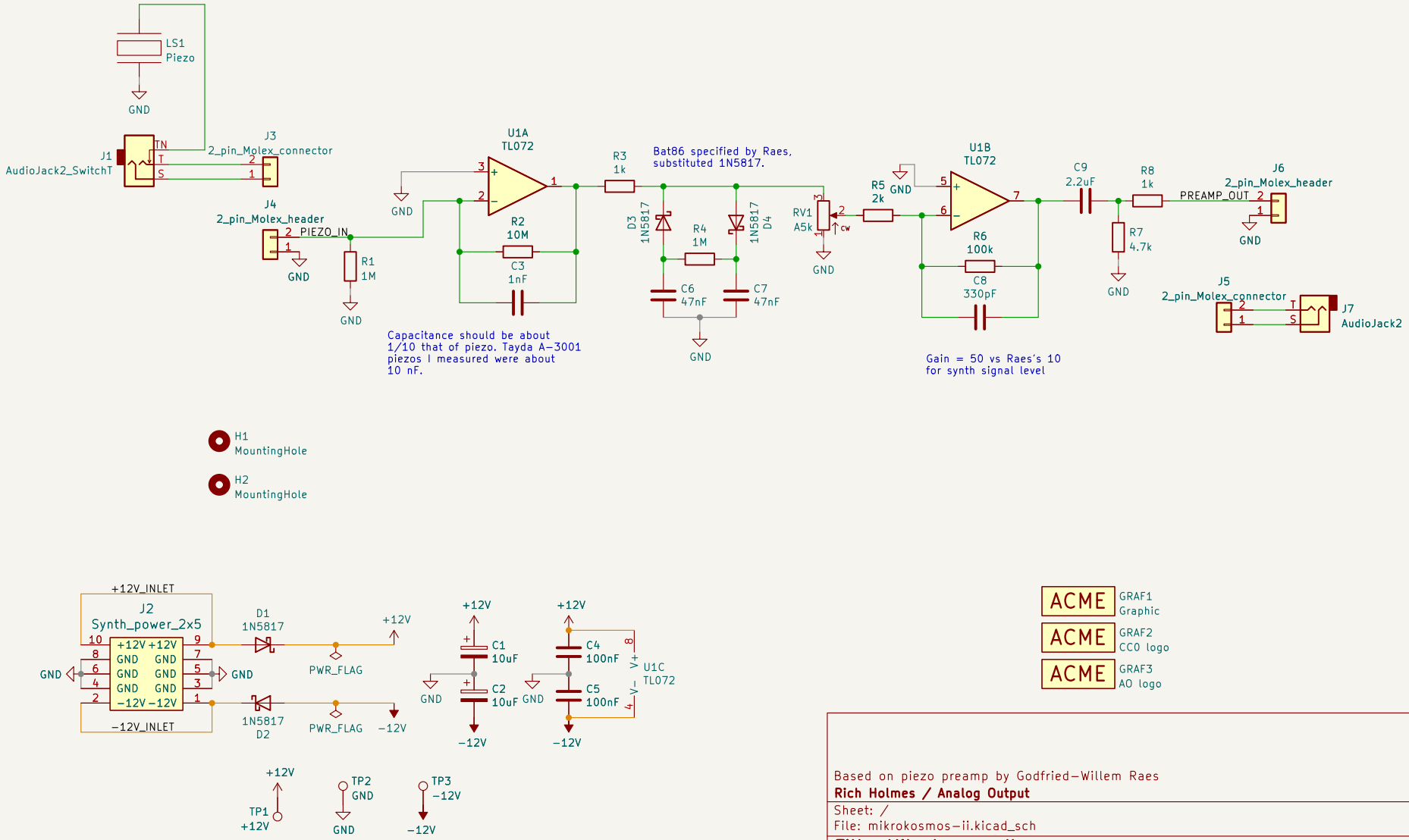

ACME GRAF1 Graphic

ACME GRAF2 CCO logo

ACME GRAF3 AO logo

Based on piezo preamp by Godfried-Willem Raes

Rich Holmes / Analog Output

Sheet: /

File: mikrokosmos-ii.kicad_sch

Title: Mikrokosmos II

Size: USLetter	Date: 2020-10-21	Rev:
KiCad E.D.A. kicad 6.0.8-f2edbf62ab~116~ubuntu22.04.1		Id: 1/1