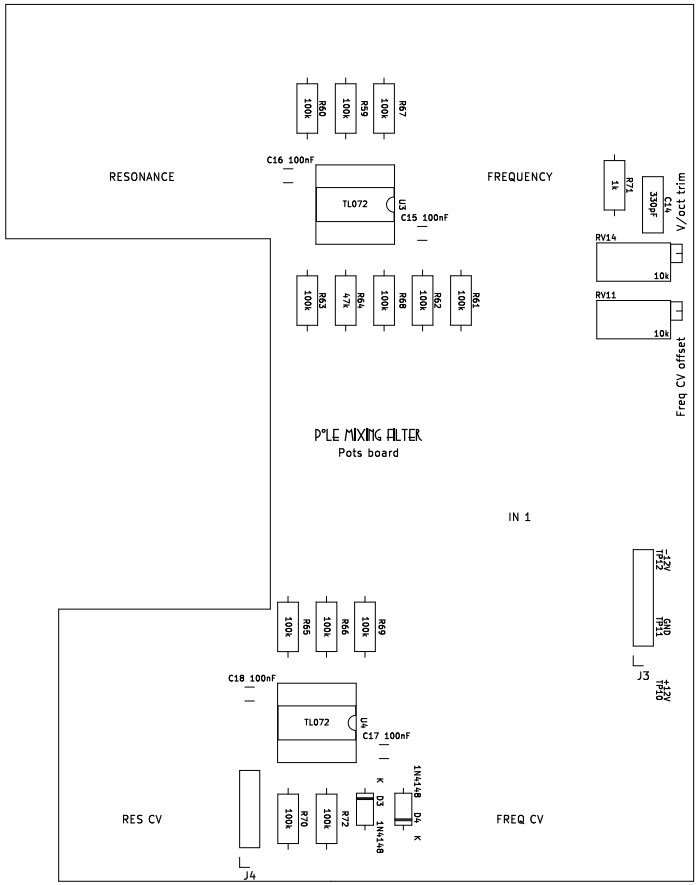
RESONANCE
FREQUENCY
C16 100nF
TL072
U3
C15 100nF
R60 100k
R59 100k
R67 100k
R71 1k
C14 330pF
V/oct trim
RV14 10k
RV11 10k
Freq CV offset
R63 100k
R64 47k
R68 100k
R62 100k
R61 100k
P°LE MIXING FILTER
Pots board
IN 1
TP22 +12V
TP23 GND
TP24 -12V
J3
R65 100k
R66 100k
R69 100k
C18 100nF
TL072
U4
C17 100nF
1N4148 D4 K
D3 1N4148
RES CV
R70 100k
R72 100k
FREQ CV
J4

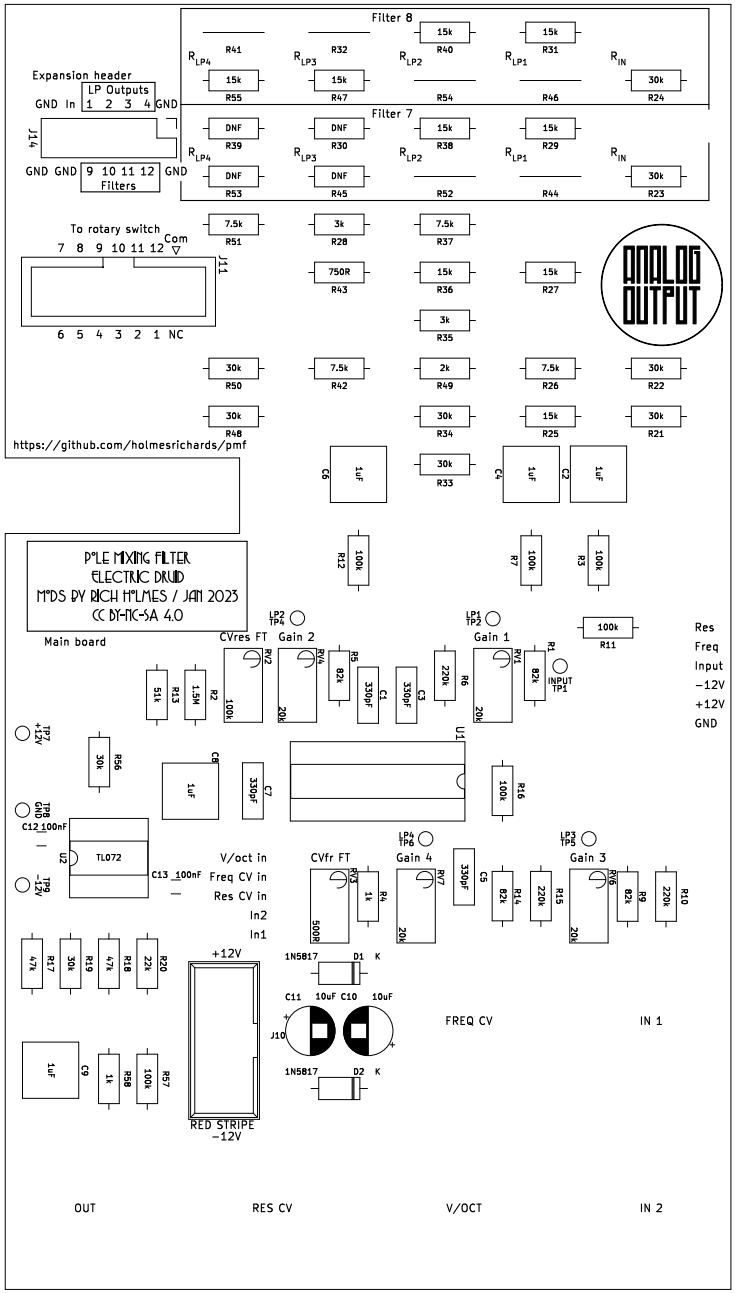
Filter 8
Filter 7
Expansion header
LP Outputs
GND In 1 2 3 4 GND
J14
GND GND 9 10 11 12 GND
Filters
To rotary switch
7 8 9 10 11 12 Com
J11
6 5 4 3 2 1 NC
ANALOG OUTPUT
https://github.com/holmesrichards/pmf
P°LE MIXING FILTER
ELECTRIC DRUID
M°DS BY RICH H°LMES / JAN 2023
CC BY-NC-SA 4.0
Main board
CVres FT
Gain 2
Gain 1
INPUT TP1
Res
Freq
Input
−12V
+12V
GND
TP27 +12V
TP28 GND
TP29 -12V
C12 100nF
TL072
U2
C13 100nF
V/oct in
Freq CV in
Res CV in
In2
In1
CVfr FT
Gain 4
Gain 3
+12V
RED STRIPE
−12V
1N5817 D1 K
1N5817 D2 K
C11 10uF C10 10uF
J10
FREQ CV
IN 1
OUT
RES CV
V/OCT
IN 2