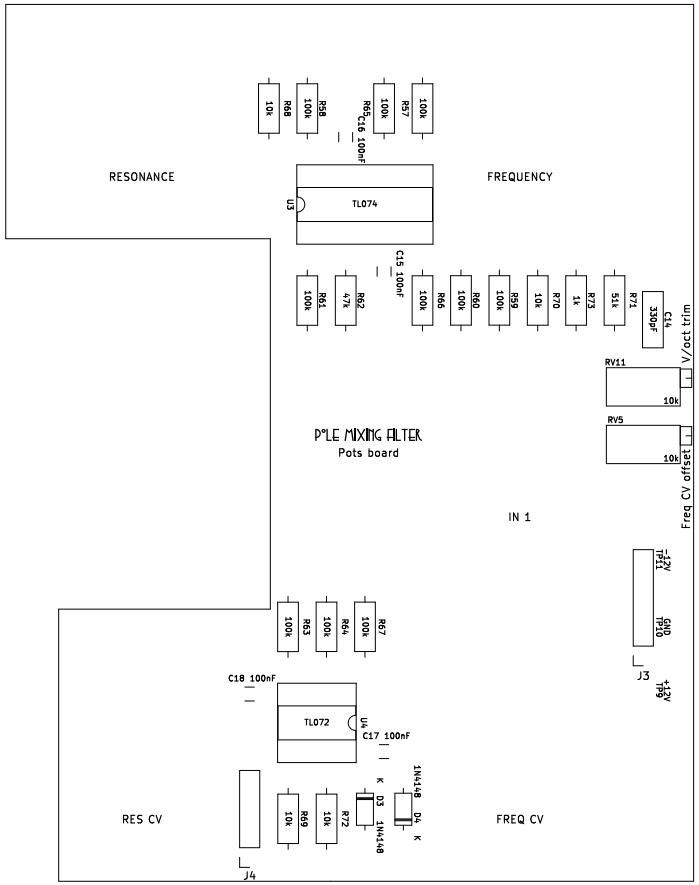
RESONANCE
FREQUENCY
TL074
U5
C16 100nF
C15 100nF
V/oct trim
Freq CV offset
POLE MIXING FILTER
Pots board
IN 1
J3
C18 100nF
TL072
U4
C17 100nF
RES CV
FREQ CV
J4

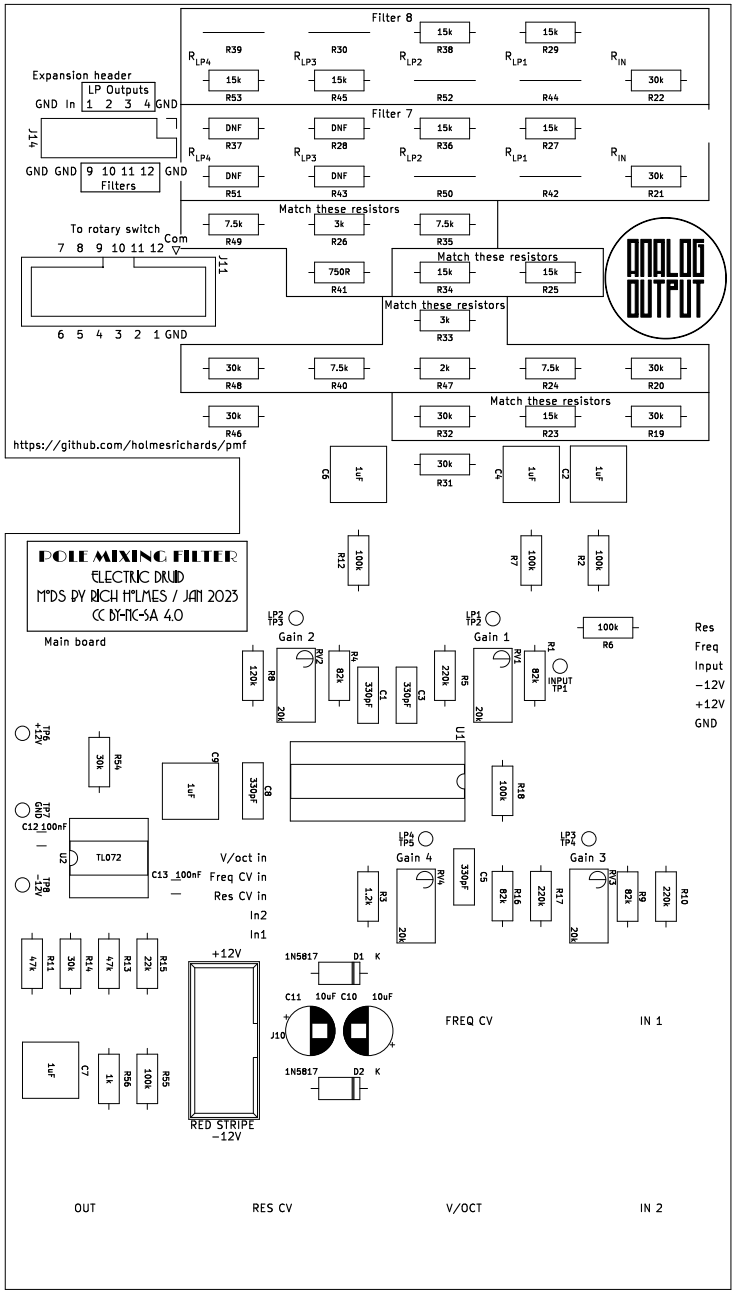
Filter 8
Filter 7
Expansion header
LP Outputs
GND In 1 2 3 4 GND
J14
GND GND 9 10 11 12 GND
Filters
To rotary switch
7 8 9 10 11 12
Com
J11
6 5 4 3 2 1 GND
Match these resistors
ANALOG OUTPUT
https://github.com/holmesrichards/pmf
POLE MIXING FILTER
ELECTRIC DRUID
MODS BY RICH HOLMES / JAN 2023
CC BY-NC-SA 4.0
Main board
Gain 2
Gain 1
Gain 4
Gain 3
INPUT TP1
Res
Freq
Input
−12V
+12V
GND
V/oct in
Freq CV in
Res CV in
In2
In1
+12V
RED STRIPE
−12V
FREQ CV
IN 1
OUT
RES CV
V/OCT
IN 2