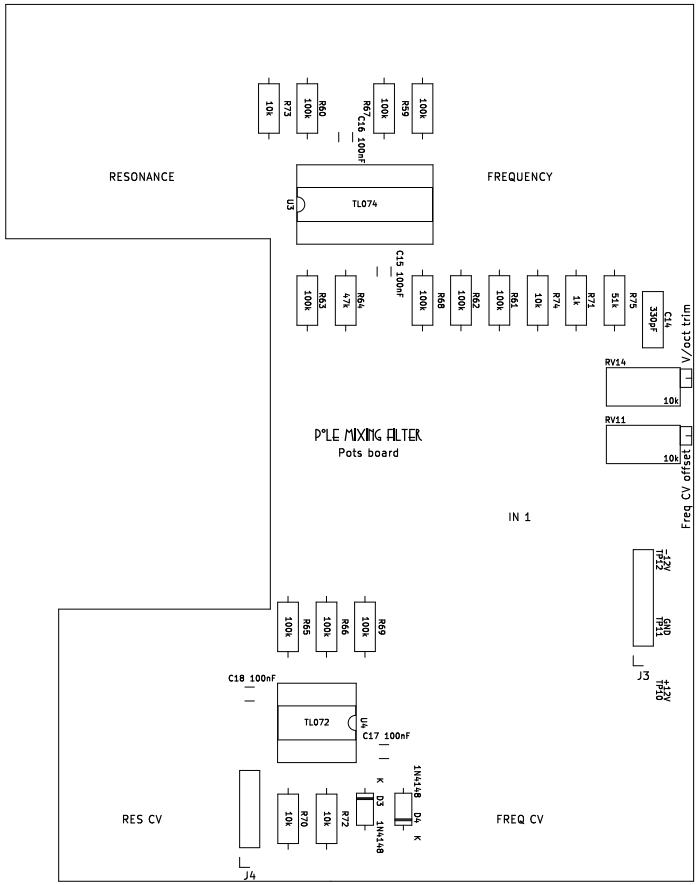
RESONANCE
FREQUENCY
TL074
U5
C15 100nF
C16 100nF
R73 10k
R60 100k
R67
R59 100k
R63 100k
R64 47k
R68 100k
R62 100k
R61 100k
R74 10k
R74 1k
R75 51k
C14 330pF
V/oct trim
RV14 10k
RV11 10k
Freq CV offset
P°LE MIXING FILTER
Pots board
IN 1
TP22 +12V
TP23 GND
TP24 -12V
J3
R65 100k
R66 100k
R69 100k
C18 100nF
TL072
U4
C17 100nF
RES CV
R70 10k
R72 10k
D3 1N4148
D4 1N4148
FREQ CV
J4

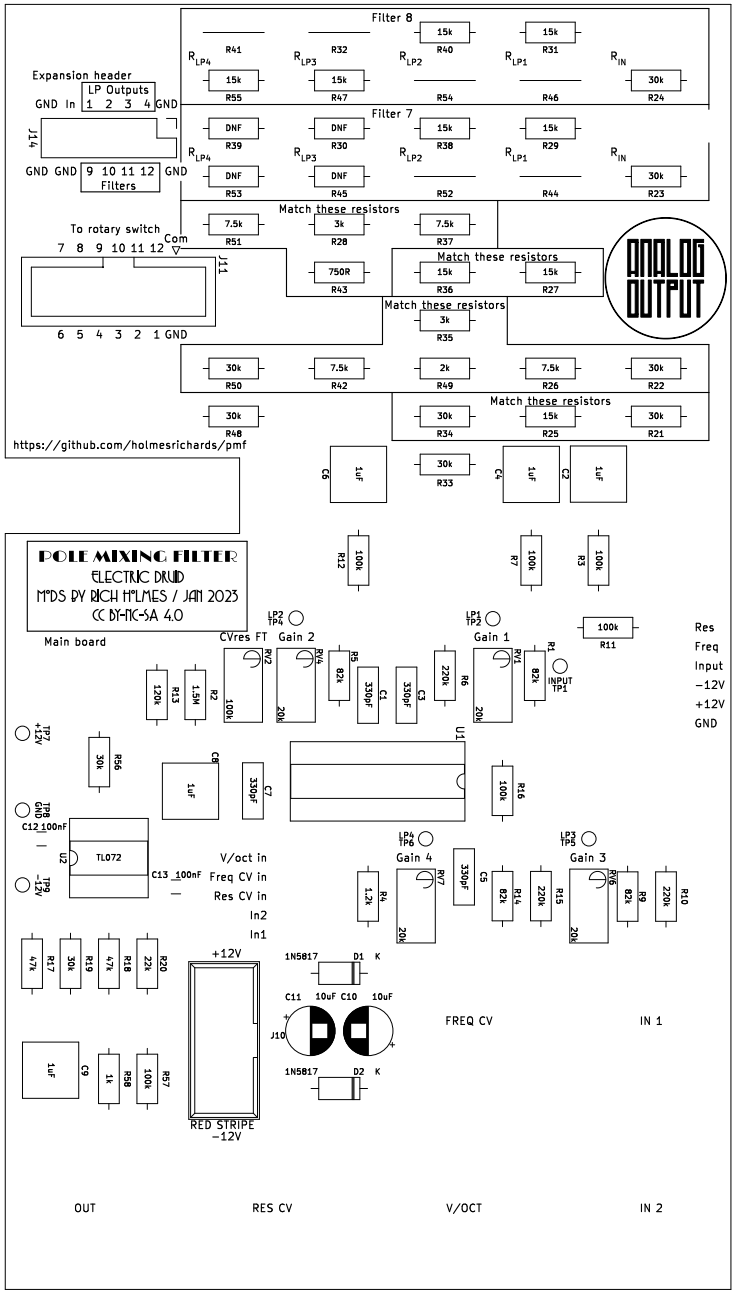
Filter 8
Filter 7
Expansion header
LP Outputs
GND In 1 2 3 4 GND
J14
GND GND 9 10 11 12 GND
Filters
To rotary switch
7 8 9 10 11 12 Com
J11
6 5 4 3 2 1 GND
Match these resistors
R41
R32
R40 15k
R31 15k
R55 15k
R47 15k
R54
R46
R24 30k
R39 DNF
R30 DNF
R38 15k
R29 15k
R53 DNF
R45 DNF
R52
R44
R23 30k
R51 7.5k
R28 3k
R37 7.5k
R43 750R
R36 15k
R27 15k
R35 3k
R50 30k
R42 7.5k
R49 2k
R26 7.5k
R22 30k
R48 30k
R34 30k
R25 15k
R21 30k
R33 30k
https://github.com/holmesrichards/pmf
C6 1uF
C4 1uF
C2 1uF
POLE MIXING FILTER
ELECTRIC DRUID
MODS BY RICH HOLMES / JAN 2023
CC BY-NC-SA 4.0
Main board
R12 100k
R7 100k
R3 100k
LP2 TP4
CVres FT
Gain 2
LP1 TP2
Gain 1
R11 100k
Res
Freq
Input
−12V
+12V
GND
RV2 100k
RV4 20k
R5 82k
C1 330pF
C3 330pF
R6 220k
RV1 20k
R1 82k
INPUT TP1
R13 120k
R2 1.5M
U1
TP27 +12V
R56 30k
C8 1uF
C7 330pF
R16 100k
TP28 GND
C12 100nF
U2 TL072
C13 100nF
TP29 -12V
V/oct in
Freq CV in
Res CV in
In2
In1
LP4 TP6
Gain 4
LP3 TP5
Gain 3
R4 1.2k
RV7 20k
330pF
C5
R14 82k
R15 220k
RV6 20k
R9 82k
R10 220k
R17 47k
R19 30k
R18 47k
R20 22k
+12V
1N5817 D1 K
C11 10uF C10 10uF
J10
1N5817 D2 K
FREQ CV
IN 1
C9 1uF
R58 1k
R57 100k
RED STRIPE
−12V
OUT
RES CV
V/OCT
IN 2