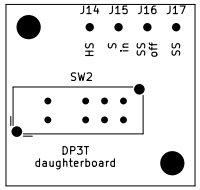
J14 J15 J16 J17
HS
S In
SS off
SS
SW2
DP3T
daughterboard

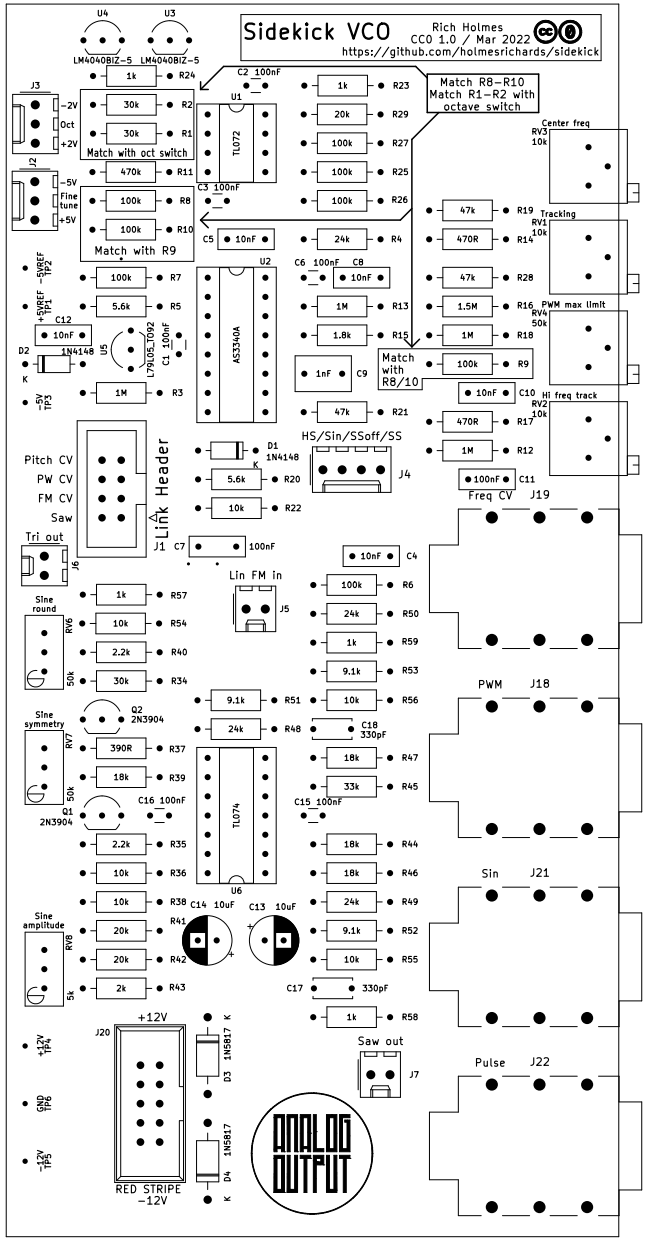
Sidekick VCO
Rich Holmes
CC0 1.0 / Mar 2022
https://github.com/holmesrichards/sidekick
U4
U3
LM4040BIZ-5
LM4040BIZ-5
J3
-2V
Oct
+2V
J2
-5V
Fine tune
+5V
Match with oct switch
Match with R9
Match R8-R10
Match R1-R2 with octave switch
Match with R8/10
C2 100nF
C3 100nF
U1
TL072
U2
AS3340A
U5
L79L05_TO92
C1 100nF
C12 10nF
D2 1N4148
-5V TP3
+5VREF TP1
-5VREF TP2
Center freq
RV3 10k
Tracking
RV1 10k
PWM max limit
RV4 50k
Hi freq track
RV2 10k
HS/Sin/SSoff/SS
J4
D1 1N4148
Freq CV
J19
Pitch CV
PW CV
FM CV
Saw
J1
Link Header
Tri out
J6
Lin FM in
J5
C7 100nF
C4 10nF
Sine round
RV6 50k
Sine symmetry
RV7 50k
Q2 2N3904
Q1 2N3904
C16 100nF
C18 330pF
C15 100nF
TL074
U6
PWM
J18
Sin
J21
Sine amplitude
RV8 5k
C14 10uF
C13 10uF
C17 330pF
Saw out
J7
Pulse
J22
+12V
J20
RED STRIPE
-12V
D3 1N5817
D4 1N5817
+12V TP4
GND TP6
-12V TP5
ANALOG OUTPUT