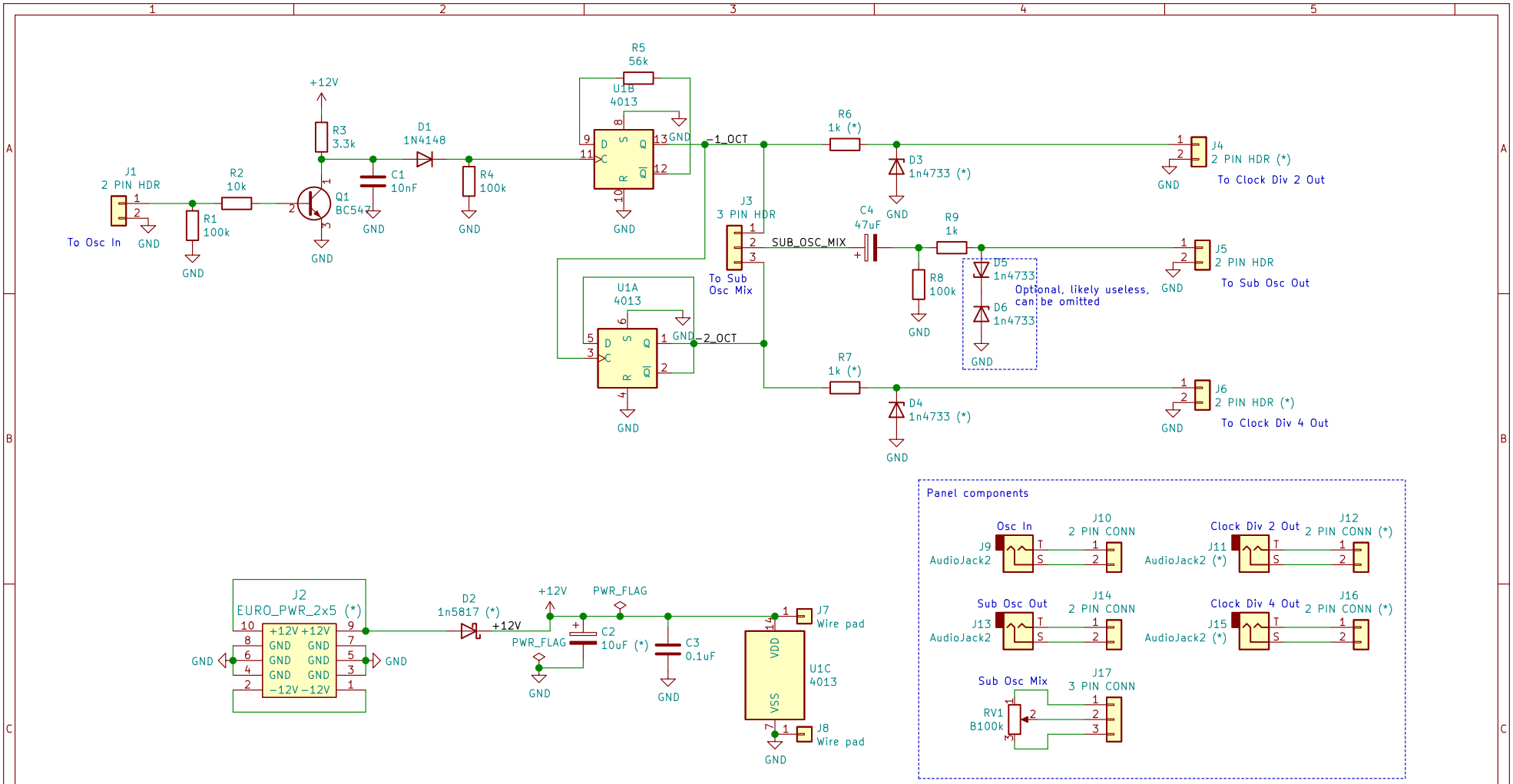

circuit design by Carmelo Azzarello

Rich Holmes / Analog Output

Sheet: /

File: Suboscillator.sch

Title: Suboscillator

Size: USLetter	Date: 2020-05-12	Rev:
KiCad E.D.A. kicad 5.1.6-c6e7f7d87ubuntu20.04.1		Id: 1/1