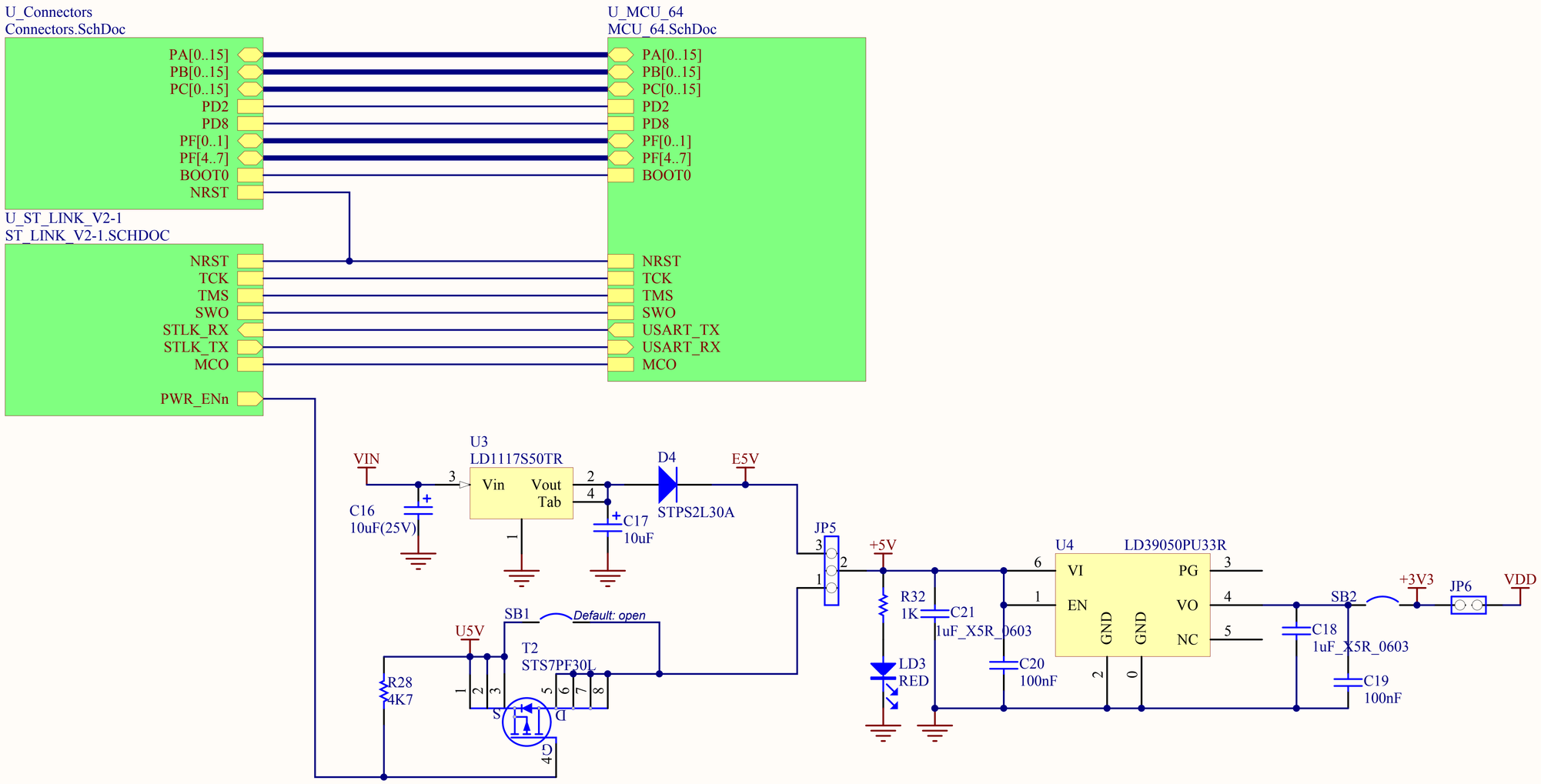

Note1: Text in italic placed on a wire doesn't correspond to net name. It just helps to identify rapidly Arduino's signal related to this wire.
Note2: Remove [N/A] on R34, R36, C31, C32 , X2 from C.1 to C.2
Note3: Add " default open" on SB48, SB49, SB55 from C.1 to C.2
Note4: Replace " default open" by" default closed" on SB16 & SB50 from C.1 to C.2
Note5: C26's value changed from 2.2uF to 4.7uF from C.2 to C.3

Title: **TOP & POWER**		
Project: **NUCLEO-XXXXRX**		
Size: A4	Reference: MB1136	Revision: C.3
Date: 6/16/2014		Sheet: 1 of 4

life.augmented

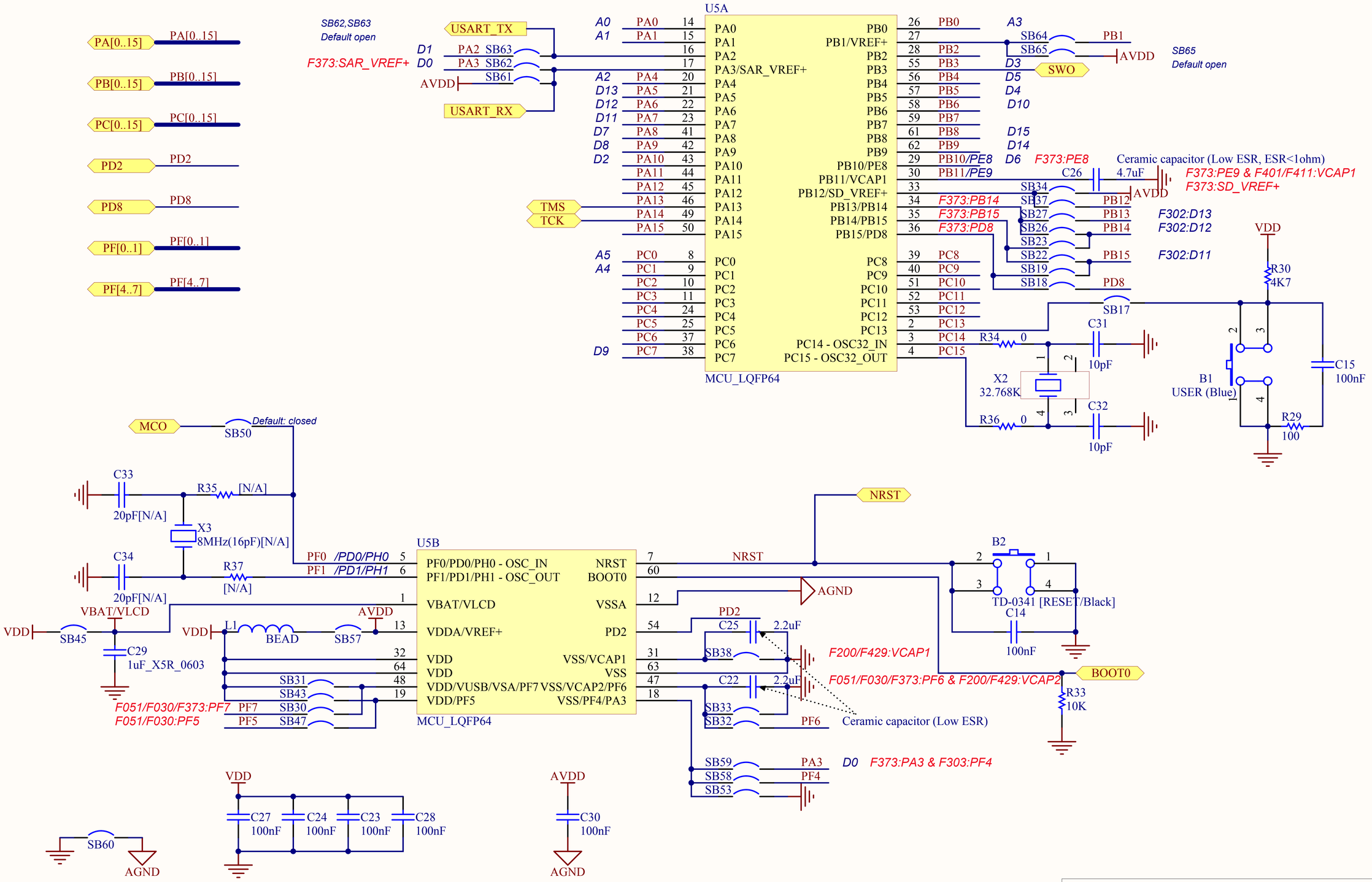

Title: **MCU**		
Project: **NUCLEO-XXXXRX**		
Size: A4	Reference: MB1136	Revision: C.3
Date: 6/16/2014		Sheet: 2 of 4

life.augmented

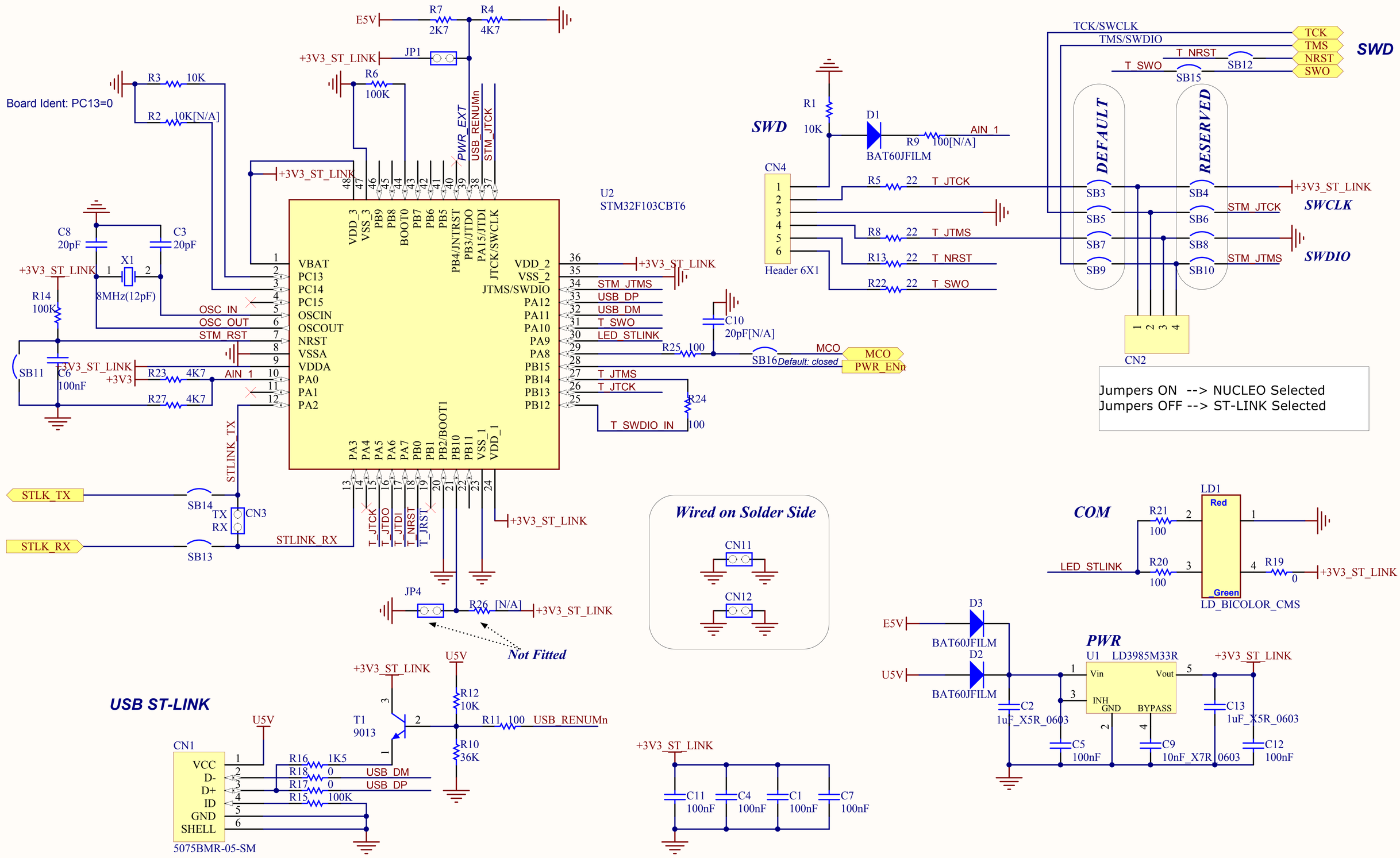

Title: **STLINK/V2-1**		
Project: **NUCLEO-XXXXRX**		
Size: A4	Reference: MB1136	Revision: C.3
Date: 6/16/2014		Sheet: 3 of 4

life.augmented

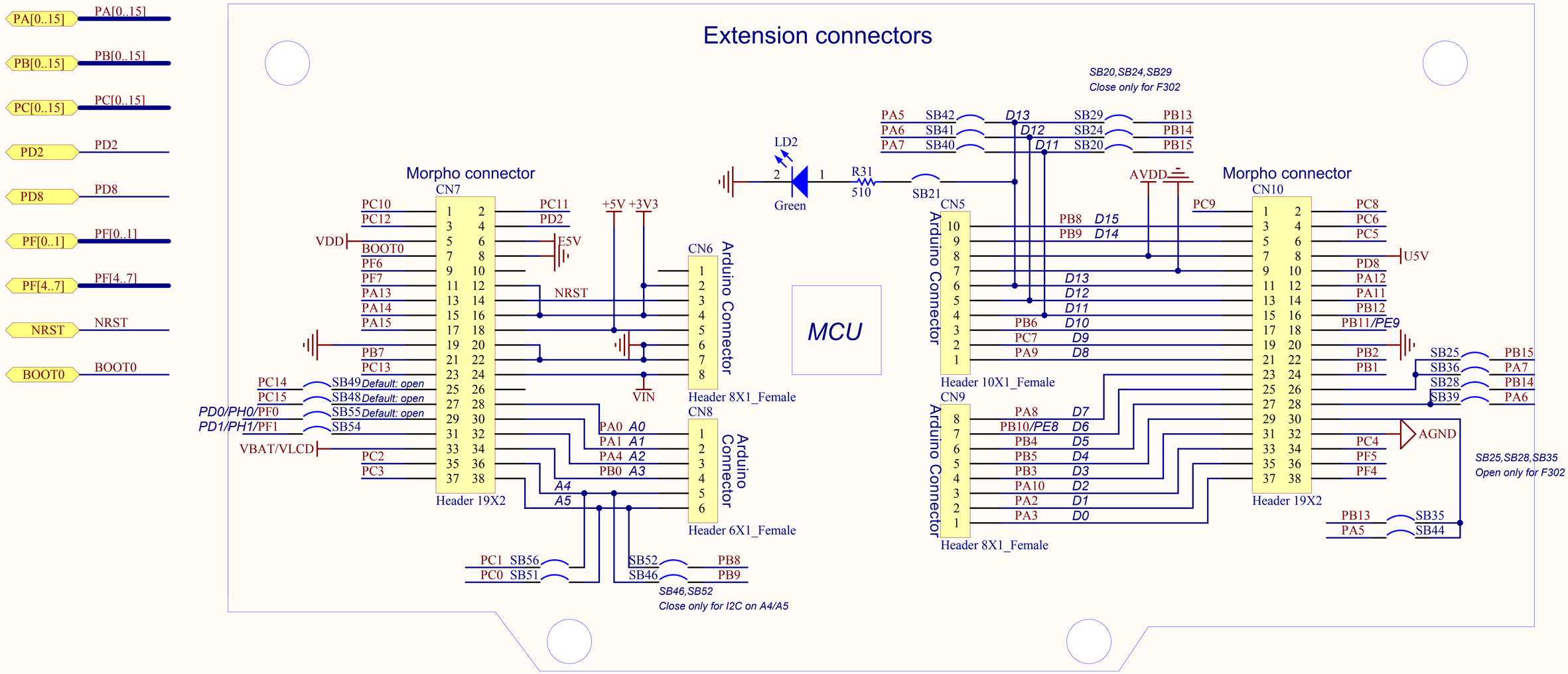

Title: **Extension connectors**		
Project: **NUCLEO-XXXXRX**		
Size: A4	Reference: MB1136	Revision: C.3
Date: 6/16/2014		Sheet: 4 of 4