Determination of Transformer equivalent circuit from Open Circuit and Short Circuit Test.

1. Open Circuit Test :

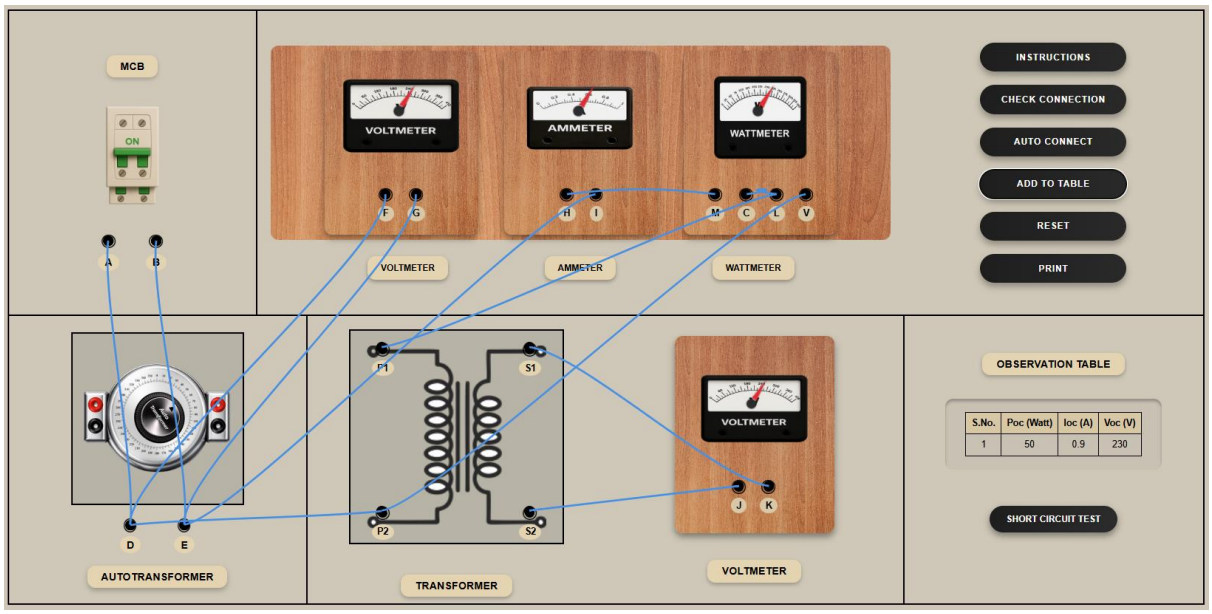

2. Short Circuit Test :

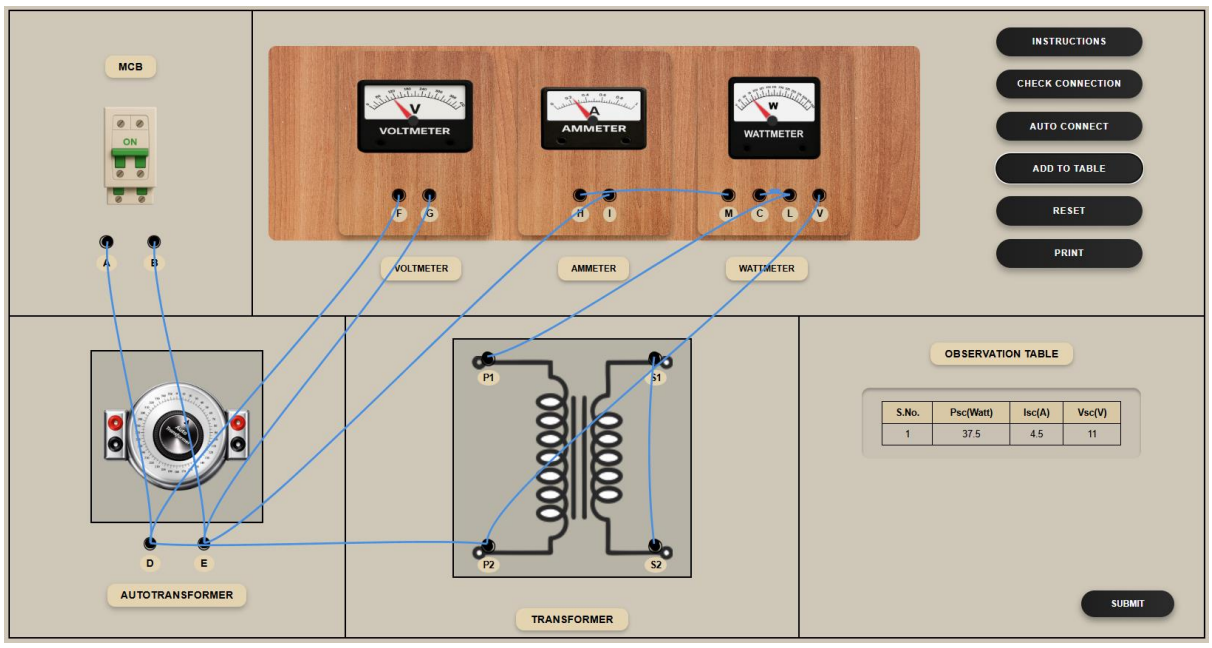
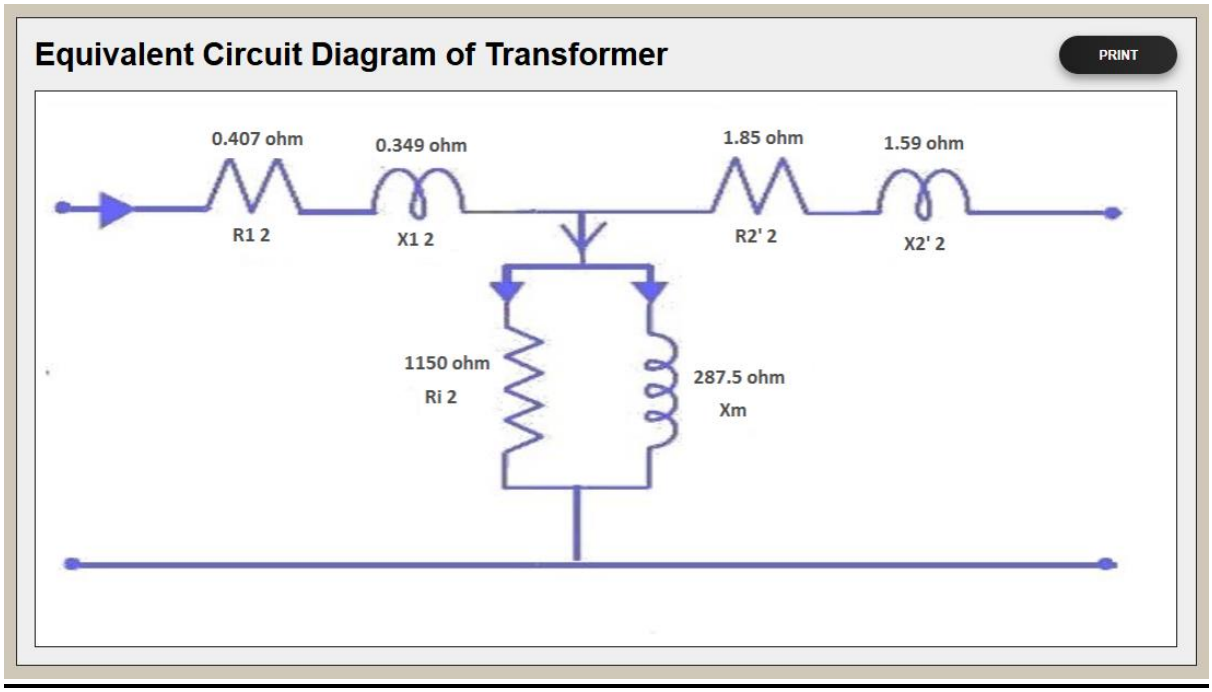
Determination of Transformer equivalent circuit from Open Circuit and Short Circuit Test.